STEVES AND SONS
203 Humble Ave.
San Antonio, TX 78225

Veranda Glazed Steel Single Door w/ or w/o SIDELITES

INSWING / OUTSWING "NON-IMPACT"

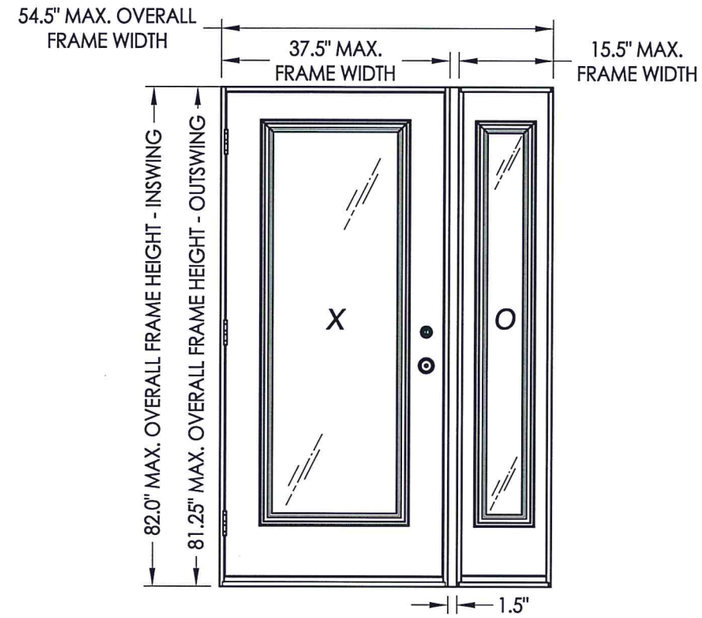

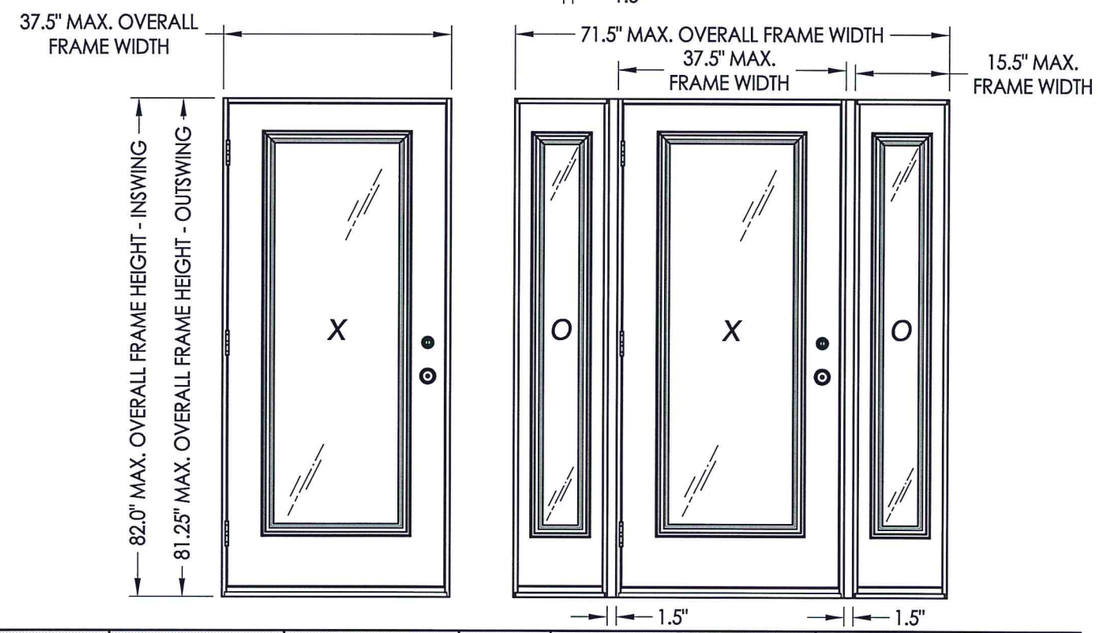

EVALUATED FOR USE IN THE STATE OF TEXAS

The Fiberglass Door described herein complies with the 2006 International Residential Code (IRC), Sections R301 & R613 and the 2006 International Building Code (IBC), Sections 1405.12, 1609, 1714.5, 2403 and 2404 (including Texas revisions) subject to the following conditions:

1. Anchors shall be as listed and spaced as shown in the details. Anchor embedment to base material shall be beyond wall dressing or stucco.
2. When used in areas requiring wind-borne debris protection this product is required to be protected with an impact resistant covering that complies with Section R301.2.1.2 of the IRC and Section 1609.1.2 of the IBC.
3. Allowable design pressure requirements must be equal to or less than the design pressure rating shown in the design pressure chart, sheet 1 of this drawing.
4. Conditions not covered by this drawing are subject to further engineering analysis.

SUPPORTING DOCUMENTS & EVIDENCE

1. Testing per AAMA/WDMA/CSA 101/I.S.2/A440-05 :
   Testing Evaluation Laboratories, Inc. test report(s) #: TEL 01520035 and TEL 01520140.
2. Calculations (Anchoring and Glass load resistance report ASTM E1300-04) prepared by Lyndon F. Schmidt, P.E.
3. Certificate of Participation issued by the National Accreditation and Management Institute, Inc., certifying that STEVES AND SONS is manufacturing products within a Quality Assurance program.

TABLE OF CONTENTS

SHEET #	DESCRIPTION
1	Typical elevations, design pressures & general notes
2	Door panel & glazing details
3	Sidelite panel & glazing details
4	Elevations
5	Horizontal cross sections
6	Vertical cross sections
7	Vertical cross sections
8	Frame anchoring
9	Frame anchoring
10	Components and bill of materials

CONFIGURATION	MAX. FRAME DIMENSION	MAX. SIDELITE D.L.O. DIMENSION	GLASS TYPE	DESIGN PRESSURE (PSF) INSWING		DESIGN PRESSURE (PSF) OUTSWING	
				POSITIVE	NEGATIVE	POSITIVE	NEGATIVE
X	37.5" x 82.0"	21.0" x 63.0"	G1	+30.0	-35.0	+30.0	-30.0
OX / XO	54.5" x 82.0"	21.0" x 63.0"		+30.0	-35.0	+30.0	-30.0
OXO	71.5" x 82.0"	21.0" x 63.0"		+30.0	-35.0	+30.0	-30.0

STATE OF TEXAS
LYNDON F. SCHMIDT
104123
LICENSED PROFESSIONAL ENGINEER
7-22-15

Documents Prepared By: Lyndon F. Schmidt, P.E.
TEXAS P.E. #104123
RW BUILDING CONSULTANTS, INC.
P.O. Box 230 Valrico FL. 33595
Phone No.: 813.659.9197
TEXAS BOARD OF PROFESSIONAL ENGINEERS
CERTIFICATE OF REGISTRATION # F-11852

PRODUCT: STEVES AND SONS STEEL DOOR

PART OR ASSEMBLY: TYPICAL ELEVATIONS, DESIGN PRESSURES & GENERAL NOTES

REVISIONS

NO.	DATE	Manuf./Product Name Change	BY
1	7/16/15		JK

DATE: 5/24/10
SCALE: N.T.S.
DWG. BY: JK
CHK. BY: LFS
DRAWING NO.: TX-4096
SHEET 1 OF 10

© 2010 R.W. BUILDING CONSULTANTS INC.

R:\Clients\Steves and Sons - Permanent\Texas Dept of Ins\TX-4096-97.dwg, TX-4096

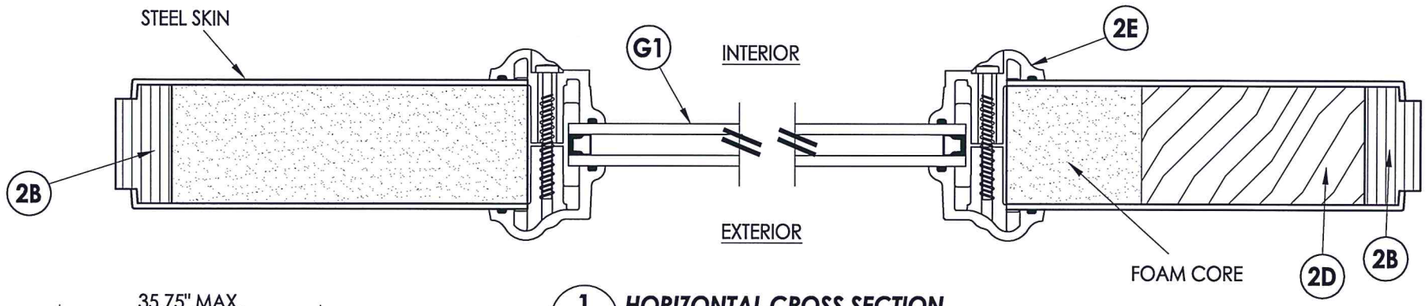

1/2 **HORIZONTAL CROSS SECTION**

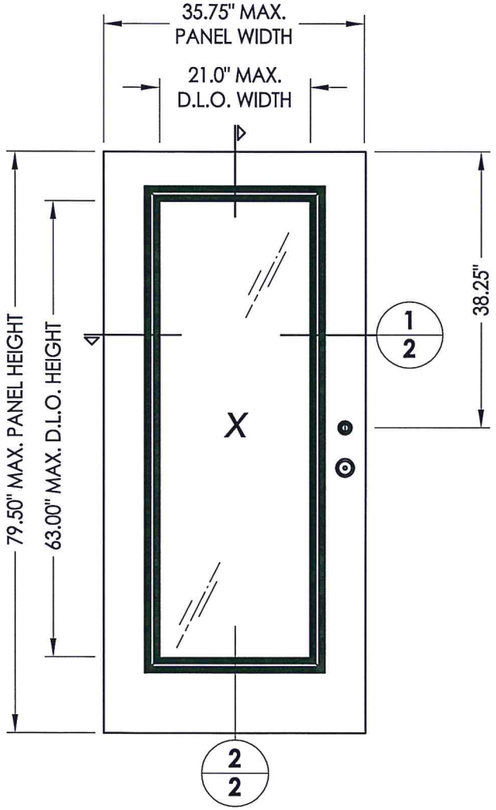

40 **DOOR PANEL**
Steel

STEEL DOOR SKIN: MIN. 0.019" THK.
CORE MATERIAL: EPS FOAM (POLYSTYRENE)

NOTE:
1. Spacing for lite frame screws is as follows:
Sides: 4.5" from corners and 11.5" o.c. thereafter
Top & Bottom: 4.5" from corners and @ centerline.

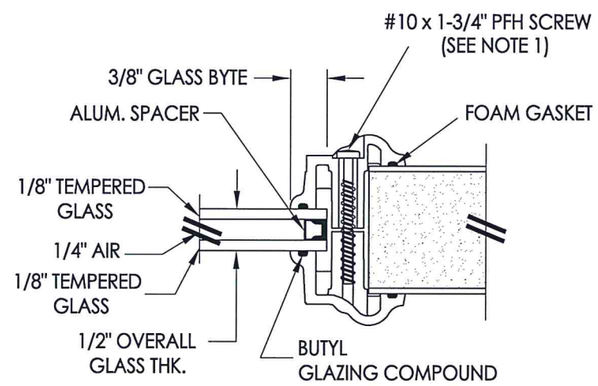

G1 **GLAZING DETAIL**
ODL Lite Frame

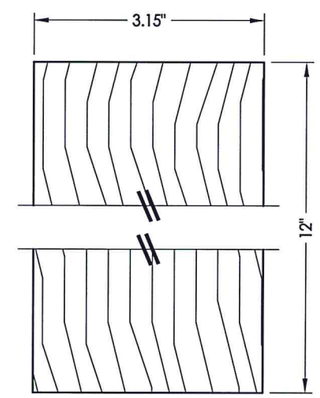

2D **LOCK BLOCK**
Wood (S.G.>= 0.42)

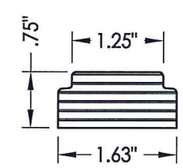

2A **TOP RAIL**
LVL

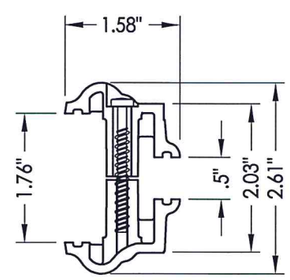

2E **ODL LITE FRAME**
HP Polypropylene

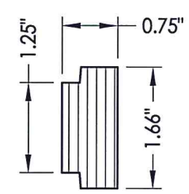

2B **HINGE & LATCH STILE**
LVL

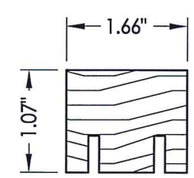

2C **BOTTOM RAIL**
Wood (S.G.>= 0.42)

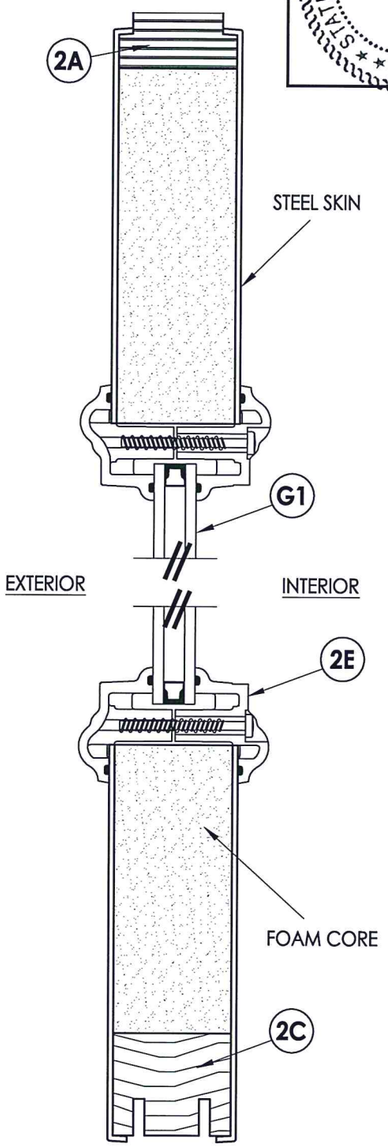

2/2 **VERTICAL CROSS SECTION**

STATE OF TEXAS
LYNDON F. SCHMIDT
104123
LICENSED PROFESSIONAL ENGINEER
7-22-15

Documents Prepared By: Lyndon F. Schmidt, P.E.
TEXAS P.E. #104123
RW BUILDING CONSULTANTS, INC.
P.O. Box 230 Valrico FL. 33595
Phone No.: 813.659.9197
TEXAS BOARD OF PROFESSIONAL ENGINEERS
CERTIFICATE OF REGISTRATION # F-11852

PRODUCT: STEVES AND SONS STEEL DOOR

PART OR ASSEMBLY: DOOR PANEL & GLAZING DETAILS

REVISIONS

NO.	DATE	Manuf./Product Name Change	BY
1	7/16/15		JK

DATE: 5/24/10
SCALE: N.T.S.
DWG. BY: JK
CHK. BY: LFS
DRAWING NO.: TX-4096
SHEET 2 OF 10

© 2010 R.W. BUILDING CONSULTANTS INC.

R:\Clients\Steves and Sons - Permanent\Texas Dept of Ins\TX-4096-97.dwg, 3-2

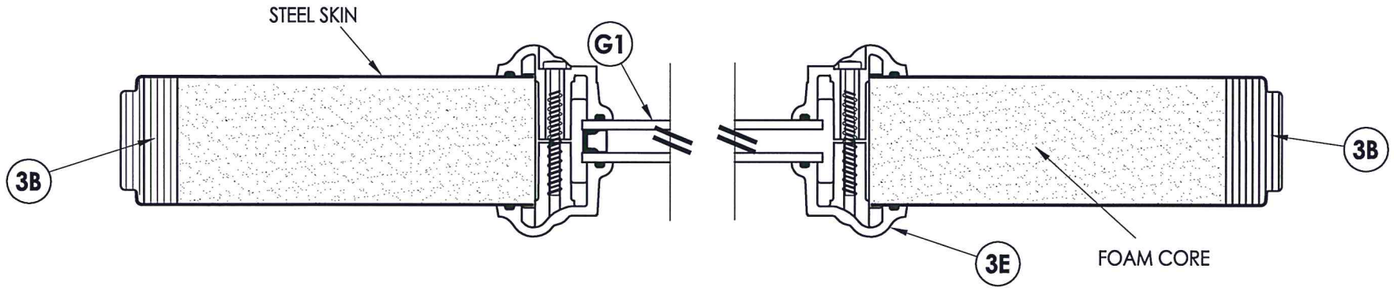

1/3 **HORIZONTAL CROSS SECTION**

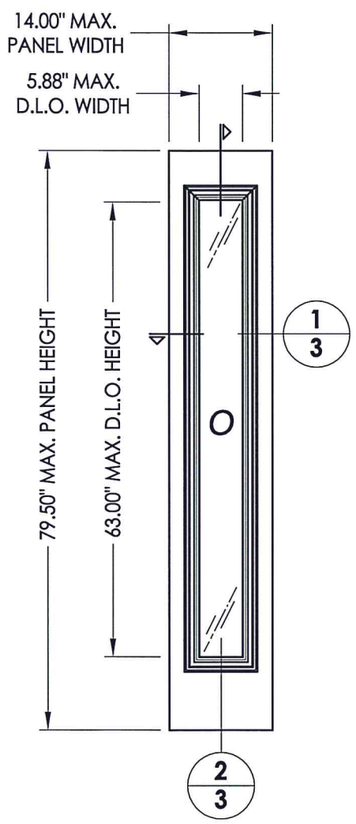

50 **SIDELITE PANEL**
Steel

STEEL DOOR SKIN: MIN. 0.019" THK.
CORE MATERIAL: EPS FOAM (POLYSTYRENE)

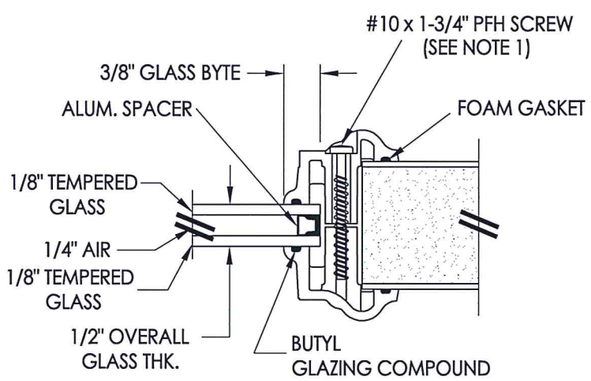

G1 **GLAZING DETAIL**
ODL Lite Frame

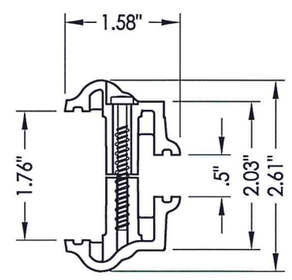

3E **ODL LITE FRAME**
HP Polypropylene

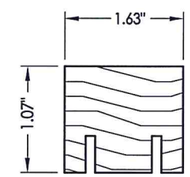

3C **BOTTOM RAIL**
Wood (S.G.>= 0.42)

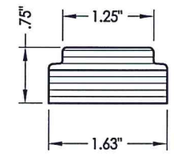

3A **TOP RAIL**
LVL

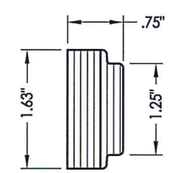

3B **HINGE & LATCH STILE**
LVL

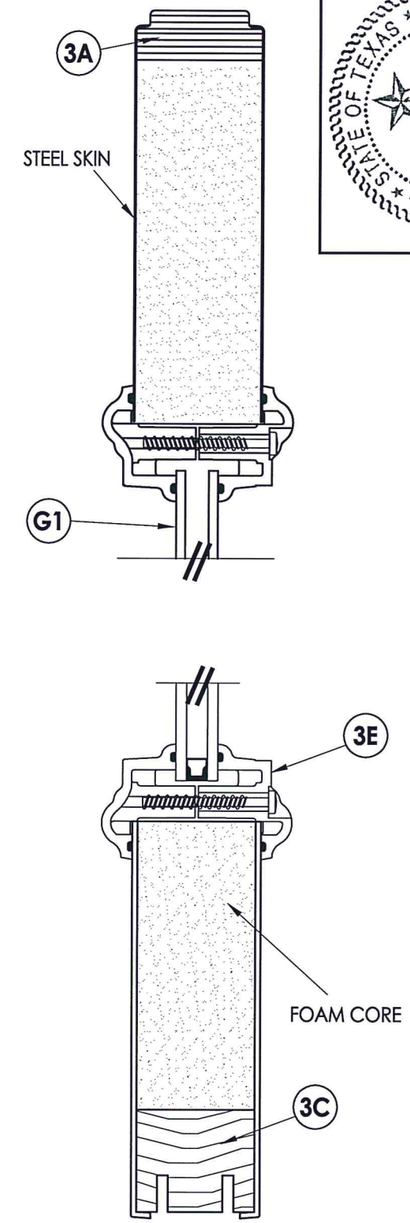

2/3 **VERTICAL CROSS SECTION**

NOTE:
1. Spacing for lite frame screws is as follows:
   Sides: 4.5" from corners and 11.5" o.c. thereafter
   Top & Bottom: 2" from corners.

STATE OF TEXAS
LYNDON F. SCHMIDT
104123
LICENSED PROFESSIONAL ENGINEER
7-22-15

Documents Prepared By: Lyndon F. Schmidt, P.E.
TEXAS P.E. #104123
RW BUILDING CONSULTANTS, INC.
P.O. Box 230 Valrico FL. 33595
Phone No.: 813.659.9197
TEXAS BOARD OF PROFESSIONAL ENGINEERS
CERTIFICATE OF REGISTRATION # F-11852

PRODUCT: STEVES AND SONS STEEL DOOR

PART OR ASSEMBLY: SIDELITE PANEL & GLAZING DETAILS

REVISIONS

NO.	DATE	Manuf./Product Name Change	BY
1	7/16/15		JK

DATE: 5/24/10
SCALE: N.T.S.
DWG. BY: JK
CHK. BY: LFS
DRAWING NO.: TX-4096
SHEET 3 OF 10

© 2010 R.W. BUILDING CONSULTANTS INC.

R:\Clients\Steves and Sons - Permanent\Texas Dept of Ins\TX-4096-97.dwg, 3-3

HARDWARE CHART		
MANUFACTURER	MODEL	ITEM #
KWIKSET	LOCK: 200	17
	DEADBOLT: 600	18

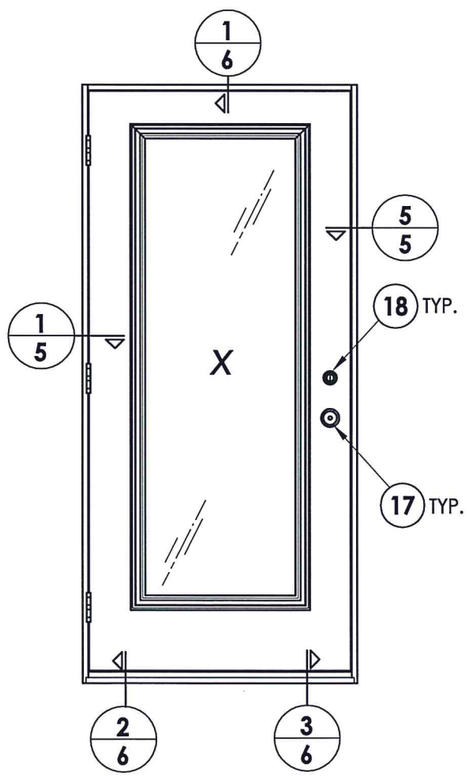

ELEVATION (X)

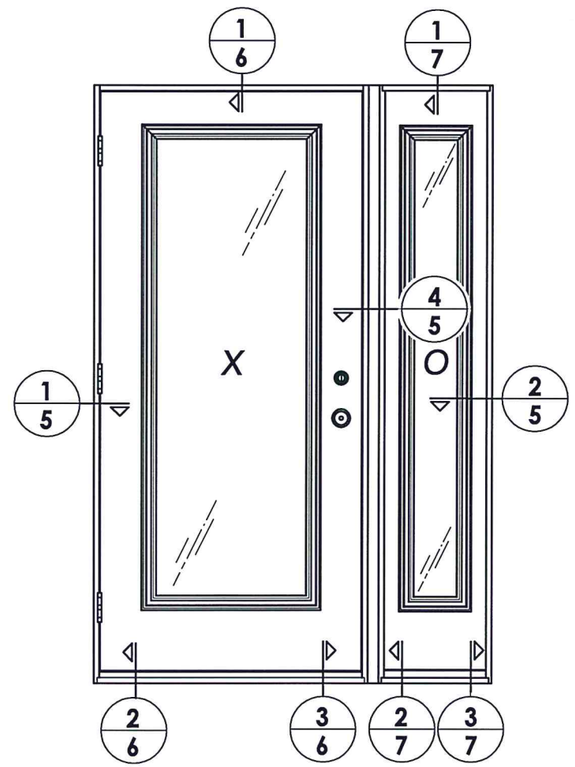

ELEVATION (XO / OX)

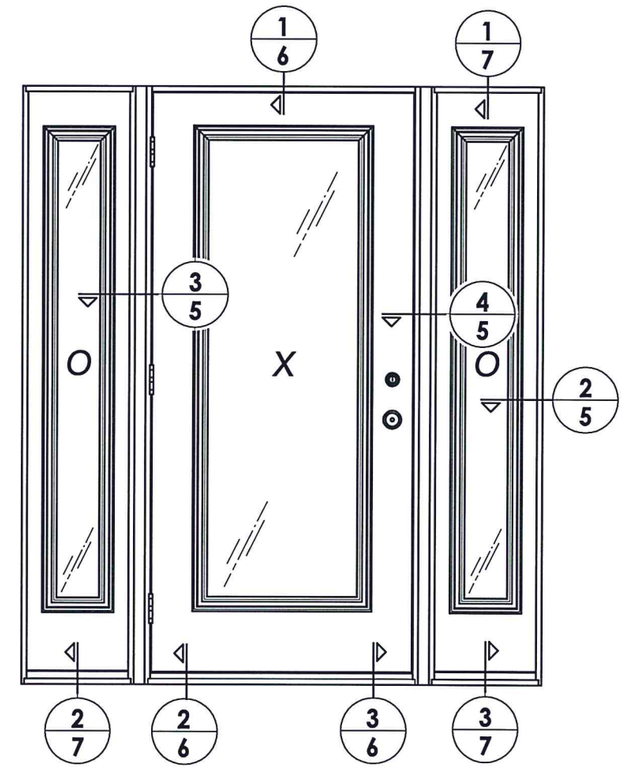

ELEVATION (OXO)

STATE OF TEXAS
LYNDON F. SCHMIDT
104123
LICENSED
PROFESSIONAL ENGINEER

7.22.15

Documents Prepared By: Lyndon F. Schmidt, P.E.
TEXAS P.E. #104123

RW BUILDING CONSULTANTS, INC.
P.O. Box 230 Valrico FL. 33595
Phone No.: 813.659.9197

TEXAS BOARD OF PROFESSIONAL ENGINEERS
CERTIFICATE OF REGISTRATION # F-11852

PRODUCT: STEVES AND SONS STEEL DOOR

PART OR ASSEMBLY: ELEVATIONS

REVISIONS

NO.	DATE		BY
1	7/16/15	Manuf./Product Name Change	JK

DATE: 5/24/10
SCALE: N.T.S.
DWG. BY: JK
CHK. BY: LFS
DRAWING NO.: TX-4096
SHEET 4 OF 10

© 2010 R.W. BUILDING CONSULTANTS INC.

R:\Clients\Steves and Sons - Permanent\Texas Dept of Ins\TX-4096-97.dwg, 3-4

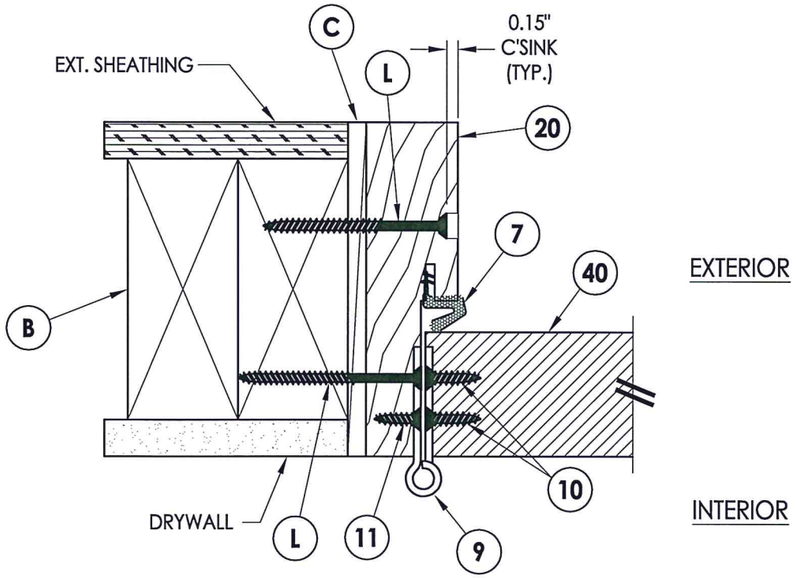

1/5 **HORIZONTAL CROSS SECTION**
Inswing shown - outswing also approved

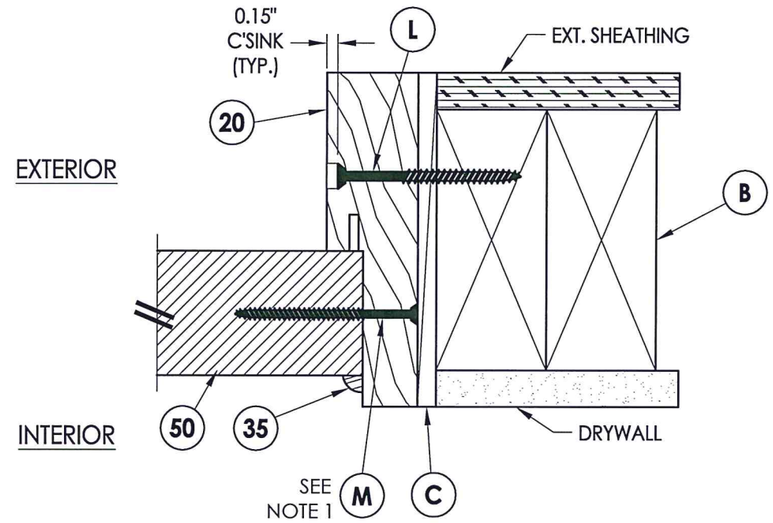

2/5 **HORIZONTAL CROSS SECTION**
Inswing shown - outswing also approved

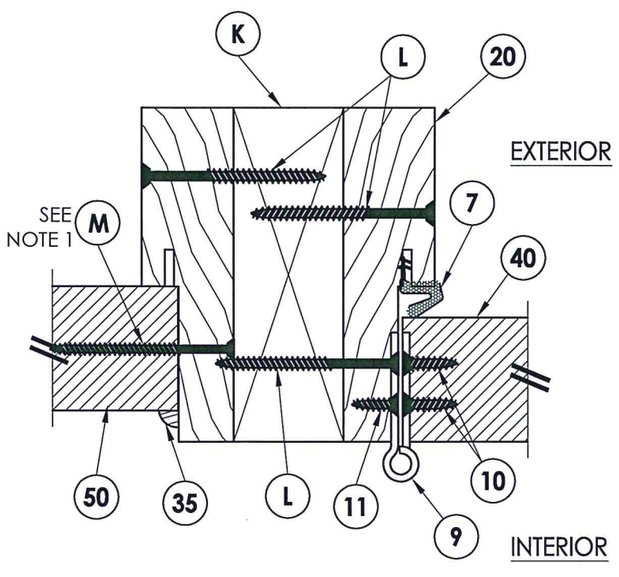

3/5 **HORIZONTAL CROSS SECTION**
Inswing shown - outswing also approved

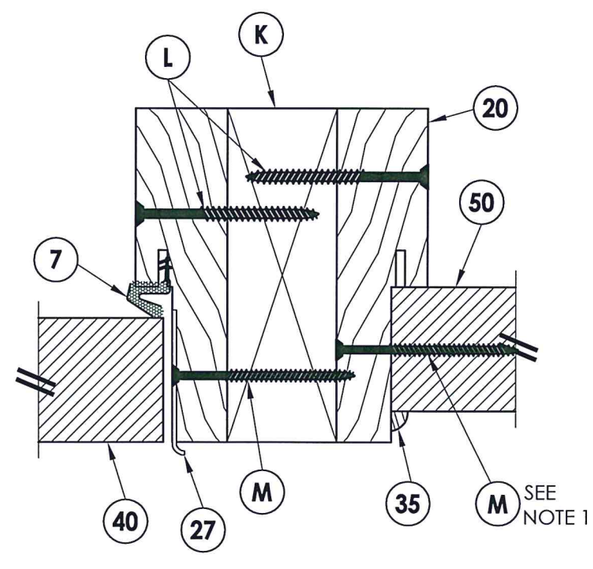

4/5 **HORIZONTAL CROSS SECTION**
Inswing shown - outswing also approved

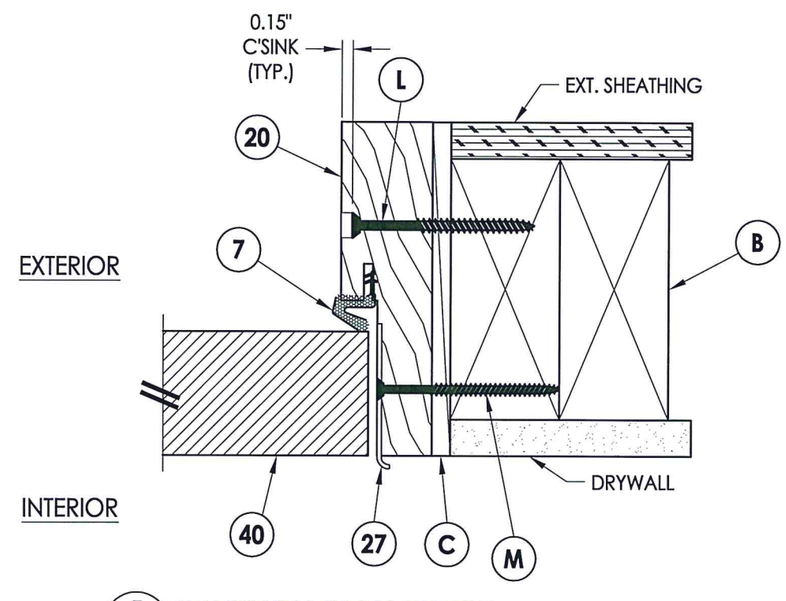

5/5 **HORIZONTAL CROSS SECTION**
Inswing shown - outswing also approved

STATE OF TEXAS
LYNDON F. SCHMIDT
104123
LICENSED
PROFESSIONAL ENGINEER

NOTE:

1. Sidelite ass'y fasteners located 6" from each end and 6 more screws equally spaced between (8 screws total per jamb).

Documents Prepared By: Lyndon F. Schmidt, P.E.
TEXAS P.E. #104123
RW BUILDING CONSULTANTS, INC.
P.O. Box 230 Valrico FL. 33595
Phone No.: 813.659.9197
TEXAS BOARD OF PROFESSIONAL ENGINEERS
CERTIFICATE OF REGISTRATION # F-11852

PRODUCT: STEVES AND SONS STEEL DOOR

PART OR ASSEMBLY: HORIZONTAL CROSS SECTIONS

NO.	DATE	REVISIONS	BY
1	7/16/15	Manuf./Product Name Change	JK

DATE: 5/24/10
SCALE: N.T.S.
DWG. BY: JK
CHK. BY: LFS
DRAWING NO.: TX-4096
SHEET 5 OF 10

© 2010 R.W. BUILDING CONSULTANTS INC.

R:\Clients\Steves and Sons - Permanent\Texas Dept of Ins\TX-4096-97.dwg, 3-5

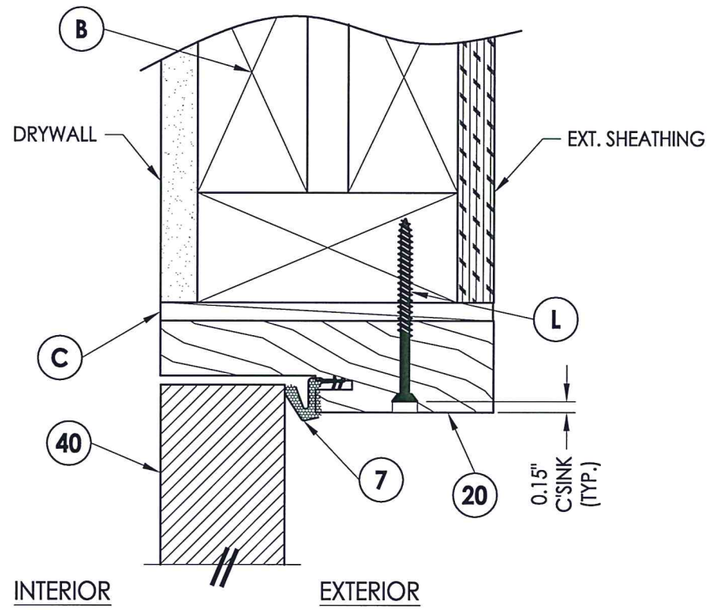

1/6 **VERTICAL CROSS SECTION**
Inswing shown - outswing also approved

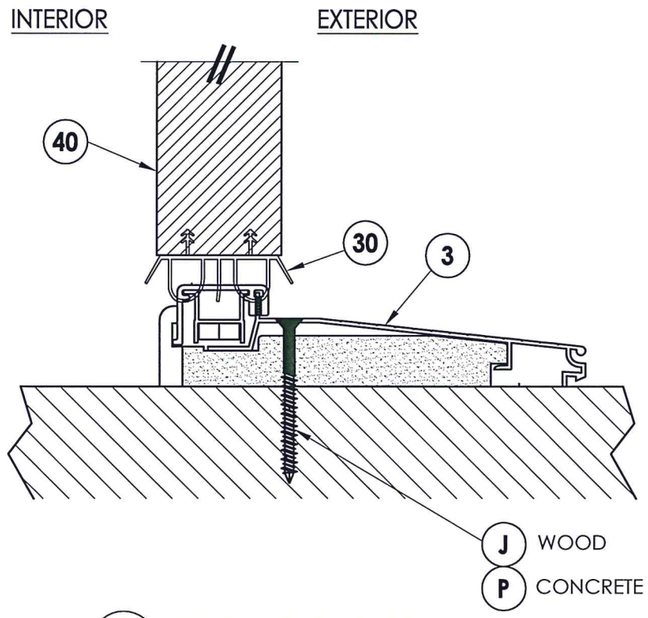

2/6 **VERTICAL CROSS SECTION**
Inswing configuration

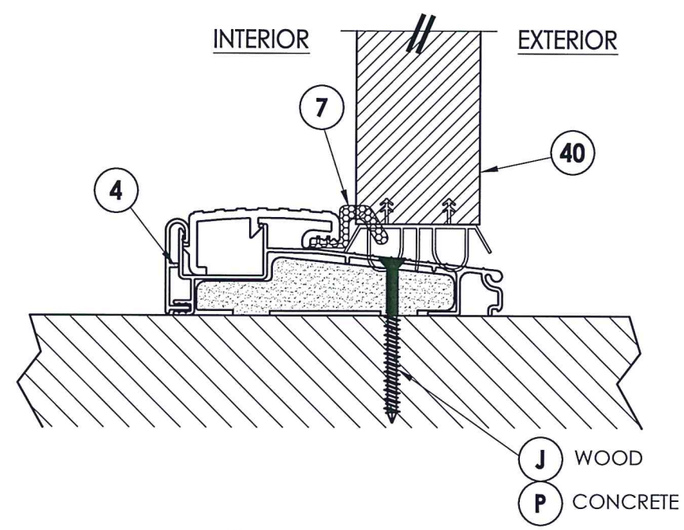

3/6 **VERTICAL CROSS SECTION**
Outswing configuration

STATE OF TEXAS
LYNDON F. SCHMIDT
104123
LICENSED PROFESSIONAL ENGINEER
7.22.15

Documents Prepared By: Lyndon F. Schmidt, P.E.
TEXAS P.E. #104123
R.W. BUILDING CONSULTANTS, INC.
P.O. Box 230 Valrico FL. 33595
Phone No.: 813.659.9197
TEXAS BOARD OF PROFESSIONAL ENGINEERS
CERTIFICATE OF REGISTRATION # F-11852

PRODUCT: STEVES AND SONS STEEL DOOR

PART OR ASSEMBLY: VERTICAL CROSS SECTIONS

NO.	DATE	Manuf./Product Name Change	BY
1	7/16/15		JK

REVISIONS

DATE: 5/24/10
SCALE: N.T.S.
DWG. BY: JK
CHK. BY: LFS
DRAWING NO.: TX-4096
SHEET 6 OF 10

© 2010 R.W. BUILDING CONSULTANTS INC.

R:\Clients\Steves and Sons - Permanent\Texas Dept of Ins\TX-4096-97.dwg, 3-6

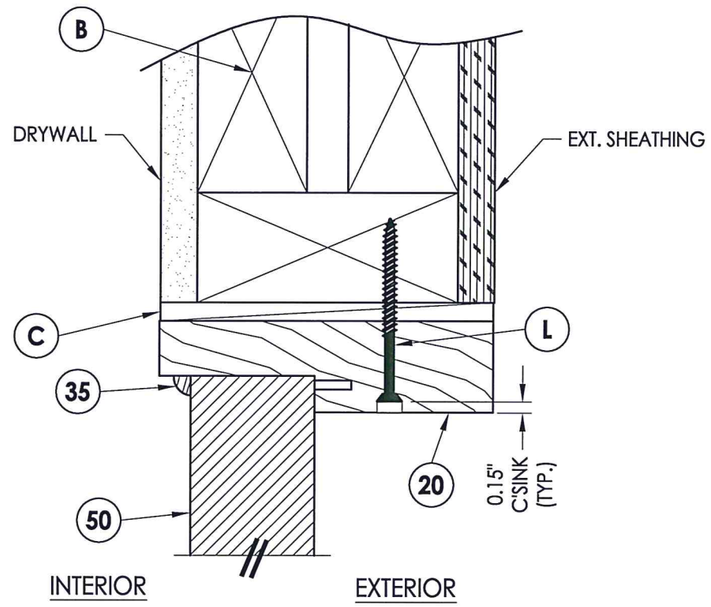

1/7 **VERTICAL CROSS SECTION**
Inswing shown - outswing also approved

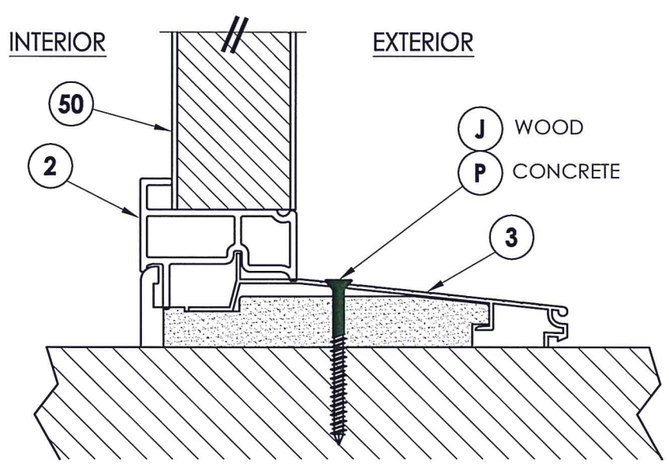

2/7 **VERTICAL CROSS SECTION**
Inswing configuration

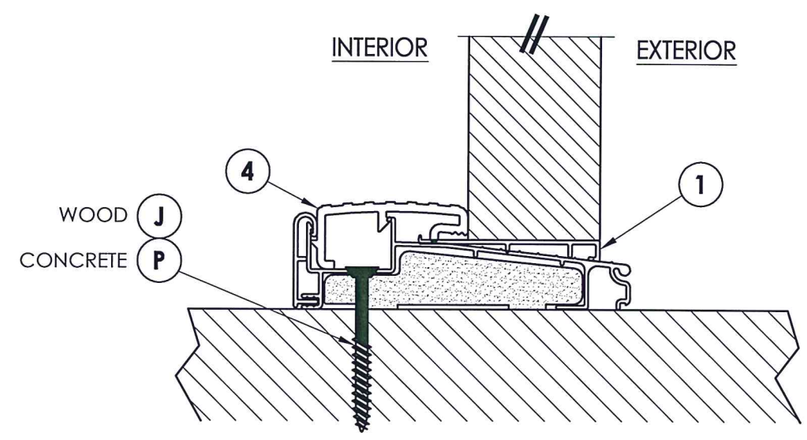

3/7 **VERTICAL CROSS SECTION**
Outswing configuration

STATE OF TEXAS
LYNDON F. SCHMIDT
104123
LICENSED PROFESSIONAL ENGINEER
7-22-15

Documents Prepared By: Lyndon F. Schmidt, P.E. TEXAS P.E. #104123

RW BUILDING CONSULTANTS, INC.
P.O. Box 230 Valrico FL. 33595
Phone No.: 813.659.9197

TEXAS BOARD OF PROFESSIONAL ENGINEERS CERTIFICATE OF REGISTRATION # F-11852

PRODUCT: STEVES AND SONS STEEL DOOR

PART OR ASSEMBLY: VERTICAL CROSS SECTIONS

NO.	DATE	Manuf./Product Name Change	BY
1	7/16/15		JK

REVISIONS

DATE: 5/24/10
SCALE: N.T.S.
DWG. BY: JK
CHK. BY: LFS
DRAWING NO.: TX-4096
SHEET 7 OF 10

© 2010 R.W. BUILDING CONSULTANTS INC.

R:\Clients\Steves and Sons - Permanent\Texas Dept of Ins\TX-4096-97.dwg, 3-7

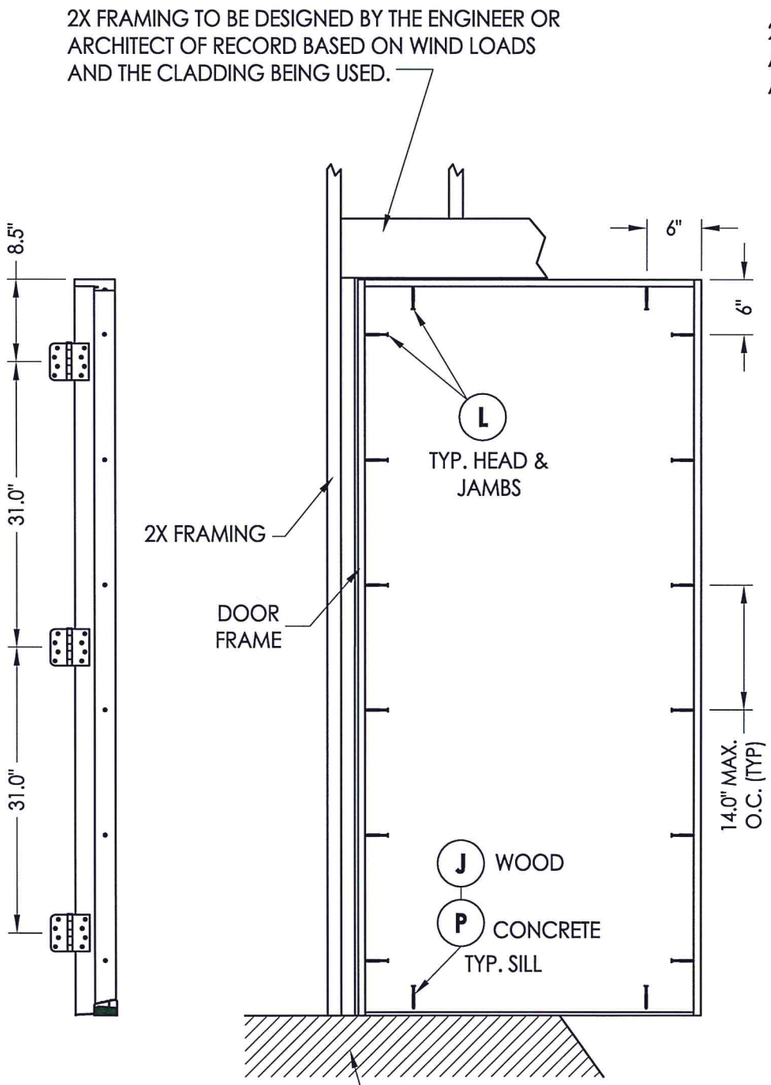

HINGE JAMB

FRAME ANCHORING
X

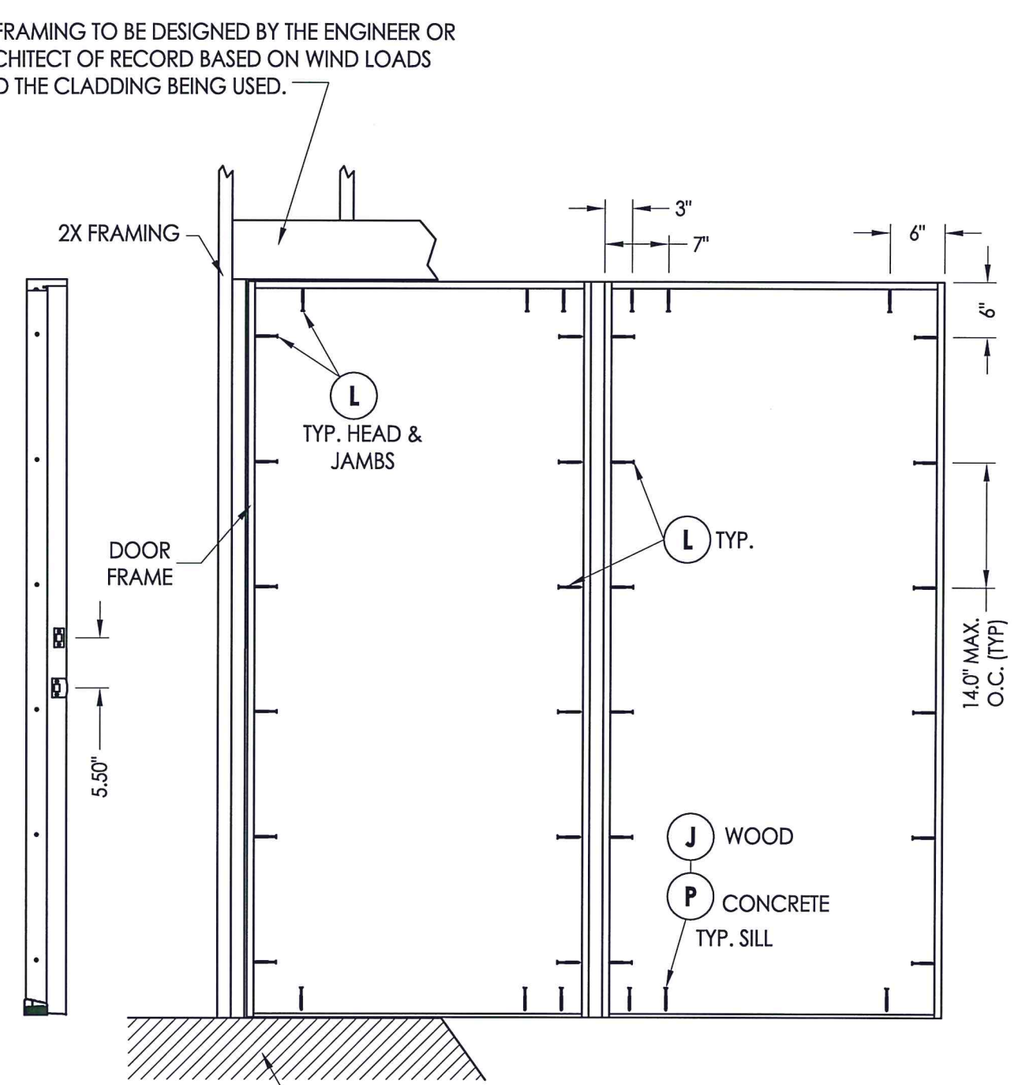

STRIKE JAMB

FRAME ANCHORING
XO / OX

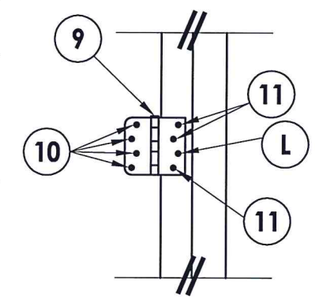

HINGE DETAIL

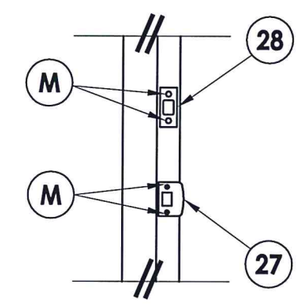

LATCH & DEADBOLT DETAIL

STATE OF TEXAS
LYNDON F. SCHMIDT
104123
LICENSED PROFESSIONAL ENGINEER
7.22.15

Documents Prepared By: Lyndon F. Schmidt, P.E.
TEXAS P.E. #104123
RW BUILDING CONSULTANTS, INC.
P.O. Box 230 Valrico FL. 33595
Phone No.: 813.659.9197
TEXAS BOARD OF PROFESSIONAL ENGINEERS
CERTIFICATE OF REGISTRATION # F-11852

PRODUCT: STEVES AND SONS STEEL DOOR

PART OR ASSEMBLY: FRAME ANCHORING

REVISIONS

NO.	DATE	Manuf./Product Name Change	BY
1	7/16/15		JK

DATE: 5/24/10
SCALE: N.T.S.
DWG. BY: JK
CHK. BY: LFS
DRAWING NO.: TX-4096
SHEET 8 OF 10

© 2010 R.W. BUILDING CONSULTANTS INC.

R:\Clients\Steves and Sons - Permanent\Texas Dept of Ins\TX-4096-97.dwg, 3-8

2X FRAMING TO BE DESIGNED BY THE ENGINEER OR ARCHITECT OF RECORD BASED ON WIND LOADS AND THE CLADDING BEING USED.

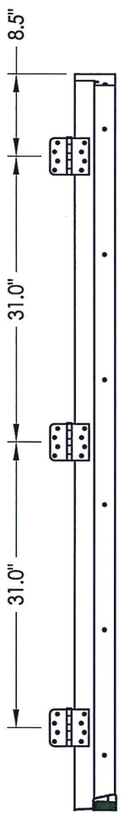

HINGE JAMB

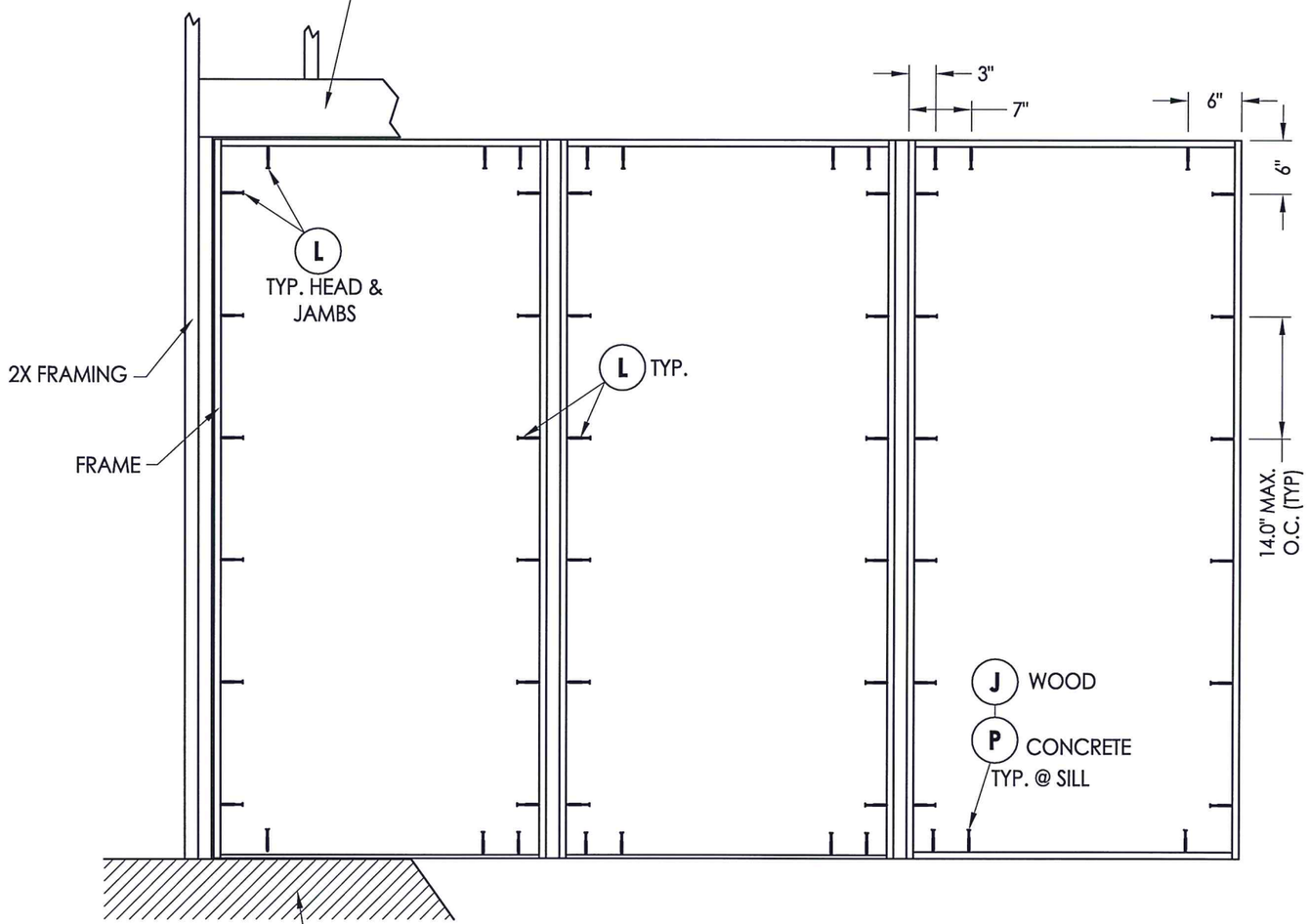

FRAME ANCHORING
OXO

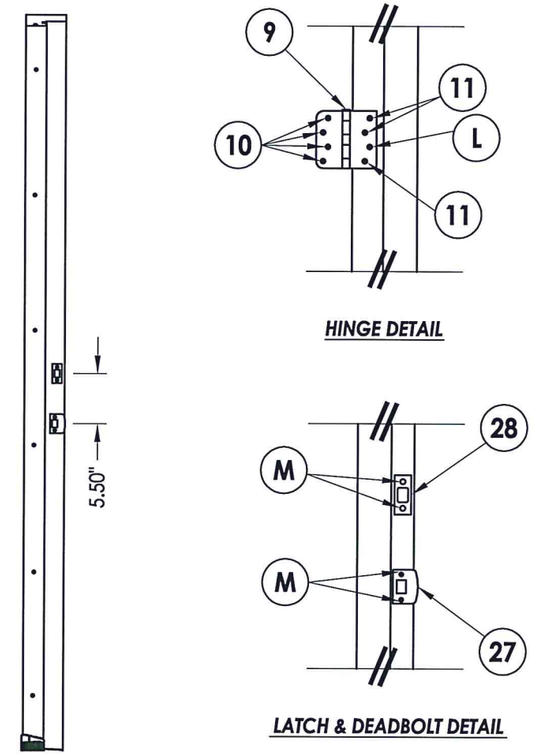

STRIKE JAMB

HINGE DETAIL

LATCH & DEADBOLT DETAIL

STATE OF TEXAS
LYNDON F. SCHMIDT
104123
LICENSED
PROFESSIONAL ENGINEER
7.22.15

Documents Prepared By: Lyndon F. Schmidt, P.E.
TEXAS P.E. #104123

RW BUILDING CONSULTANTS, INC.
P.O. Box 230 Valrico FL. 33595
Phone No.: 813.659.9197

TEXAS BOARD OF PROFESSIONAL ENGINEERS
CERTIFICATE OF REGISTRATION # F-11852

PRODUCT: STEVES AND SONS STEEL DOOR

PART OR ASSEMBLY: FRAME ANCHORING

NO.	DATE	Manuf./Product Name Change	BY
1	7/16/15		JK

REVISIONS

DATE: 5/24/10
SCALE: N.T.S.
DWG. BY: JK
CHK. BY: LFS
DRAWING NO.: TX-4096
SHEET 9 OF 10

© 2010 R.W. BUILDING CONSULTANTS INC.

R:\Clients\Steves and Sons - Permanent\Texas Dept of Ins\TX-4096-97.dwg, 3-9

BILL OF MATERIALS

ITEM #	DESCRIPTION	MATERIAL
B	2X FRAMING SG >= 0.42	WOOD
C	1/4" MAX. SHIM SPACE	-
J	#10 X 3" PFH WOOD SCREW	STEEL
K	2X REINFORCEMENT (CLEAR PINE SG >= 0.42)	WOOD
L	#10 X 2-1/2" PFH WOOD SCREW	STEEL
M	#8 X 2-1/2" PFH WOOD SCREW	STEEL
P	1/4" PFH ELCO OR ITW CONCRETE SCREW (1-3/4" MIN. EMB.)	STEEL
1	SIDELITE SPACER - OUTSWING	-
2	SIDELITE SPACER - INSWING	-
3	INSWING THRESHOLD ALUMINUM W/ COMPOSITE SUBSTRATE	ALUM/COMP.
4	OUTSWING THRESHOLD ALUMINUM W/ COMPOSITE SUBSTRATE	ALUM/COMP.
7	WEATHERSTRIP BY Q-LON	FOAM
9	4" HINGE	STEEL
10	#9 X 1" PFH WOOD SCREW	STEEL
11	#9 X 5/8" PFH WOOD SCREW	STEEL
20	JAMB FINGER - JOINT - PINE (SG >= 0.42)	WOOD
27	LATCH STRIKE PLATE	STEEL
28	DEADBOLT PLATE	STEEL
30	DOOR SWEEP	PVC
35	QUARTER ROUND	WOOD
40	DOOR PANEL - SEE DOOR PANEL DETAIL SHEET FOR CONSTRUCTION DETAILS	-
50	SIDELITE PANEL - SEE SIDELITE PANEL DETAIL SHEET FOR CONSTRUCTION DETAILS	-

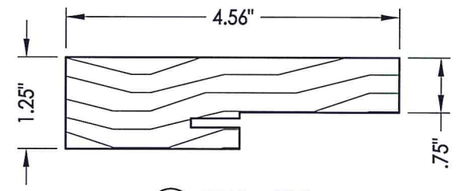

20 **HEAD & SIDE** Jamb

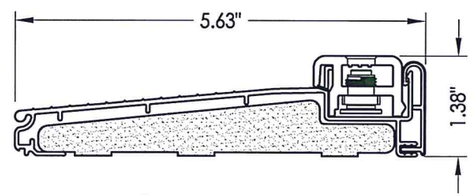

3 **INSWING THRESHOLD**

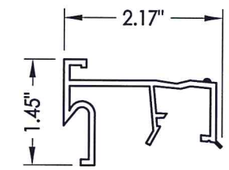

2 **SIDELITE SPACER** Inswing

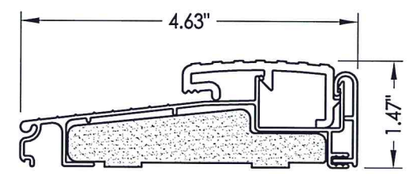

4 **OUTSWING THRESHOLD**

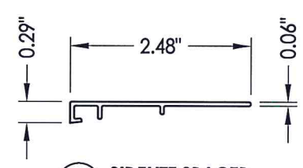

1 **SIDELITE SPACER** Outswing

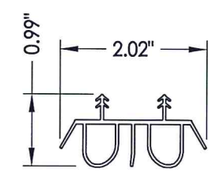

30 **SWEEP**

CONCRETE ANCHOR NOTES:

1. *Concrete anchor locations at the corners may be adjusted to maintain the min. edge distance to mortar joints.*
2. *Concrete anchor locations noted as "MAX. ON CENTER" must be adjusted to maintain the min. edge distance to mortar joints, additional concrete anchors may be required to ensure the "MAX. ON CENTER" dimension are not exceeded.*
3. *Concrete anchor table:*

ANCHOR TYPE	ANCHOR SIZE	MIN. EMBEDMENT	MIN. CLEARANCE TO MASONRY EDGE	MIN. CLEARANCE TO ADJACENT ANCHOR
ITW TAPCON®	1/4"	1-3/4"	1-1/2"	4"
ELCO ULTRACON®	1/4"	1-3/4"	1"	4"

STATE OF TEXAS
LYNDON F. SCHMIDT
104123
LICENSED PROFESSIONAL ENGINEER

Documents Prepared By: Lyndon F. Schmidt, P.E. TEXAS P.E. #104123
RW BUILDING CONSULTANTS, INC.
P.O. Box 230 Valrico FL. 33595
Phone No.: 813.659.9197
TEXAS BOARD OF PROFESSIONAL ENGINEERS CERTIFICATE OF REGISTRATION # F-11852

PRODUCT: STEVES AND SONS STEEL DOOR

PART OR ASSEMBLY: COMPONENTS AND B.O.M.

REVISIONS

NO.	DATE		BY
1	7/16/15	Manuf./Product Name Change	JK

DATE: 5/24/10
SCALE: N.T.S.
DWG. BY: JK
CHK. BY: LFS
DRAWING NO.: TX-4096
SHEET 10 OF 10

© 2010 R.W. BUILDING CONSULTANTS INC.

R:\Clients\Steves and Sons - Permanent\Texas Dept of Ins\TX-4096-97.dwg, 3-10