CREST DOORS, INC.

157 HUMBLE AVE. ~ SAN ANTONIO, TEXAS 78225

OPAQUE FIBERGLASS DOUBLE DOOR
w/ or w/o SIDELITES
INSWING / OUTSWING
"IMPACT"

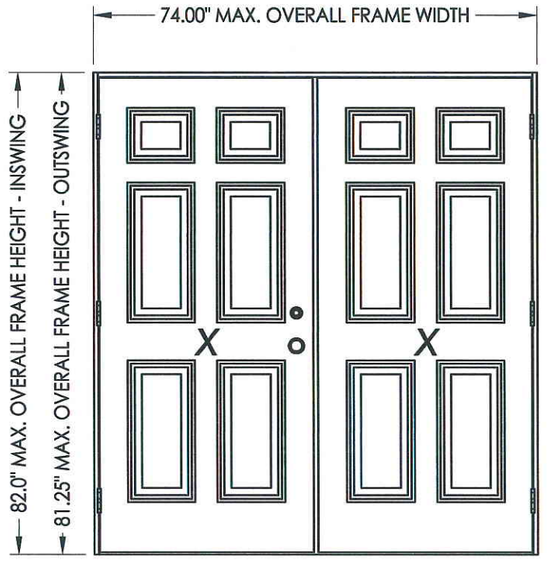

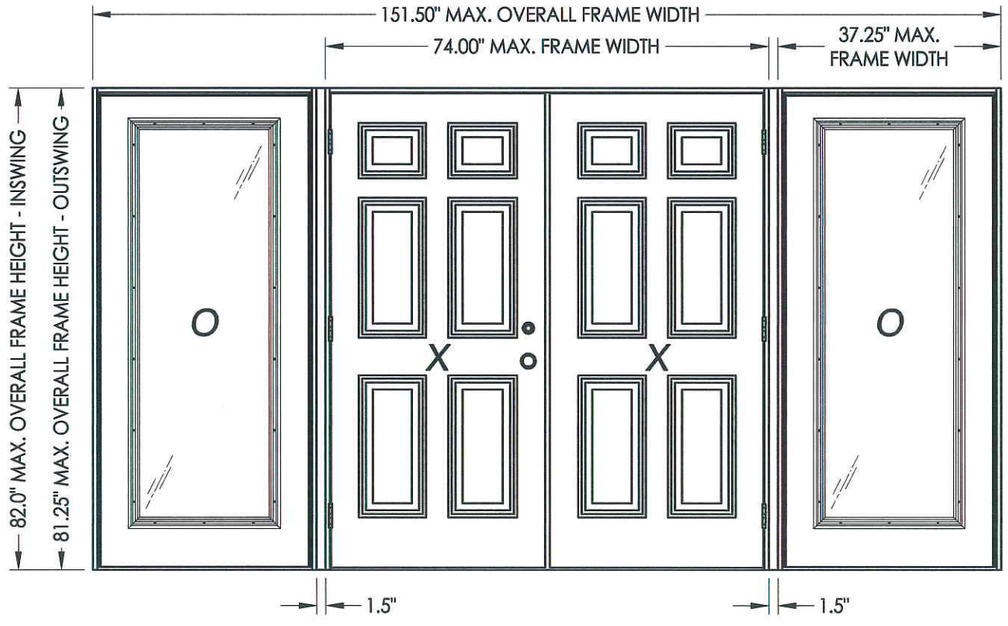

EVALUATED FOR USE IN THE STATE OF TEXAS

The Crest Fiberglass Door described herein complies with the 2006 International Residential Code (IRC), Sections R301 & R613 and the 2006 International Building Code (IBC), Sections 1405.12, 1609, 1714.5, 2403 and 2404 (including Texas revisions) subject to the following conditions:

1. Anchors shall be as listed and spaced as shown in the details. Anchor embedment to base material shall be beyond wall dressing or stucco.
2. This system has been tested and evaluated as a large missile impact protective system for installation in the Seaward, Inland I and Inland II areas. This product meets missile level "D" and includes Wind Zone 4 as defined in ASTM E1996.
3. Allowable design pressure requirements must be equal to or less than the design pressure rating shown in the design pressure chart, sheet 1 of this drawing.
4. Conditions not covered by this drawing are subject to further engineering analysis.

SUPPORTING DOCUMENTS & EVIDENCE

1. Testing per AAMA/WDMA/CSA 101/I.S.2/A440-05 & ASTM E 1886/1996-02:
   Testing Evaluation Laboratories, Inc. test report(s) #: TEL 01520034 & TEL 01520037.
2. Calculations (Anchoring and Glass load resistance report ASTM E1300-04) prepared by Lyndon F. Schmidt, P.E.
3. Certificate of Participation issued by the National Accreditation and Management Institute, Inc., certifying that Crest Doors, Inc. is manufacturing products within a Quality Assurance program.

TABLE OF CONTENTS

SHEET#	DESCRIPTION
1	Typical elevations, design pressures & general notes
2	Door panel details
3	Sidelite panel & glazing details
4	Elevations
5	Horizontal cross sections
6	Vertical cross sections
7	Vertical cross sections
8	Frame anchoring
9	Frame anchoring
10	Astragal details
11	Components and bill of materials

CONFIGURATION	MAX. FRAME DIMENSION	MAX. SIDELITE D.L.O. DIMENSION	GLASS TYPE	DESIGN PRESSURE (PSF) INSWING		DESIGN PRESSURE (PSF) OUTSWING	
				POSITIVE	NEGATIVE	POSITIVE	NEGATIVE
XX	74.00" x 82.00"	N/A	N/A	+50.0	-55.0	+50.0	-50.0
OXXO	151.50" x 82.00"	20.50" x 62.50"	G1	+50.0	-55.0	+50.0	-50.0

STATE OF TEXAS · LYNDON F. SCHMIDT · 104123 · LICENSED PROFESSIONAL ENGINEER · 5-17-10

Documents Prepared By: Lyndon F. Schmidt, P.E.
TEXAS P.E. #104123

RW BUILDING CONSULTANTS, INC.
P.O. Box 230 Valrico FL. 33595
Phone No.: 813.659.9197

TEXAS BOARD OF PROFESSIONAL ENGINEERS
CERTIFICATE OF REGISTRATION # F-11852

PRODUCT: CREST FIBERGLASS DOOR

PART OR ASSEMBLY: TYPICAL ELEVATION, DESIGN PRESSURES & GENERAL NOTES

NO.	DATE	BY	REVISIONS

DATE: 04/13/10
SCALE: N.T.S.
DWG. BY: JK
CHK. BY: LFS
DRAWING NO.: TX-4085
SHEET 1 OF 11

© 2010 R.W. BUILDING CONSULTANTS INC.

R:\A - Projects\Project Folders\Proj 1301-1400\PF 1384\D. RWBC Drawings\TX-2010\TX-6-8 FG IMP.dwg, TX-4085

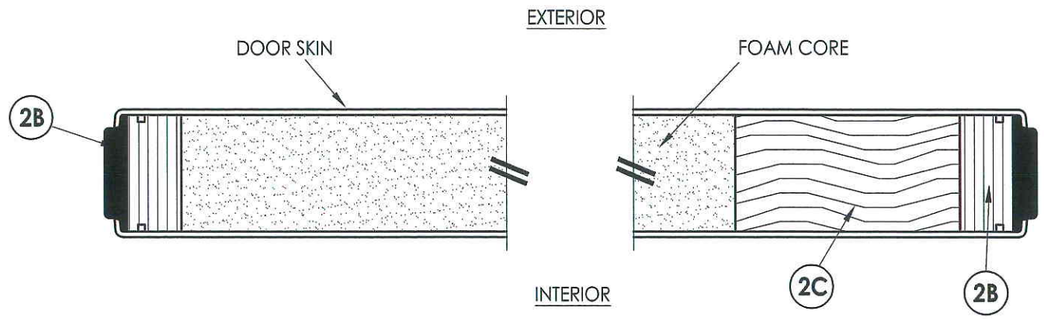

1/2 HORIZONTAL CROSS SECTION

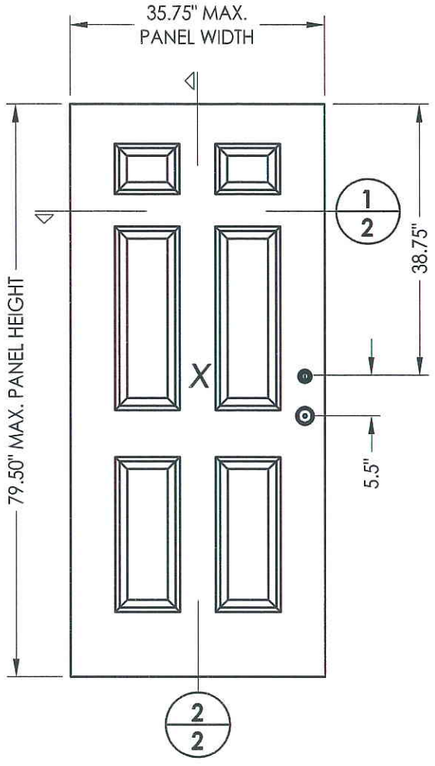

40 DOOR PANEL

FIBERGLASS DOOR SKIN: MIN. 0.079" THK.
CORE MATERIAL: EPS FOAM (POLYSTYRENE)

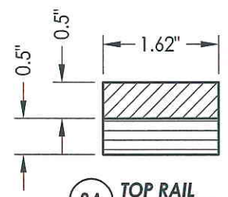

2A TOP RAIL
Poplar LVL/WPC

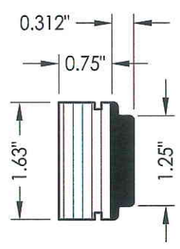

2B HINGE & LATCH STILE
LVL/PVC

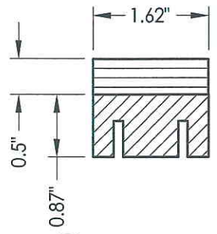

2D BOTTOM RAIL
Poplar LVL/WPC

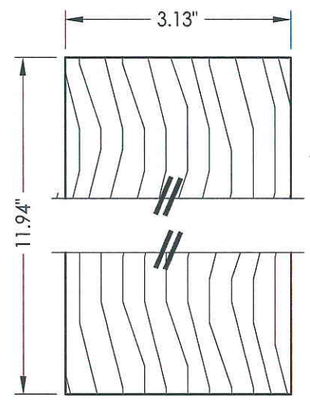

2C LOCK BLOCK
Wood (S.G.>= 0.42)

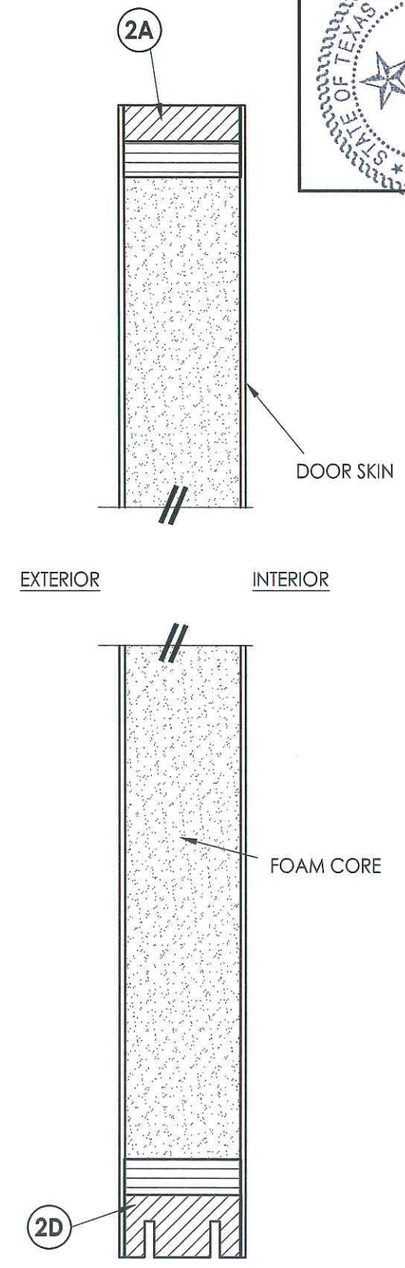

2/2 VERTICAL CROSS SECTION

STATE OF TEXAS
LYNDON F. SCHMIDT
104123
LICENSED
PROFESSIONAL ENGINEER
5.17.10

Documents Prepared By: Lyndon F. Schmidt, P.E.
TEXAS P.E. #104123

RW BUILDING CONSULTANTS, INC.
P.O. Box 230 Valrico FL. 33595
Phone No.: 813.659.9197

TEXAS BOARD OF PROFESSIONAL ENGINEERS
CERTIFICATE OF REGISTRATION # F-11852

PRODUCT: CREST FIBERGLASS DOOR

PART OR ASSEMBLY: DOOR PANEL DETAILS

NO.	DATE	REVISIONS	BY

DATE: 04/13/10
SCALE: N.T.S.
DWG. BY: JK
CHK. BY: LFS
DRAWING NO.: TX-4085
SHEET 2 OF 11

© 2010 R.W. BUILDING CONSULTANTS INC.

K:\A - Projects\Project Folders\Proj 1301-1400\PF 1384\D. RWBC Drawings\TX-2010\TX-6-8 FG IMP.dwg, 2-2

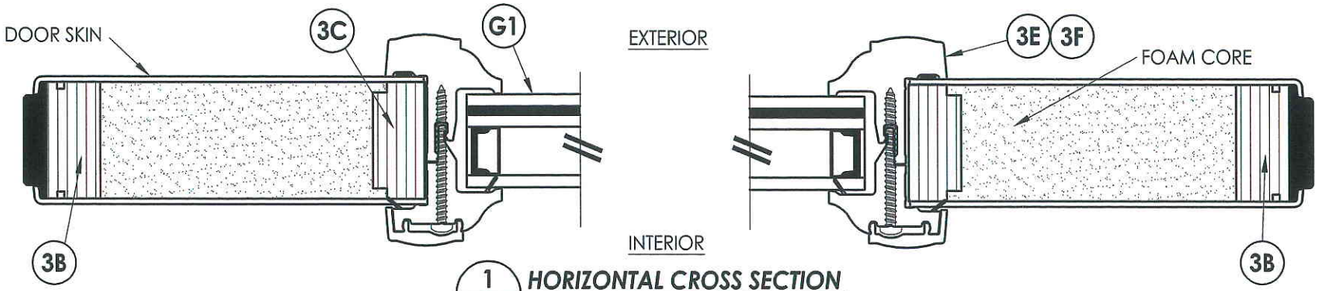

1/3 **HORIZONTAL CROSS SECTION**

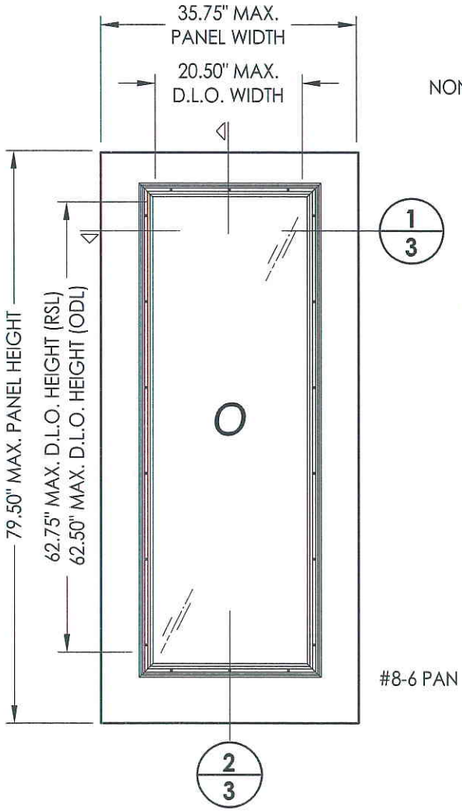

50 **SIDELITE PANEL**

FIBERGLASS DOOR SKIN: MIN. 0.079" THK.
CORE MATERIAL: EPS FOAM (POLYSTYRENE)

NOTE:
1. Spacing for lite frame screws is as follows:
   Sides: 4.5" from corners and 11.5" o.c. thereafter
   Top & Bottom: 4.5" from corners and @ centerline.

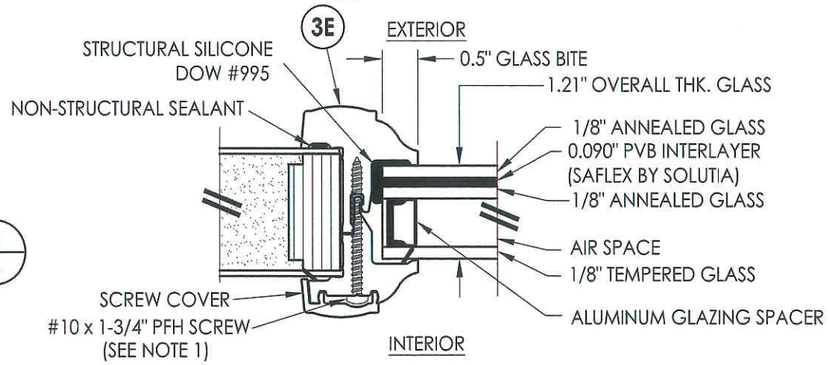

G1 **GLAZING DETAIL**
RSL Lite Frame

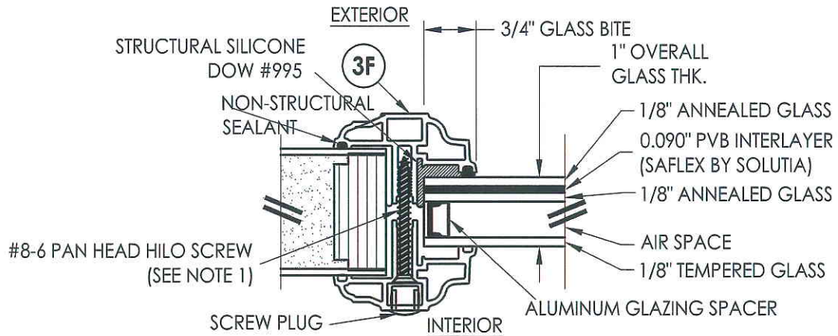

G2 **GLAZING DETAIL**
ODL Lite Frame

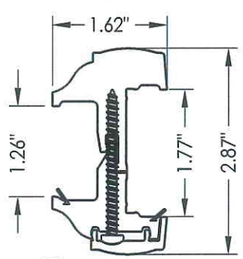

3E **RSL LITE FRAME**
PVC

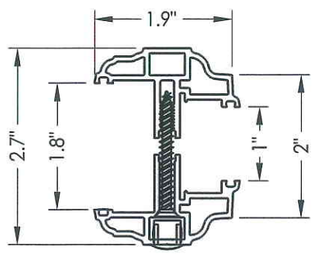

3F **ODL LITE FRAME**
Aluminum

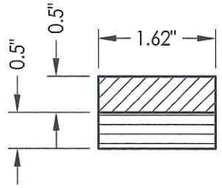

3A **TOP RAIL**
Poplar LVL/WPC

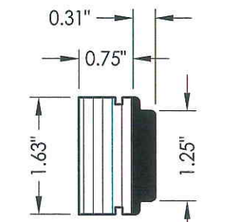

3B **HINGE & LATCH STILE**
LVL/PVC

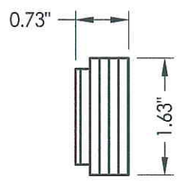

3C **LITE OPENING**
LVL Reinforcement

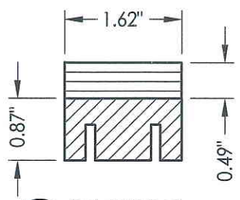

3D **BOTTOM RAIL**
Poplar LVL/WPC

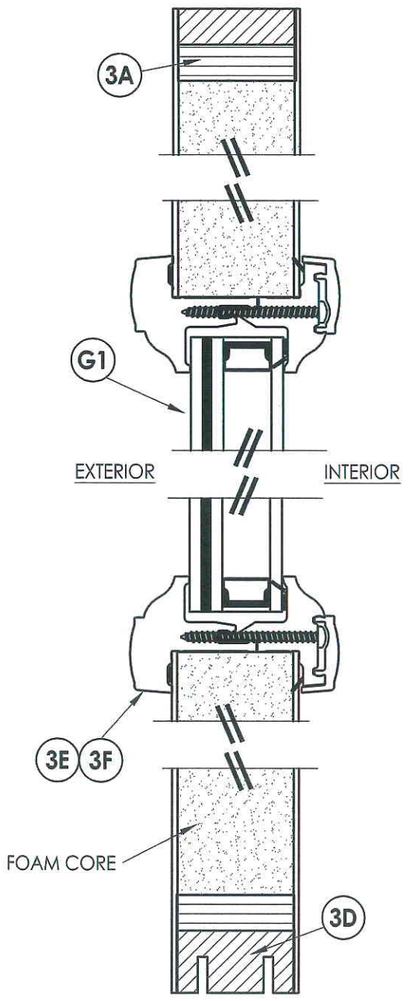

2/3 **VERTICAL CROSS SECTION**

Documents Prepared By: Lyndon F. Schmidt, P.E.
TEXAS P.E. #104123

RW BUILDING CONSULTANTS, INC.
P.O. Box 230 Valrico FL. 33595
Phone No.: 813.659.9197

TEXAS BOARD OF PROFESSIONAL ENGINEERS
CERTIFICATE OF REGISTRATION # F-11852

STATE OF TEXAS · LYNDON F. SCHMIDT · 104123 · LICENSED PROFESSIONAL ENGINEER
5.17.10

PRODUCT: CREST FIBERGLASS DOOR
PART OR ASSEMBLY: SIDELITE PANEL & GLAZING DETAILS

NO.	DATE	REVISIONS	BY

DATE: 04/13/10
SCALE: N.T.S.
DWG. BY: JK
CHK. BY: LFS
DRAWING NO.: TX-4085
SHEET 3 OF 11

© 2010 R.W. BUILDING CONSULTANTS INC.

R:\A - Projects\Project Folders\Proj 1301-1400\PF 1384\D. RWBC Drawings\TX-2010\TX-6-8 FG IMP.dwg, 2-3

HARDWARE CHART		
MANUFACTURER	MODEL	ITEM #
KWIKSET	LOCK: 200	17
	DEADBOLT: 600	18

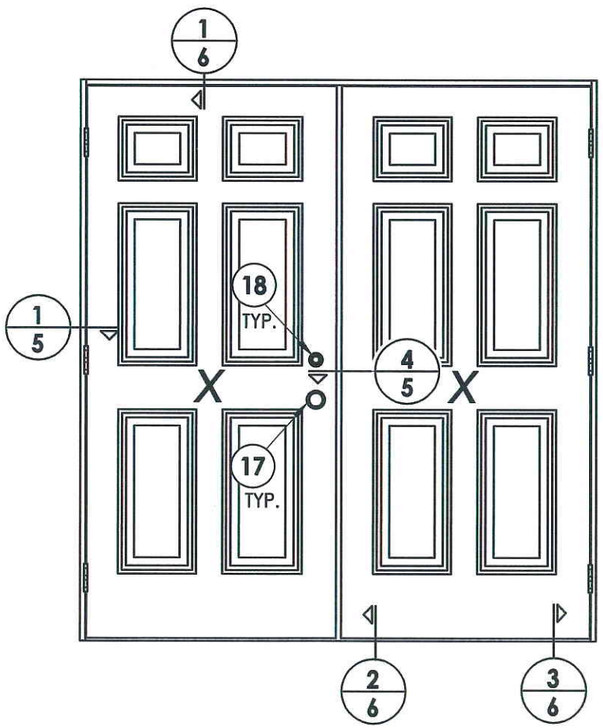

ELEVATION (XX)

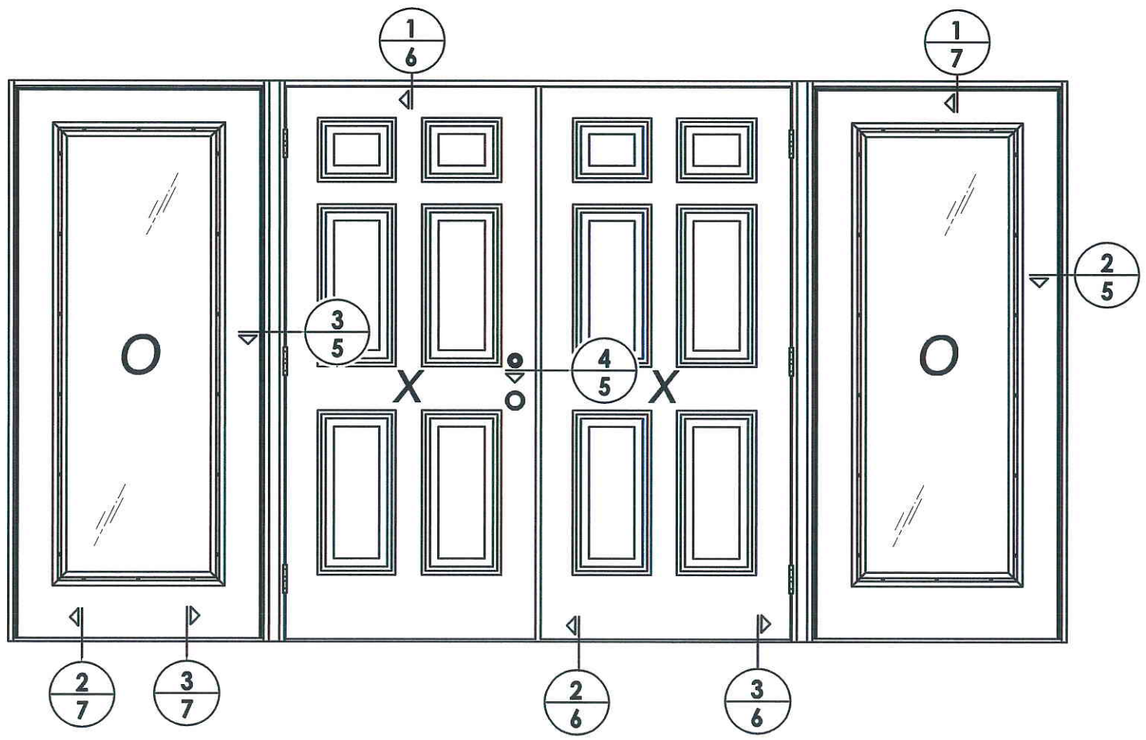

ELEVATION (OXXO)

STATE OF TEXAS
LYNDON F. SCHMIDT
104123
LICENSED PROFESSIONAL ENGINEER
5.17.10

Documents Prepared By: Lyndon F. Schmidt, P.E.
TEXAS P.E. #104123

RW BUILDING CONSULTANTS, INC.
P.O. Box 230 Valrico FL. 33595
Phone No.: 813.659.9197

TEXAS BOARD OF PROFESSIONAL ENGINEERS
CERTIFICATE OF REGISTRATION # F-11852

PRODUCT: CREST FIBERGLASS DOOR

PART OR ASSEMBLY: ELEVATIONS

NO.	DATE	REVISIONS	BY

DATE: 04/13/10
SCALE: N.T.S.
DWG. BY: JK
CHK. BY: LFS
DRAWING NO.: TX-4085
SHEET 4 OF 11

© 2010 R.W. BUILDING CONSULTANTS INC.

R:\A - Projects\Project Folders\Proj 1301-1400\PF 1384\D. RWBC Drawings\TX-2010\TX-6-8 FG IMP.dwg, 2-4

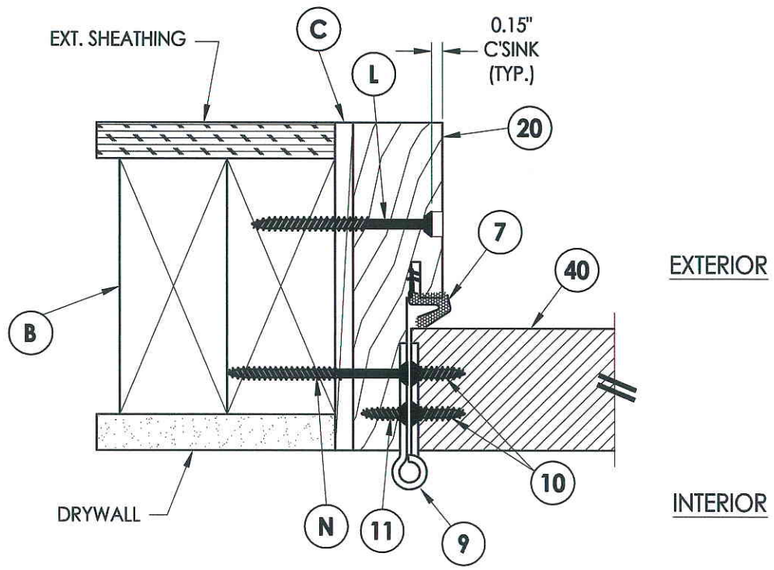

1/5 **HORIZONTAL CROSS SECTION**
Inswing shown - outswing also approved

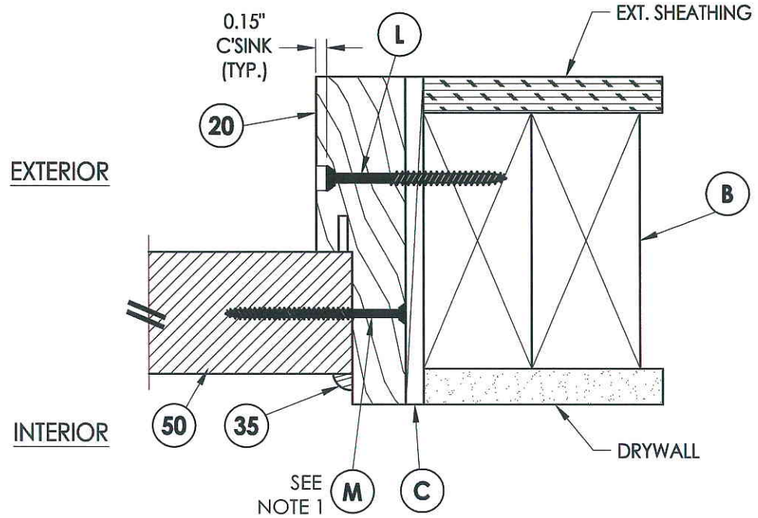

2/5 **HORIZONTAL CROSS SECTION**
Inswing shown - outswing also approved

NOTE:

1. Sidelite ass'y fasteners located 6" from each end and 6 more screws equally spaced between (8 screws total per jamb).

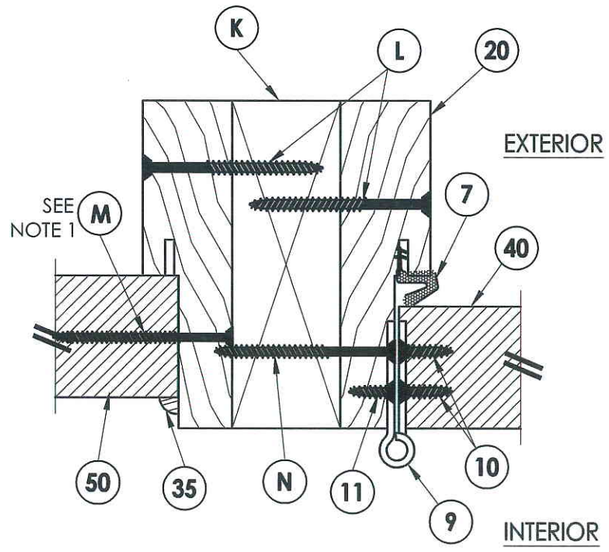

3/5 **HORIZONTAL CROSS SECTION**
Inswing shown - outswing also approved

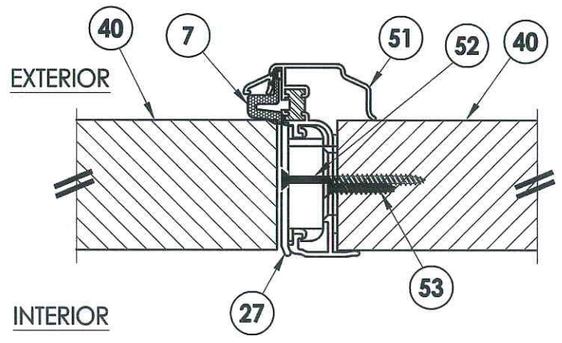

4/5 **HORIZONTAL CROSS SECTION**
Inswing shown - outswing also approved

STATE OF TEXAS
LYNDON F. SCHMIDT
104123
LICENSED
PROFESSIONAL ENGINEER
5-17-10

Documents Prepared By: Lyndon F. Schmidt, P.E.
TEXAS P.E. #104123

RW BUILDING CONSULTANTS, INC.
P.O. Box 230 Valrico FL. 33595
Phone No.: 813.659.9197

TEXAS BOARD OF PROFESSIONAL ENGINEERS
CERTIFICATE OF REGISTRATION # F-11852

PRODUCT: *CREST FIBERGLASS DOOR*

PART OR ASSEMBLY: *HORIZONTAL CROSS SECTIONS*

NO.	DATE	BY	REVISIONS

DATE: 04/13/10
SCALE: N.T.S.
DWG. BY: JK
CHK. BY: LFS
DRAWING NO.: TX-4085
SHEET 5 OF 11

© 2010 R.W. BUILDING CONSULTANTS INC.

R:\A - Projects\Project Folders\Proj 1301-1400\PF 1384\D. RWBC Drawings\TX-2010\TX-6-8 FG IMP.dwg, 2-5

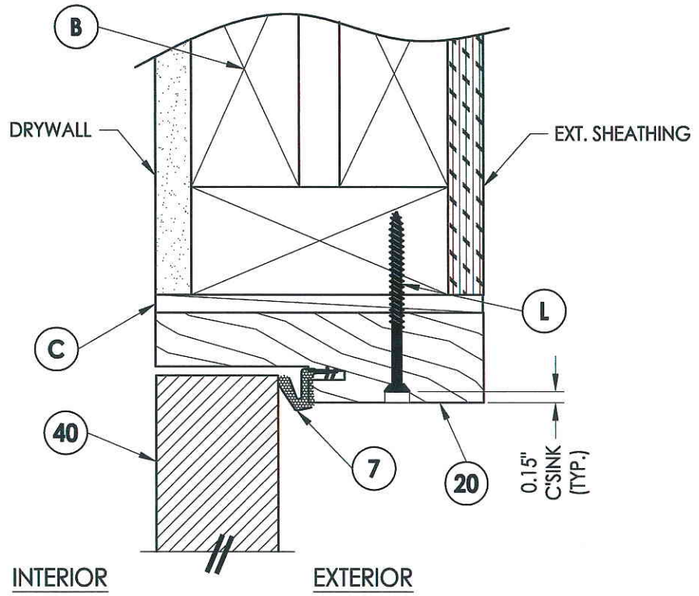

1/6 **VERTICAL CROSS SECTION**
Inswing shown - outswing also approved

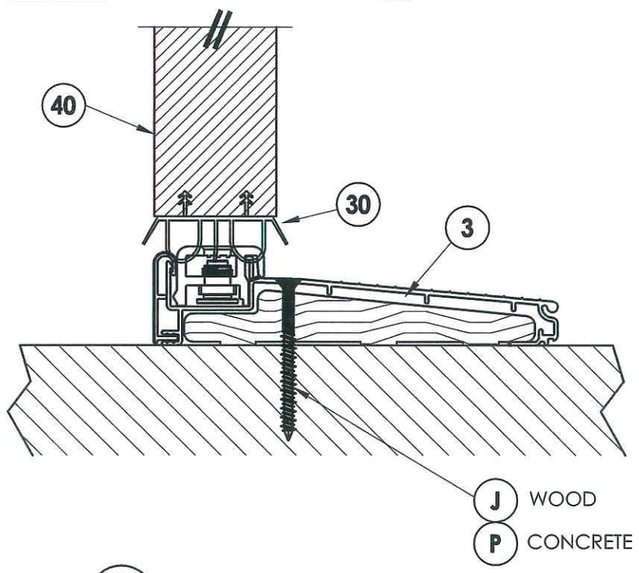

2/6 **VERTICAL CROSS SECTION**
Inswing configuration

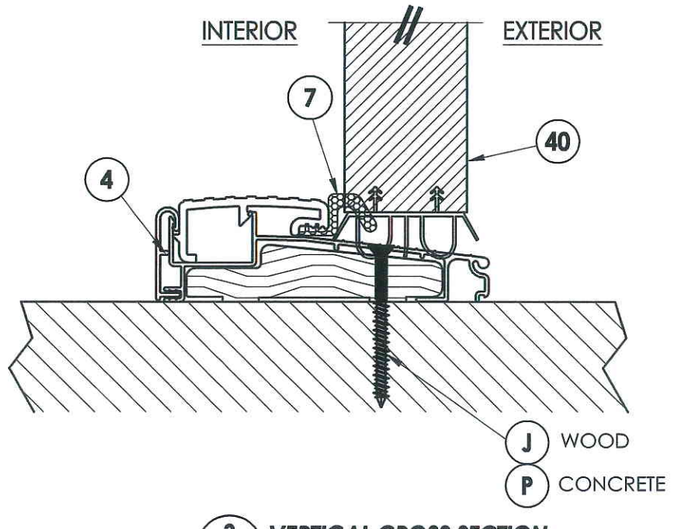

3/6 **VERTICAL CROSS SECTION**
Outswing configuration

Documents Prepared By: Lyndon F. Schmidt, P.E.
TEXAS P.E. #104123
RW BUILDING CONSULTANTS, INC.
P.O. Box 230 Valrico FL, 33595
Phone No.: 813.659.9197
TEXAS BOARD OF PROFESSIONAL ENGINEERS
CERTIFICATE OF REGISTRATION # F-11852

PRODUCT: CREST FIBERGLASS DOOR

PART OR ASSEMBLY: VERTICAL CROSS SECTIONS

NO.	DATE	REVISIONS	BY

DATE: 04/13/10
SCALE: N.T.S.
DWG. BY: JK
CHK. BY: LFS
DRAWING NO.: TX-4085
SHEET 6 OF 11

© 2010 R.W. BUILDING CONSULTANTS INC.

R:\A - Projects\Project Folders\Proj 1301-1400\PF 1384\D. RWBC Drawings\TX-2010\TX-6-8 FG IMP.dwg, 2-6

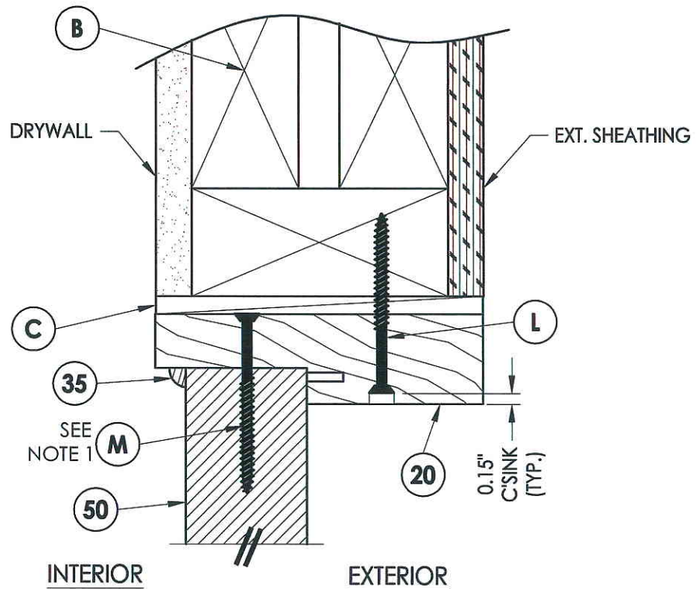

1/7 VERTICAL CROSS SECTION
Inswing shown - outswing also approved

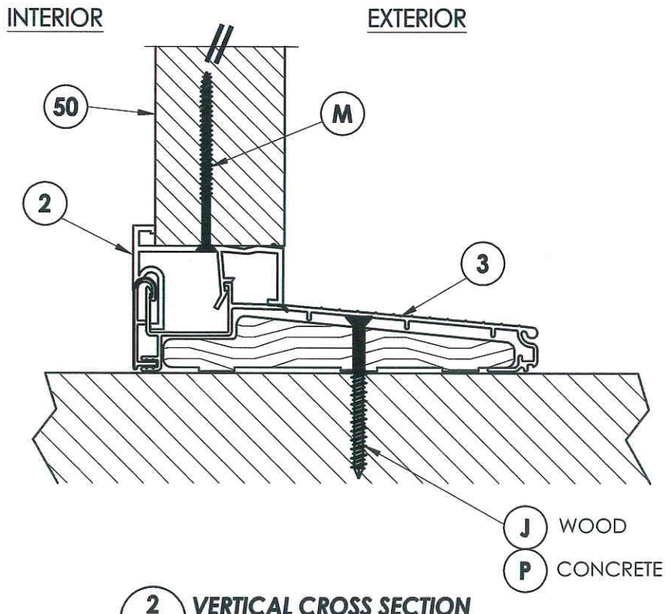

2/7 VERTICAL CROSS SECTION
Inswing configuration

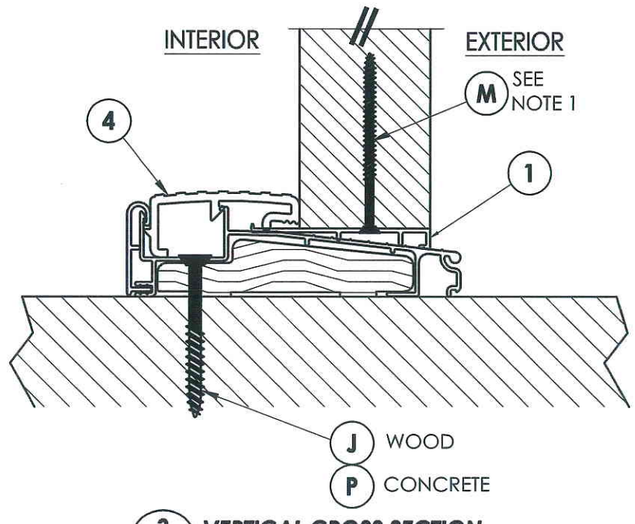

3/7 VERTICAL CROSS SECTION
Outswing configuration

NOTE:

1. Screws thru head and sill jamb located 3" from each end and on center line.

5-17-10

Documents Prepared By: Lyndon F. Schmidt, P.E.
TEXAS P.E. #104123

RW BUILDING CONSULTANTS, INC.
P.O. Box 230 Valrico FL. 33595
Phone No.: 813.659.9197

TEXAS BOARD OF PROFESSIONAL ENGINEERS
CERTIFICATE OF REGISTRATION # F-11852

PRODUCT: CREST FIBERGLASS DOOR

PART OR ASSEMBLY: VERTICAL CROSS SECTIONS

NO.	DATE	REVISIONS	BY

DATE: 04/13/10
SCALE: N.T.S.
DWG. BY: JK
CHK. BY: LFS
DRAWING NO.: TX-4085
SHEET 7 OF 11

© 2010 R.W. BUILDING CONSULTANTS INC.

R:\A - Projects\Project Folders\Proj 1301-1400\PF 1384\D. RWBC Drawings\TX-2010\TX-6-8 FG IMP.dwg, 2-7

2X FRAMING TO BE DESIGNED BY THE ENGINEER OR ARCHITECT OF RECORD BASED ON WIND LOADS AND THE CLADDING BEING USED.

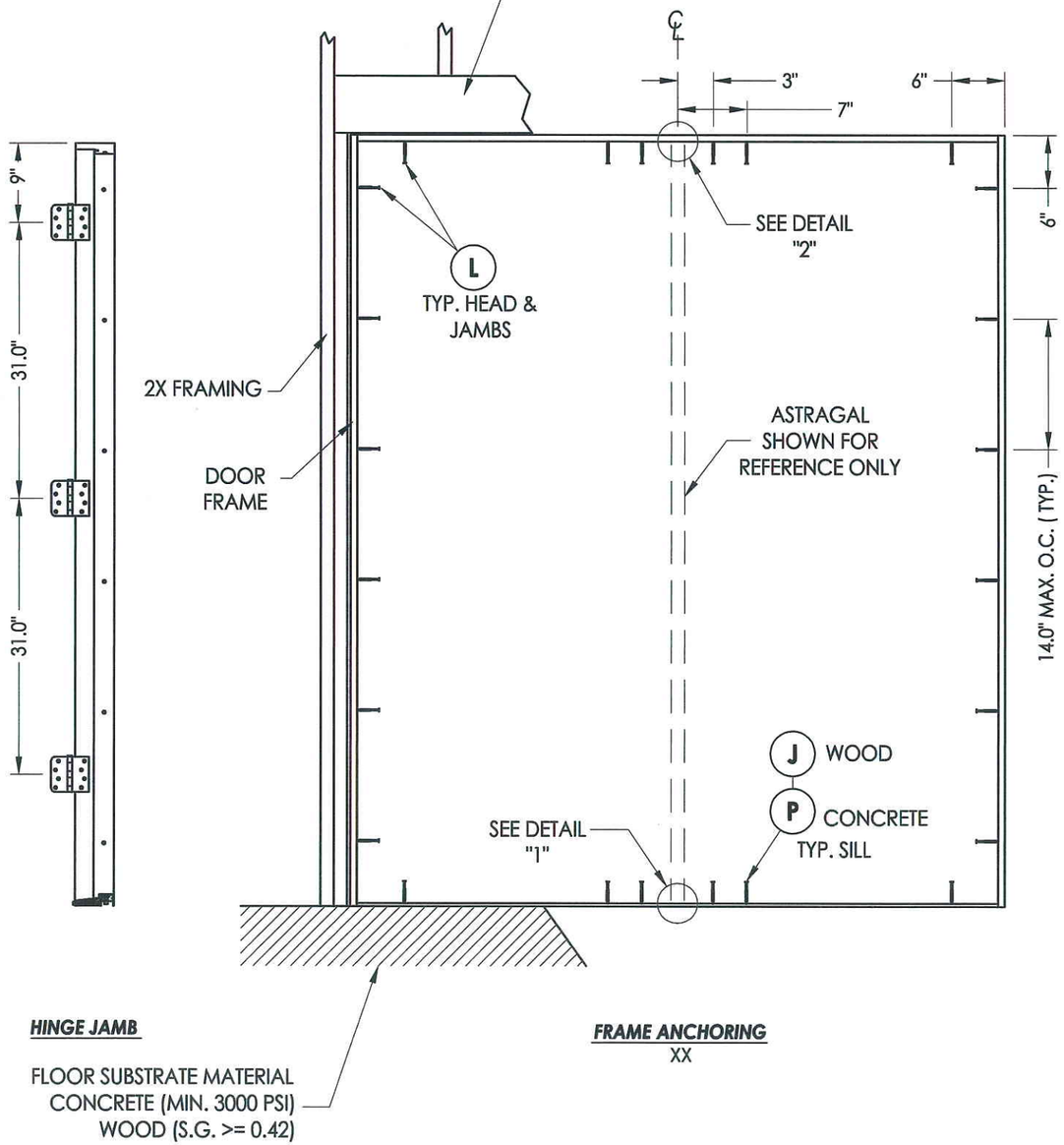

HINGE JAMB

FLOOR SUBSTRATE MATERIAL
CONCRETE (MIN. 3000 PSI)
WOOD (S.G. >= 0.42)

FRAME ANCHORING
XX

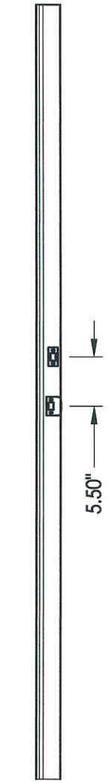

ASTRAGAL

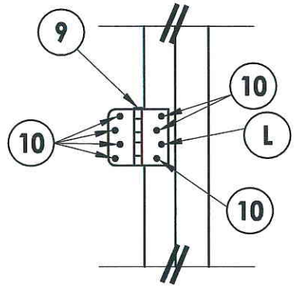

HINGE DETAIL

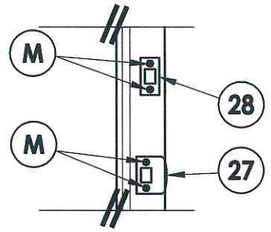

LATCH & DEADBOLT DETAIL

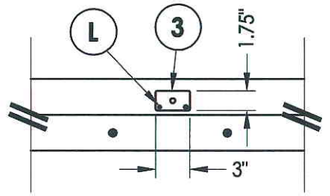

DETAIL 2
Inswing configuration

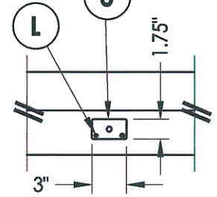

DETAIL 2
Outswing configuration

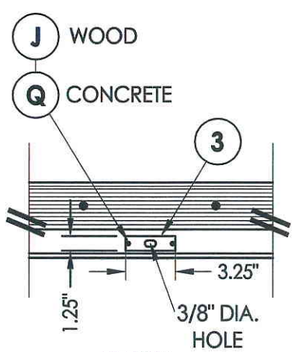

DETAIL 1
Inswing configuration

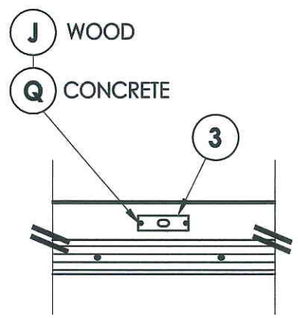

DETAIL 1
Outswing configuration

STATE OF TEXAS
LYNDON F. SCHMIDT
104123
LICENSED PROFESSIONAL ENGINEER
5.7.10

Documents Prepared By: Lyndon F. Schmidt, P.E.
TEXAS P.E. #104123

RW BUILDING CONSULTANTS, INC.
P.O. Box 230 Valrico FL. 33595
Phone No.: 813.659.9197

TEXAS BOARD OF PROFESSIONAL ENGINEERS
CERTIFICATE OF REGISTRATION # F-11852

PRODUCT: *CREST FIBERGLASS DOOR*

PART OR ASSEMBLY: *FRAME ANCHORING*

NO.	DATE	REVISIONS	BY

DATE: 04/13/10
SCALE: N.T.S.
DWG. BY: JK
CHK. BY: LFS
DRAWING NO.: TX-4085
SHEET 8 OF 11

© 2010 R.W. BUILDING CONSULTANTS INC.

R:\A - Projects\Project Folders\Proj 1301-1400\PF 1384\D. RWBC Drawings\TX-2010\TX-6-8 FG IMP.dwg, 2-8

2X FRAMING TO BE DESIGNED BY THE ENGINEER OR ARCHITECT OF RECORD BASED ON WIND LOADS AND THE CLADDING BEING USED.

2X FRAMING

4"
8"
3"
7"
6"

SEE DETAIL "2"

TYP. HEAD & JAMBS

TYP. MULLIONS

DOOR FRAME

ASTRAGAL SHOWN FOR REFERENCE ONLY

6"

14.0" MAX. O.C. (TYP.)

SEE DETAIL "1"

J WOOD
P CONCRETE
TYP. SILL

4"

4"

9"
31.0"
11.0"

HINGE JAMB

FRAME ANCHORING
OXXO

5.50"

ASTRAGAL

M
28
M
27

LATCH & DEADBOLT DETAIL

FLOOR SUBSTRATE MATERIAL
CONCRETE (MIN. 3000 PSI)
WOOD (S.G. >= 0.42)

J WOOD
Q CONCRETE
3
3.25"
1.25"
3/8" DIA. HOLE

DETAIL 1
Inswing configuration

L
3
1.75"
3"

DETAIL 2
Inswing configuration

J WOOD
Q CONCRETE
L
3
1.75"
3"

DETAIL 2
Outswing configuration

J WOOD
Q CONCRETE
3

DETAIL 1
Outswing configuration

9
10
10
L
10

HINGE DETAIL

STATE OF TEXAS
LYNDON F. SCHMIDT
104123
LICENSED PROFESSIONAL ENGINEER

5-17-10

Documents Prepared By: Lyndon F. Schmidt, P.E.
TEXAS P.E. #104123

RW BUILDING CONSULTANTS, INC.
P.O. Box 230 Valrico FL. 33595
Phone No.: 813.659.9197

TEXAS BOARD OF PROFESSIONAL ENGINEERS
CERTIFICATE OF REGISTRATION # F-11852

PRODUCT: *CREST FIBERGLASS DOOR*

PART OR ASSEMBLY: *FRAME ANCHORING*

NO.	DATE	REVISIONS	BY

DATE: 04/13/10
SCALE: N.T.S.
DWG. BY: JK
CHK. BY: LFS
DRAWING NO.: TX-4085
SHEET 9 OF 11

© 2010 R.W. BUILDING CONSULTANTS INC.

R:\A - Projects\Project Folders\Proj 1301-1400\PF 1384\D. RWBC Drawings\TX-2010\TX-6-8 FG IMP.dwg, 2-9

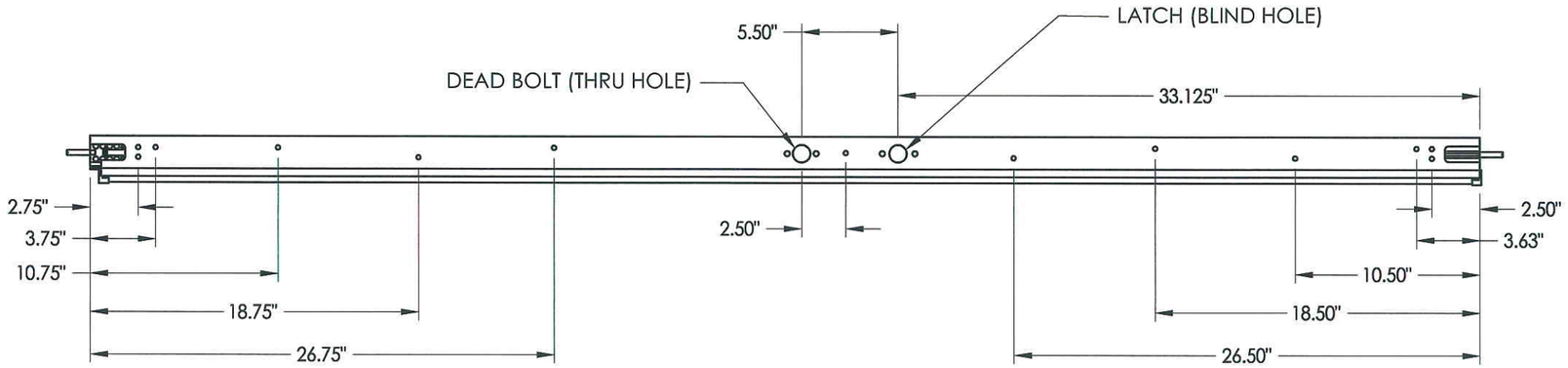

6'8 ALUMINUM ASTRAGAL ASSEMBLY
By Endura Products

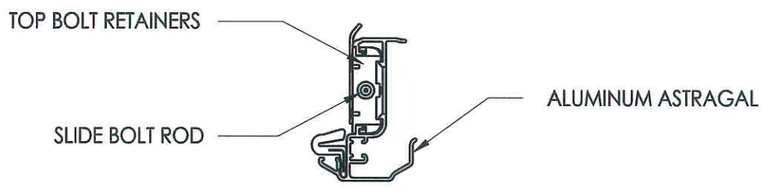

VIEW A-A
Aluminum Astragal Assembly

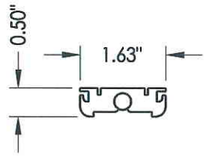

TOP BOLT RETAINER
MATL: 9-3/4" Aluminum

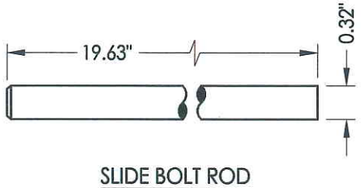

SLIDE BOLT ROD
MATL: Steel

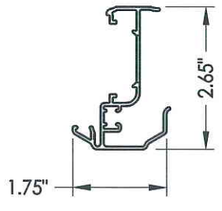

51 ***ALUMINUM ASTRAGAL***
By Endura Products

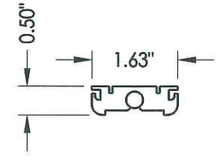

TOP BOLT RETAINER
MATL: 4-3/4" Aluminum

Documents Prepared By: Lyndon F. Schmidt, P.E.
TEXAS P.E. #104123
RW BUILDING CONSULTANTS, INC.
P.O. Box 230 Valrico FL. 33595
Phone No.: 813.659.9197
TEXAS BOARD OF PROFESSIONAL ENGINEERS
CERTIFICATE OF REGISTRATION # F-11852

PRODUCT: CREST FIBERGLASS DOOR
PART OR ASSEMBLY: ENDURA ASTRAGAL DETAILS

NO.	DATE	BY
	REVISIONS	

DATE: 06/27/08
SCALE: N.T.S.
DWG. BY: JK
CHK. BY: LFS
DRAWING NO.: TX-4085
SHEET 10 OF 11

© 2010 R.W. BUILDING CONSULTANTS INC.

R:\A - Projects\Project Folders\Proj 1301-1400\PF 1384\D. RWBC Drawings\TX-2010\TX-6-8 FG IMP.dwg, 2-10

BILL OF MATERIALS

ITEM #	DESCRIPTION	MATERIAL
A	1X BUCK SG >= 0.55	WOOD
B	2X BUCK SG >= 0.55	WOOD
C	1/4" MAX. SHIM SPACE	-
J	#10 X 3" PFH WOOD SCREW	STEEL
K	2X REINFORCEMENT (CLEAR PINE SG >= 0.42)	WOOD
L	#10 X 2-1/2" PFH WOOD SCREW	STEEL
M	#8 X 2-1/2" PFH WOOD SCREW	STEEL
N	#9 X 2-1/2" PFH WOOD SCREW	STEEL
P	1/4" PFH ELCO OR ITW CONCRETE SCREW (1-3/4" MIN. EMB.)	STEEL
Q	3/16" PFH ITW CONCRETE SCREW (1-3/4" MIN. EMB.)	STEEL
1	SIDELITE SPACER -OUTSWING	-
2	SIDELITE SPACER -INSWING	-
3	INSWING THRESHOLD ALUMINUM W/ COMPOSITE SUBSTRATE	ALUM/COMP.
4	OUTSWING THRESHOLD ALUMINUM W/ COMPOSITE SUBSTRATE	ALUM/COMP.
5	#10 X 2-1/2" PFH SCREW	STEEL
7	WEATHERSTRIP BY Q-LON	FOAM
9	4" HINGE	STEEL
10	#9 X 1" PFH WOOD SCREW	STEEL
11	#9 X 5/8" PFH WOOD SCREW	STEEL
20	JAMB FINGER - JOINT - PINE (SG >= 0.42)	WOOD
27	LATCH STRIKE PLATE	STEEL
28	DEADBOLT PLATE	STEEL
30	DOOR SWEEP	PVC
35	QUARTER ROUND	WOOD
40	DOOR PANEL - SEE DOOR PANEL DETAIL SHEET FOR CONSTRUCTION DETAILS	-
50	SIDELITE PANEL - SEE SIDELITE PANEL DETAIL SHEET FOR CONSTRUCTION DETAILS	-
51	ASTRAGAL BY ENDURA	ALUM
52	#8 x 2-1/4" PFH WOOD SCREW	STEEL
53	#8 x 1" PFH WOOD SCREW	STEEL
56	ASTRAGAL STRIKE PLATE	STEEL

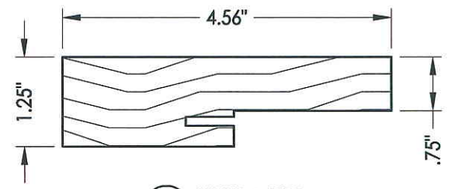

20 **HEAD & SIDE** Jamb

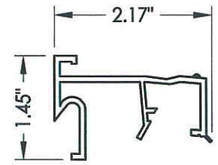

2 **SIDELITE SPACER** Inswing

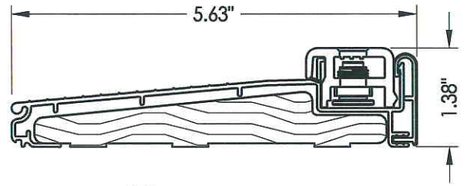

3 **INSWING THRESHOLD**

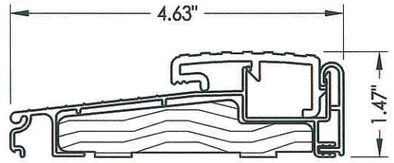

4 **OUTSWING THRESHOLD**

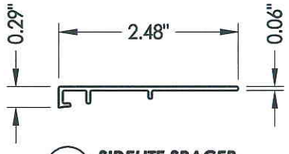

1 **SIDELITE SPACER** Outswing

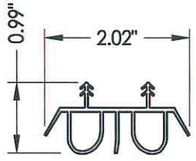

30 **SWEEP**

CONCRETE ANCHOR NOTES:

1. *Substitution of equal concrete anchors from a different supplier may have different edge distance and center distance requirements.*
2. *Concrete anchor locations at the corners may be adjusted to maintain the min. edge distance to mortar joints. If concrete anchor locations noted as "MAX. ON CENTER" must be adjusted to maintain the min. edge distance to mortar joints, additional concrete anchors may be required to ensure the "MAX. ON CENTER" dimensions are not exceeded.*
3. *Concrete anchor table:*

ANCHOR TYPE	ANCHOR SIZE	MIN. EMBEDMENT	MIN. CLEARANCE TO MASONRY EDGE	MIN. CLEARANCE TO ADJACENT ANCHOR
ITW	3/16"	1-3/4"	2-5/8"	2-1/4"
	1/4"	1-3/4"	2-1/2"	3"
ELCO	1/4"	1-3/4"	1"	4"

STATE OF TEXAS ★★★ LYNDON F. SCHMIDT 104123 LICENSED PROFESSIONAL ENGINEER 5.17.10

Documents Prepared By: Lyndon F. Schmidt, P.E.
TEXAS P.E. #104123

RW BUILDING CONSULTANTS, INC.
P.O. Box 230 Valrico FL. 33595
Phone No.: 813.659.9197

TEXAS BOARD OF PROFESSIONAL ENGINEERS
CERTIFICATE OF REGISTRATION # F-11852

PRODUCT: *CREST FIBERGLASS DOOR*

PART OR ASSEMBLY: *COMPONENTS AND B.O.M.*

NO.	DATE	BY	REVISIONS

DATE: 04/13/10
SCALE: N.T.S.
DWG. BY: JK
CHK. BY: LFS
DRAWING NO.: TX-4085
SHEET 11 OF 11

© 2010 R.W. BUILDING CONSULTANTS INC.

R:\A - Projects\Project Folders\Proj 1301-1400\PF 1384\D. RWBC Drawings\TX-2010\TX-6-8 FG IMP.dwg, 2-11