Trinity Glass INTERNATIONAL

4621 192nd STREET EAST TACOMA, WA 98446

3'0 X 6'8 GLAZED PREMIUM FIBERGLASS SINGLE DOOR WITH SIDELITE (BOXED) INSWING / OUTSWING

"NON-IMPACT"

EVALUATED FOR USE IN THE STATE OF TEXAS

The Trinity Glazed Premium Fiberglass Door with boxed sidelite described herein complies with the 2006 International Residential Code (IRC), Sections R301 & R613 and the 2006 International Building Code (IBC), Sections 1405.12, 1609, 1714.5, 2403 and 2404 (including Texas revisions) subject to the following conditions:

1. Anchors shall be as listed and spaced as shown in the details. Anchor embedment to base material shall be beyond wall dressing or stucco.
2. When used in areas requiring wind-borne debris protection this product is required to be protected with an impact resistant covering that complies with Section R301.2.1.2 of the IRC and Section 1609.1.2 of the IBC.
3. Allowable design pressure requirements must be equal to or less than the design pressure rating shown in the design pressure chart, sheet 1 of this drawing.
4. Conditions not covered by this drawing are subject to further engineering analysis.

SUPPORTING DOCUMENTS & EVIDENCE

1. Testing per ASTM E330-02 as performed by Testing Evaluation Laboratories Inc. and reported in test report numbers TEL 08-01370020, TEL 05-0411-6 and TEL 06-0223-3, signed by Wendell W. Haney, P.E.
2. Calculations (Anchoring and Glass load resistance report ASTM E1300-04) prepared by Lyndon F. Schmidt, P.E.
3. Certificate of Participation issued by the National Accreditation and Management Institute, Inc., certifying that Trinity Glass Int'l is manufacturing products within a Quality Assurance program.

TABLE OF CONTENTS

SHEET #	DESCRIPTION
1	Typical elevations, design pressures & general notes
2	Door panel construction details & glazing details
3	Sidelite panel construction details & glazing details
4	Horizontal cross sections
5	Vertical cross sections
6	Vertical cross sections
7	Frame anchoring
8	Components
9	Bill of materials

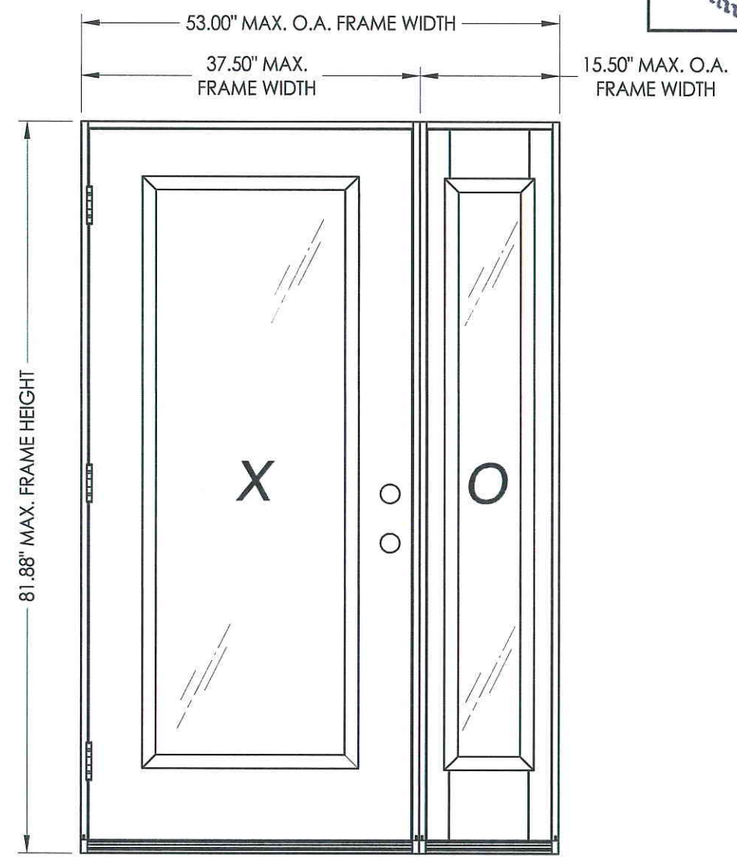

SINGLE with BOXED SIDELITE

SWING	MAX. FRAME DIMENSION	GLASS TYPE	DESIGN PRESSURE (PSF)	
			POSITIVE	NEGATIVE
INSWING	53.00" x 81.88"	G1	+55.0	-55.0
OUTSWING	53.00" x 80.75"		+55.0	-55.0

STATE OF TEXAS — LYNDON F. SCHMIDT — 104123 — LICENSED PROFESSIONAL ENGINEER

1-6-10

Documents Prepared By: Lyndon F. Schmidt, P.E. TEXAS P.E. #104123

RW BUILDING CONSULTANTS, INC. P.O. Box 230 Valrico FL. 33595 Phone No.: 813.659.9197

TEXAS BOARD OF PROFESSIONAL ENGINEERS CERTIFICATE OF REGISTRATION # F-11852

PRODUCT: TRINITY GLASS INT'L PREMIUM LIPLITE FIBERGLASS

PART OR ASSEMBLY: TYPICAL ELEVATION, DESIGN PRESSURES & GENERAL NOTES

REVISIONS

NO.	DATE	BY
2	7/23/09	AL
1	6/28/06	EW

TDI PRODUCT EVALUATION UPDATE
REVISED LOCKSET NOMENCLATURE

DATE: 8/26/05
SCALE: N.T.S.
DWG. BY: EW
CHK. BY: LFS
DRAWING NO.: TX-593
SHEET 1 OF 9

© 2009 R.W. BUILDING CONSULTANTS INC.

R:\A - Projects\Project Folders\Proj 1101 - 1200\pf1122\D. RWBC Drawings\TX-593\TX-593.dwg, TX-593

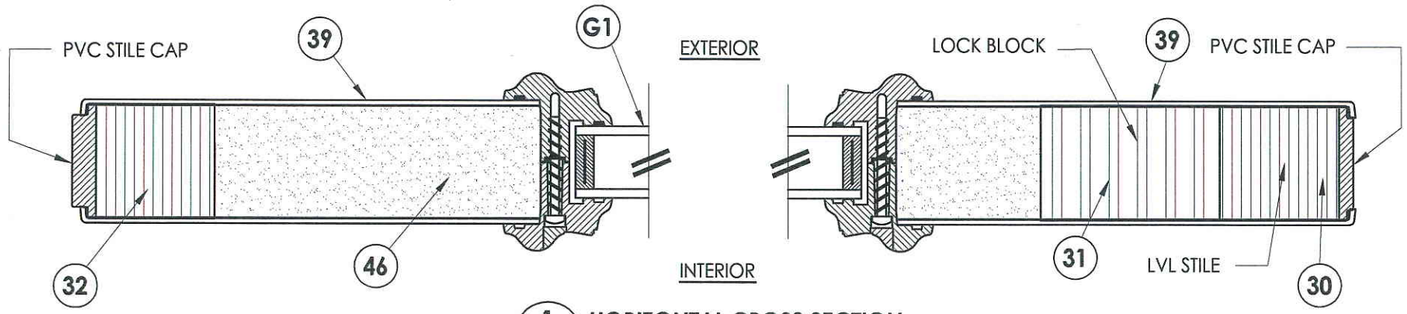

1/2 HORIZONTAL CROSS SECTION

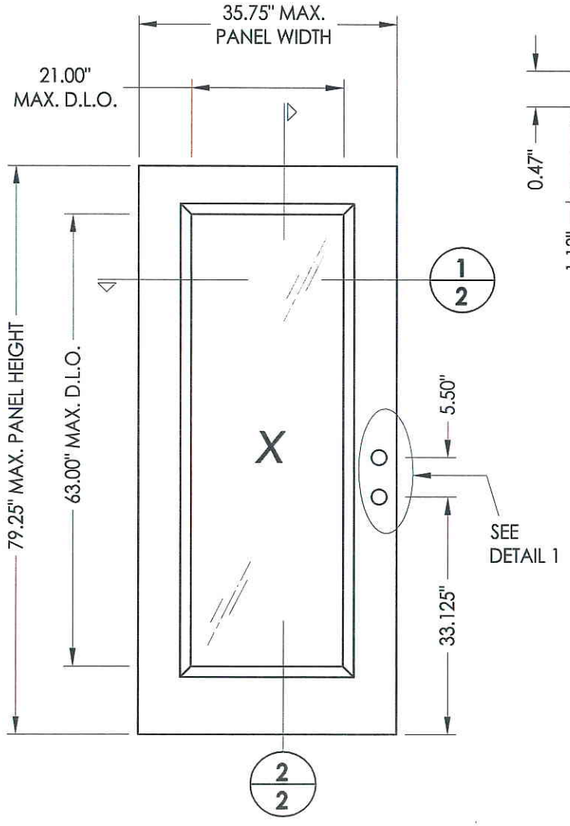

7 PREMIUM LIPLITE FIBERGLASS DOOR

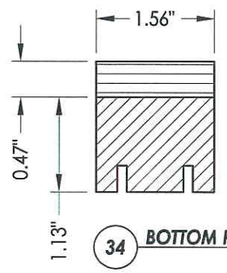

34 BOTTOM RAIL

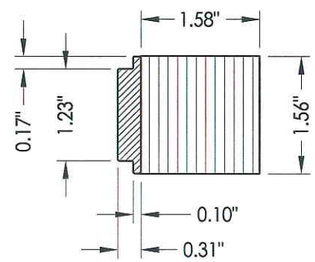

32 HINGE STILE

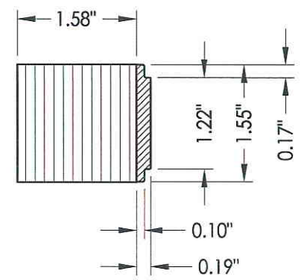

30 LATCH STILE

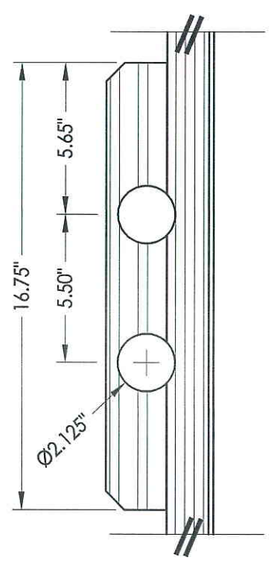

DETAIL 1

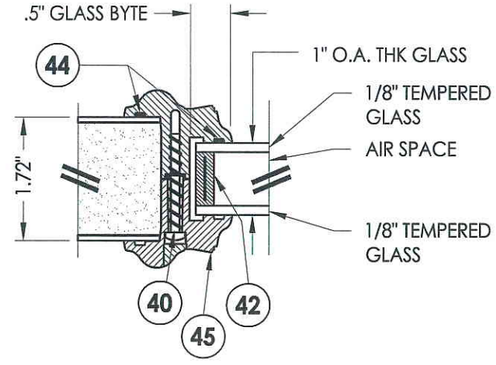

G1 GLAZING DETAIL

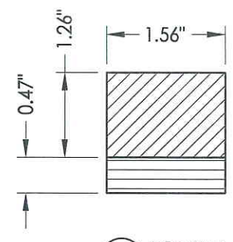

33 TOP RAIL

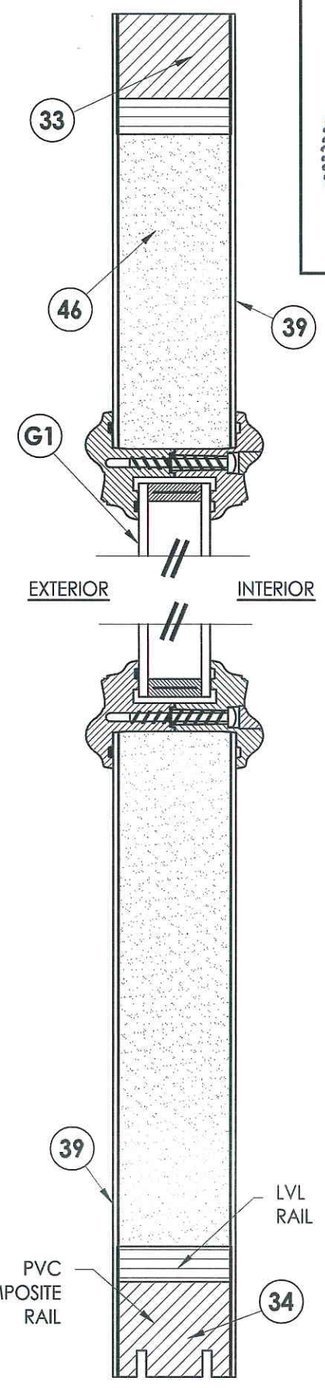

2/2 VERTICAL CROSS SECTION

STATE OF TEXAS
LYNDON F. SCHMIDT
104123
LICENSED
PROFESSIONAL ENGINEER
1-6-10

Documents Prepared By: Lyndon F. Schmidt, P.E.
TEXAS P.E. #104123

RW BUILDING CONSULTANTS, INC.
P.O. Box 230 Valrico FL. 33595
Phone No.: 813.659.9197

TEXAS BOARD OF PROFESSIONAL ENGINEERS
CERTIFICATE OF REGISTRATION # F-11852

PRODUCT: TRINITY GLASS INT'L PREMIUM LIPLITE FIBERGLASS

PART OR ASSEMBLY: DOOR PANEL CONSTRUCTION DETAILS AND GLAZING DETAILS

REVISIONS

NO.	DATE		BY
2	7/23/09	TDI PRODUCT EVALUATION UPDATE	AL
1	6/28/06	REVISED LOCKSET NOMENCLATURE	EW

DATE: 8/26/05
SCALE: N.T.S.
DWG. BY: EW
CHK. BY: LFS
DRAWING NO.: TX-593
SHEET 2 OF 9

© 2009 R.W. BUILDING CONSULTANTS INC.

R:\A - Projects\Project Folders\Proj 1101 - 1200\pf1122\D. RWBC Drawings\TX-593\TX-593.dwg, 2

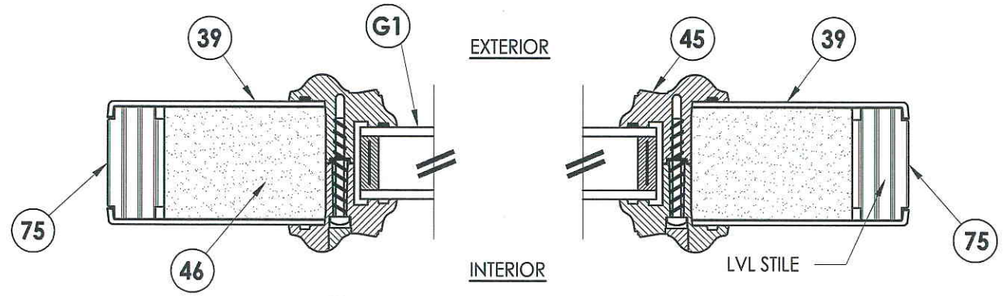

1/3 HORIZONTAL CROSS SECTION

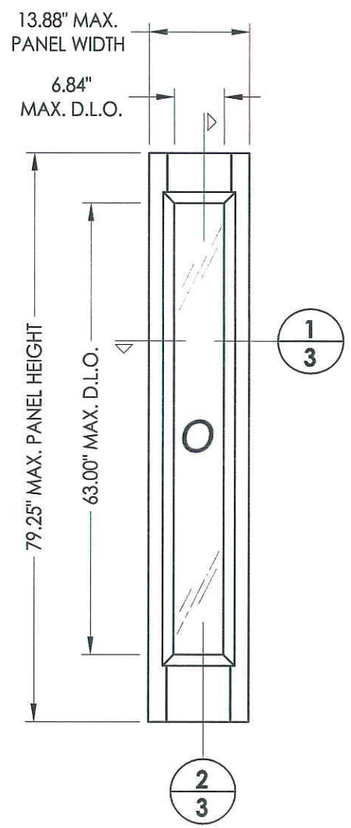

66 PREMIUM LIPLITE FIBERGLASS SIDELITE

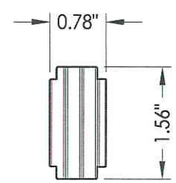

75 SIDELITE STILE

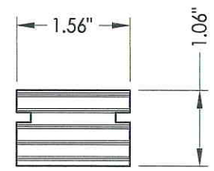

74 73 TOP & BOTTOM RAIL
SIDELITE

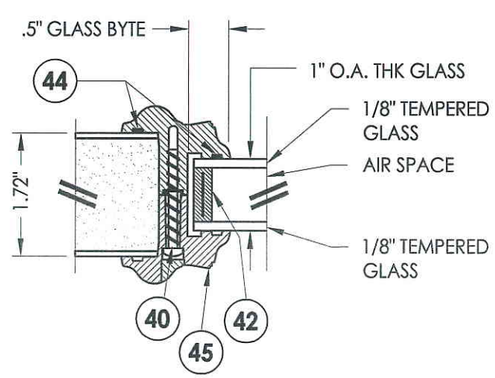

G1 GLAZING DETAIL

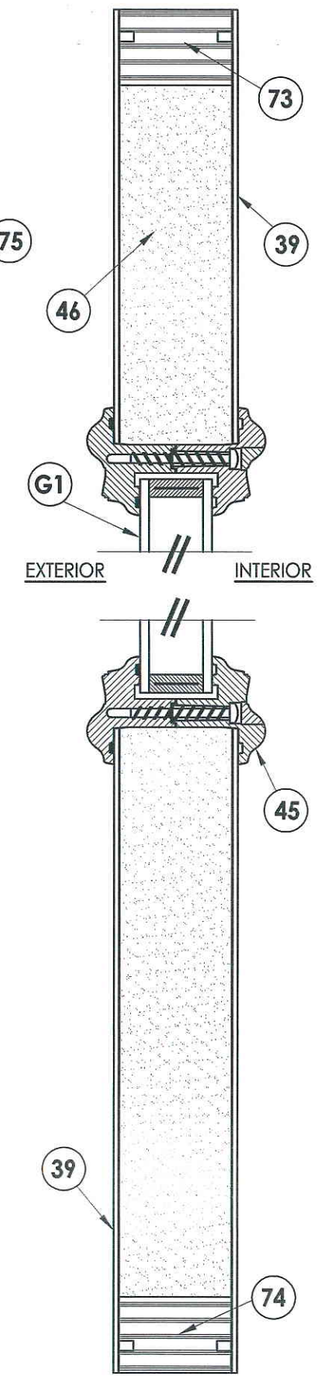

2/3 VERTICAL CROSS SECTION

STATE OF TEXAS
LYNDON F. SCHMIDT
104123
LICENSED
PROFESSIONAL ENGINEER
7-6-10

Documents Prepared By: Lyndon F. Schmidt, P.E.
TEXAS P.E. #104123

RW BUILDING CONSULTANTS, INC.
P.O. Box 230 Valrico FL. 33595
Phone No.: 813.659.9197

TEXAS BOARD OF PROFESSIONAL ENGINEERS
CERTIFICATE OF REGISTRATION # F-11852

PRODUCT: TRINITY GLASS INT'L
PREMIUM LIPLITE FIBERGLASS

PART OR ASSEMBLY: SIDELITE PANEL CONSTRUCTION DETAILS AND GLAZING DETAILS

REVISIONS

NO.	DATE		BY
2	7/23/09	TDI PRODUCT EVALUATION UPDATE	AL
1	6/28/06	REVISED LOCKSET NOMENCLATURE	EW

DATE: 8/26/05
SCALE: N.T.S.
DWG. BY: EW
CHK. BY: LFS
DRAWING NO.: TX-593
SHEET 3 OF 9

© 2009 R.W. BUILDING CONSULTANTS INC.

R:\A - Projects\Project Folders\Proj 1101 - 1200\pf1122\D. RWBC Drawings\TX-593\TX-593.dwg, 3

NOTE:

1. Sidelite ass'y fastener: 6" from each end and 4 more screws equally spaced between (6 screws total per jamb).

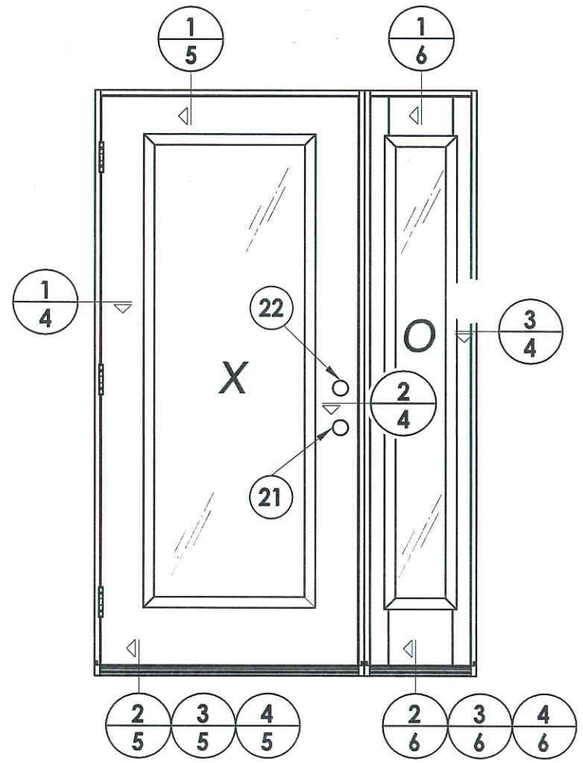

LOCK & DEADBOLT RATINGS CHART				
MANUFACTURER	MODEL	ITEM #	MAX. DESIGN PRESSURE (PSF) POSITIVE	MAX. DESIGN PRESSURE (PSF) NEGATIVE
KWIKSET	LOCK: 740	21	+55.0	-55.0
	DEADBOLT: 780	22		
KWIKSET	LOCK: COMBO 660	21	+55.0	-55.0
	DEADBOLT: COMBO 660	22		
SCHLAGE	LOCK: MAX. SECURITY	21	+55.0	-55.0
	DEADBOLT: MAX. SECURITY	22		

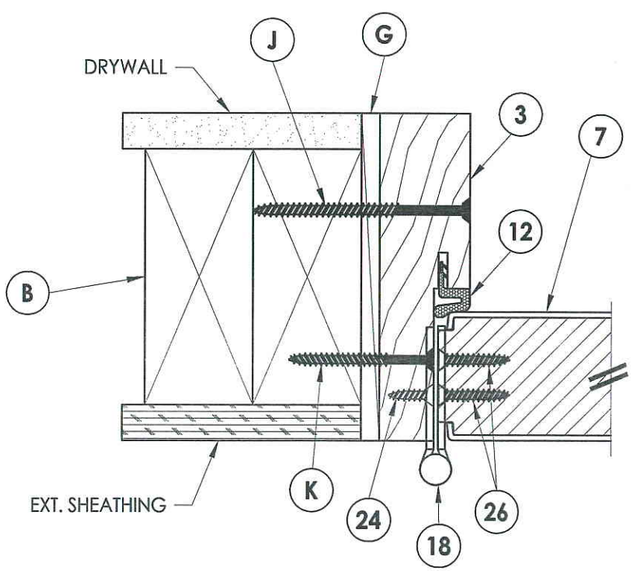

1/4 **HORIZONTAL CROSS SECTION**
Outswing shown
Inswing also approved

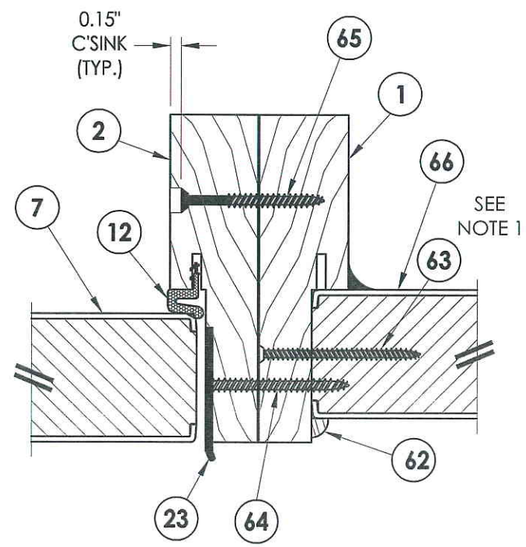

2/4 **HORIZONTAL CROSS SECTION**
Inswing shown
Outswing also approved

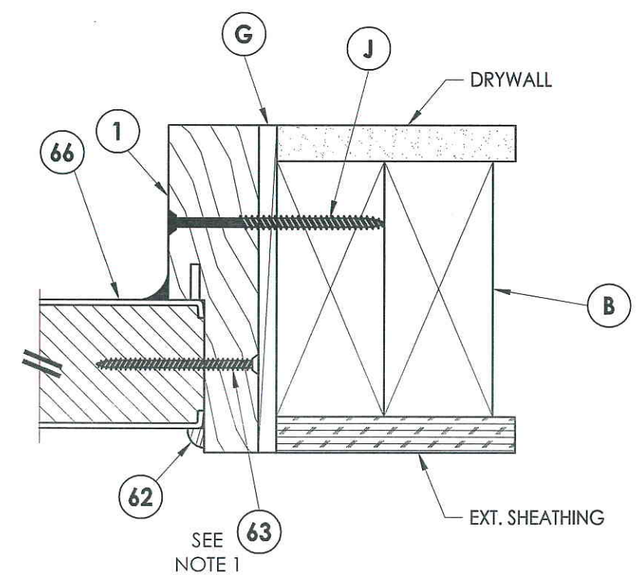

3/4 **HORIZONTAL CROSS SECTION**
Outswing shown
Inswing also approved

STATE OF TEXAS
LYNDON F. SCHMIDT
104123
LICENSED PROFESSIONAL ENGINEER
1-6-10

Documents Prepared By: Lyndon F. Schmidt, P.E.
TEXAS P.E. #104123
RW BUILDING CONSULTANTS, INC.
P.O. Box 230 Valrico FL. 33595
Phone No.: 813.659.9197
TEXAS BOARD OF PROFESSIONAL ENGINEERS
CERTIFICATE OF REGISTRATION # F-11852

PRODUCT: TRINITY GLASS INT'L PREMIUM LIPLITE FIBERGLASS

PART OR ASSEMBLY: HORIZONTAL CROSS SECTIONS

REVISIONS

NO.	DATE		BY
2	7/23/09	TDI PRODUCT EVALUATION UPDATE	AL
1	6/28/06	REVISED LOCKSET NOMENCLATURE	EW

DATE: 8/26/05
SCALE: N.T.S.
DWG. BY: EW
CHK. BY: LFS
DRAWING NO.: TX-593
SHEET 4 OF 9

© 2009 R.W. BUILDING CONSULTANTS INC.

R:\A - Projects\Project Folders\Proj 1101 - 1200\pf1122\D. RWBC Drawings\TX-593\TX-593.dwg, 4

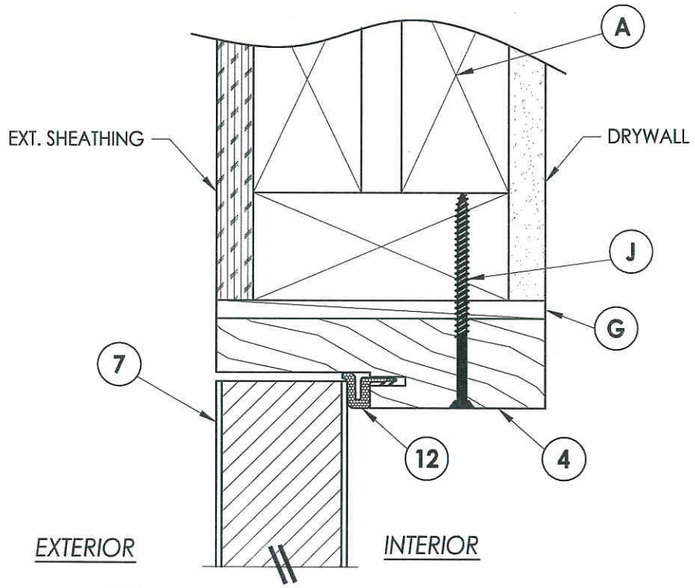

1/5 **VERTICAL CROSS SECTION**
Outswing shown
Inswing also approved

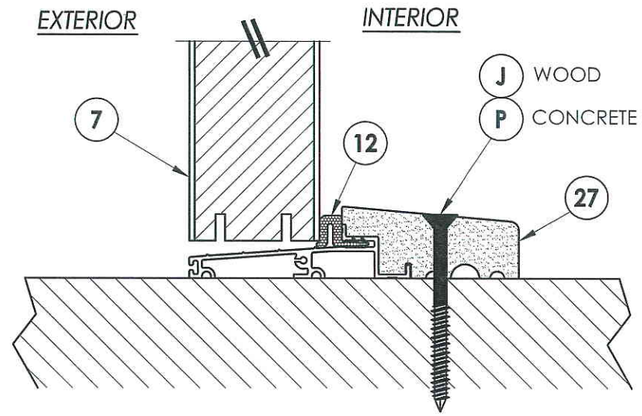

2/5 **VERTICAL CROSS SECTION**
Outswing configuration

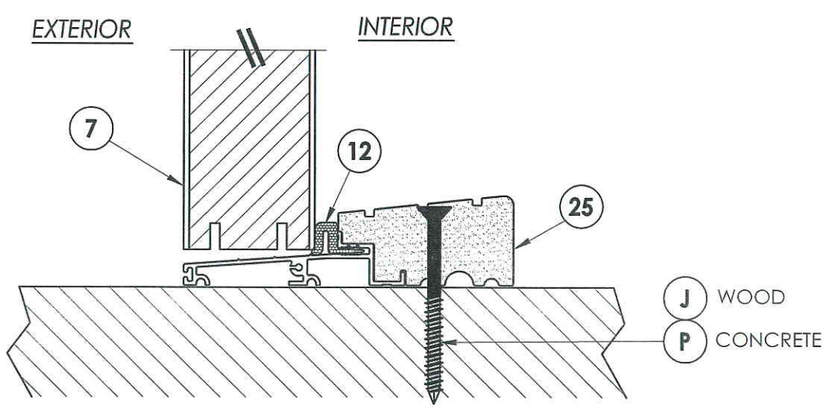

3/5 **VERTICAL CROSS SECTION**
Outswing configuration

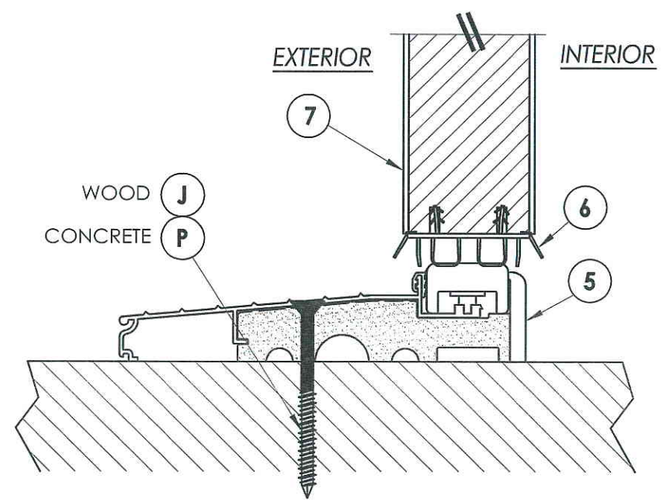

4/5 **VERTICAL CROSS SECTION**
Inswing configuration

STATE OF TEXAS
LYNDON F. SCHMIDT
104123
LICENSED
PROFESSIONAL ENGINEER
1-6-10

Documents Prepared By: Lyndon F. Schmidt, P.E.
TEXAS P.E. #104123
RW BUILDING CONSULTANTS, INC.
P.O. Box 230 Valrico FL. 33595
Phone No.: 813.659.9197
TEXAS BOARD OF PROFESSIONAL ENGINEERS
CERTIFICATE OF REGISTRATION # F-11852

PRODUCT: TRINITY GLASS INT'L PREMIUM LIPLITE FIBERGLASS

PART OR ASSEMBLY: VERTICAL CROSS SECTIONS

REVISIONS

NO.	DATE		BY
2	7/23/09	TDI PRODUCT EVALUATION UPDATE	AL
1	6/28/06	REVISED LOCKSET NOMENCLATURE	EW

DATE: 8/26/05
SCALE: N.T.S.
DWG. BY: EW
CHK. BY: LFS
DRAWING NO.: TX-593
SHEET 5 OF 9

© 2009 R.W. BUILDING CONSULTANTS INC.

R:\A - Projects\Project Folders\Proj 1101 - 1200\pf1122\D. RWBC Drawings\TX-593\TX-593.dwg, 5

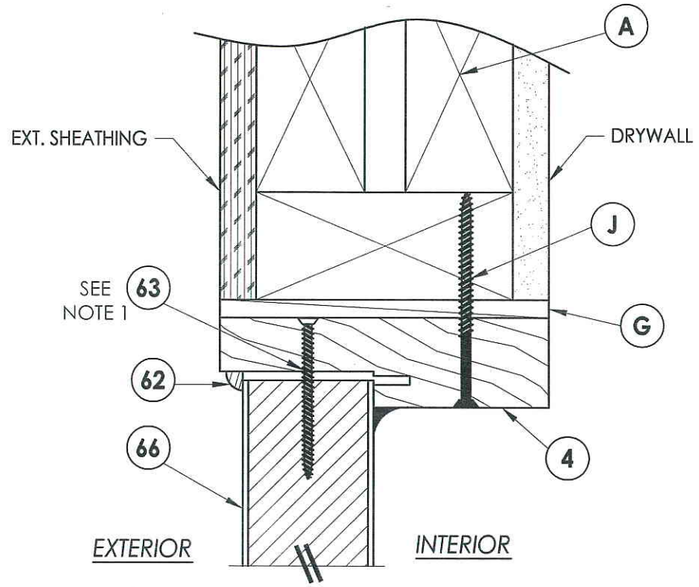

1/6 **VERTICAL CROSS SECTION**

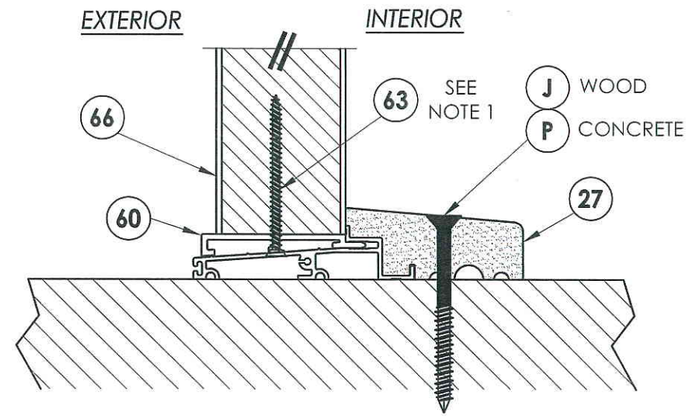

2/6 **VERTICAL CROSS SECTION**
Outswing sill

NOTE:

1. Screws thru head and sill jamb located 3" from each end and on center line.

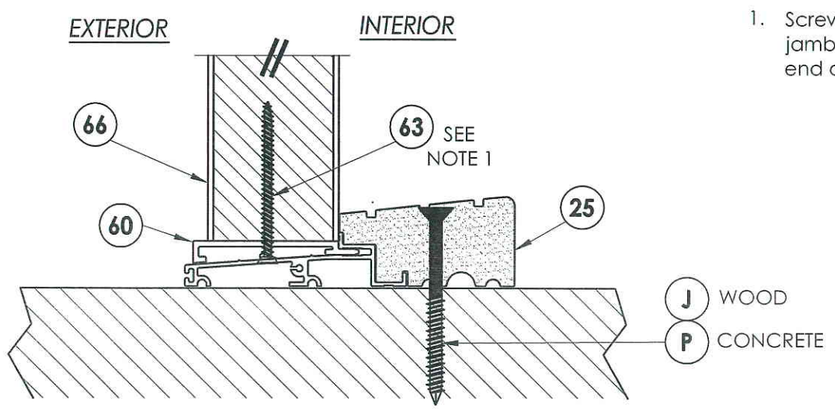

3/6 **VERTICAL CROSS SECTION**
Outswing sill - high dam

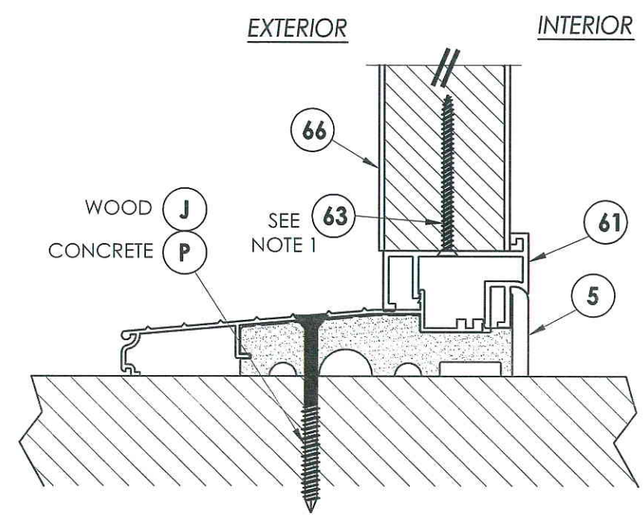

4/6 **VERTICAL CROSS SECTION**
Inswing sill

STATE OF TEXAS
LYNDON F. SCHMIDT
104123
LICENSED PROFESSIONAL ENGINEER
1-6-10

Documents Prepared By: Lyndon F. Schmidt, P.E.
TEXAS P.E. #104123
RW BUILDING CONSULTANTS, INC.
P.O. Box 230 Valrico FL. 33595
Phone No.: 813.659.9197
TEXAS BOARD OF PROFESSIONAL ENGINEERS
CERTIFICATE OF REGISTRATION # F-11852

PRODUCT: TRINITY GLASS INT'L PREMIUM LIPLITE FIBERGLASS

PART OR ASSEMBLY: VERTICAL CROSS SECTIONS

REVISIONS

NO.	DATE	BY
2	7/23/09	AL
1	6/28/06	EW

TDI PRODUCT EVALUATION UPDATE
REVISED LOCKSET NOMENCLATURE

DATE: 8/26/05
SCALE: N.T.S.
DWG. BY: EW
CHK. BY: LFS
DRAWING NO.: TX-593
SHEET 6 OF 9

© 2009 R.W. BUILDING CONSULTANTS INC.

R:\A - Projects\Project Folders\Proj 1101 - 1200\pf1122\D. RWBC Drawings\TX-593\TX-593.dwg, 6

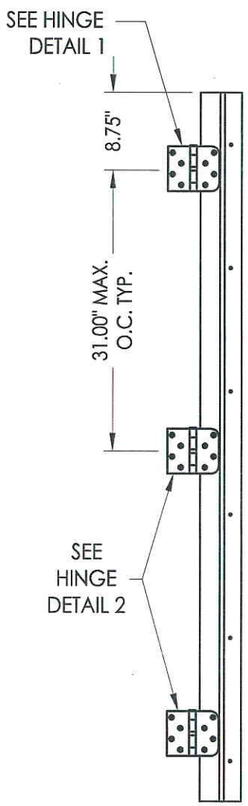

HINGE JAMB

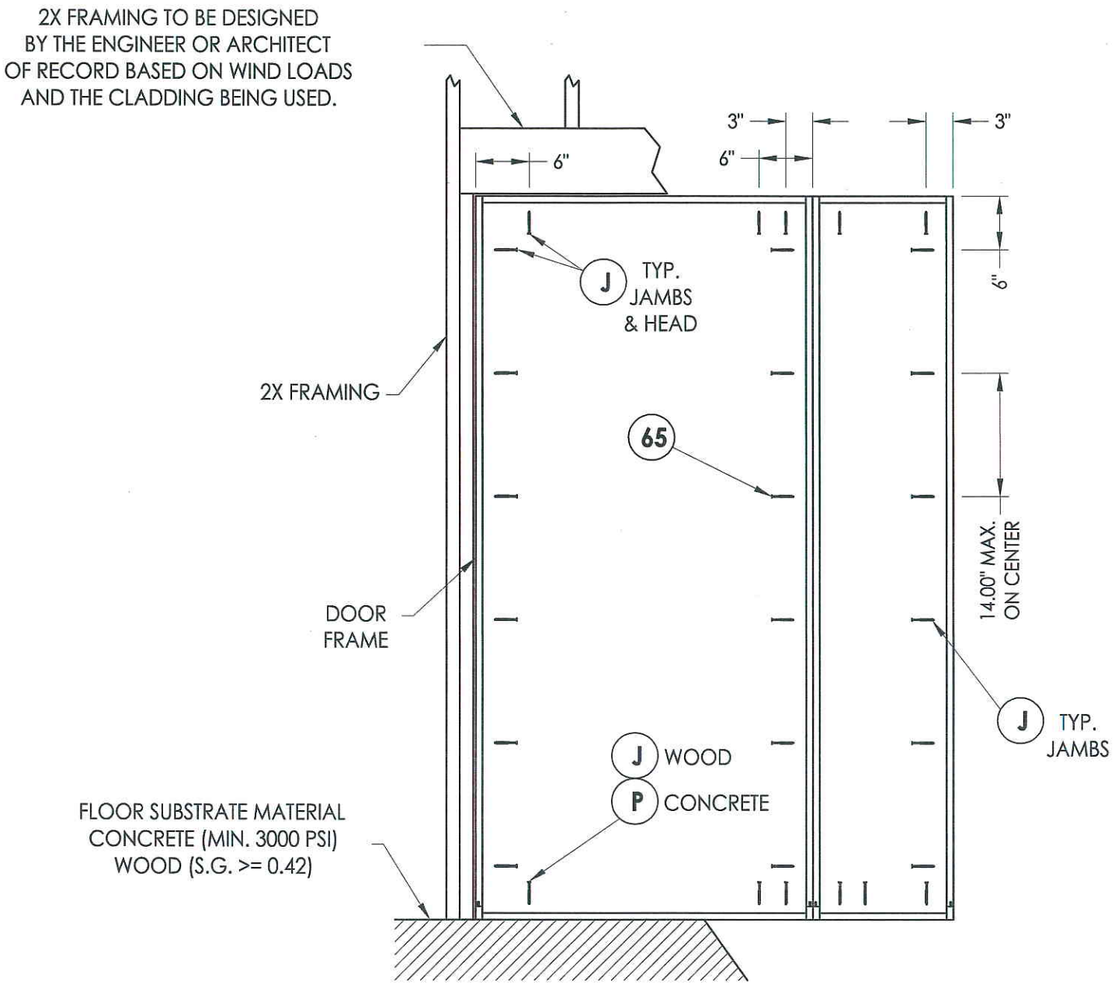

FRAME ANCHORING
Stud construction

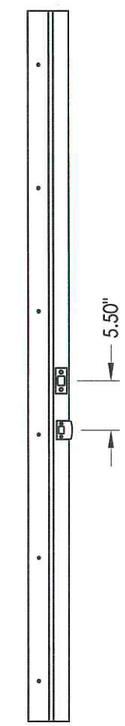

STRIKE MULLION

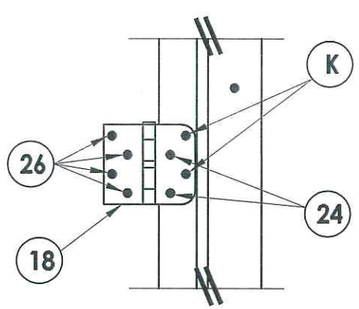

HINGE DETAIL 1

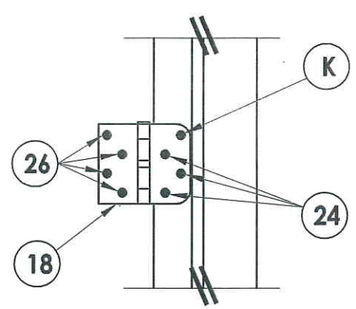

HINGE DETAIL 2

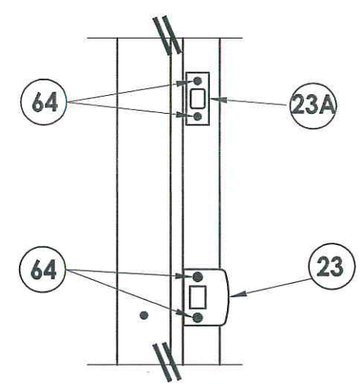

STRIKE PLATE DETAIL

STATE OF TEXAS
LYNDON F. SCHMIDT
104123
LICENSED PROFESSIONAL ENGINEER
1-6-10

Documents Prepared By: Lyndon F. Schmidt, P.E. TEXAS P.E. #104123

RW BUILDING CONSULTANTS, INC.
P.O. Box 230 Valrico FL. 33595
Phone No.: 813.659.9197

TEXAS BOARD OF PROFESSIONAL ENGINEERS CERTIFICATE OF REGISTRATION # F-11852

PRODUCT: TRINITY GLASS INT'L PREMIUM LIPLITE FIBERGLASS

PART OR ASSEMBLY: FRAME ANCHORING

REVISIONS

NO.	DATE		BY
2	7/23/09	TDI PRODUCT EVALUATION UPDATE	AL
1	6/28/06	REVISED LOCKSET NOMENCLATURE	EW

DATE: 8/26/05
SCALE: N.T.S.
DWG. BY: EW
CHK. BY: LFS
DRAWING NO.: TX-593
SHEET 7 OF 9

© 2009 R.W. BUILDING CONSULTANTS INC.

R:\A - Projects\Project Folders\Proj 1101 - 1200\pf1122\D. RWBC Drawings\TX-593\TX-593.dwg, 7

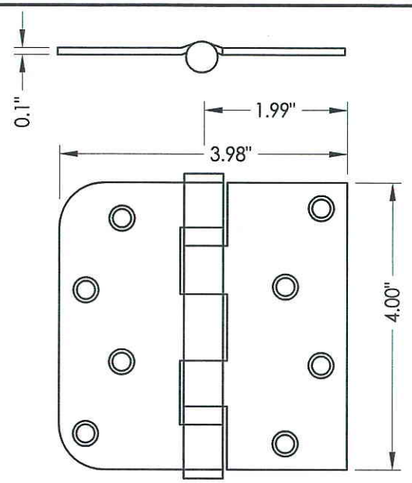

18 HINGE

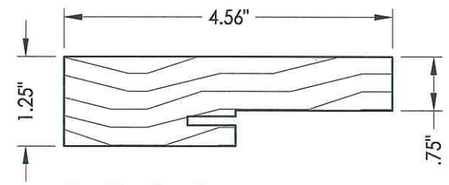

4 3 2 1 SIDE & HEAD JAMBS

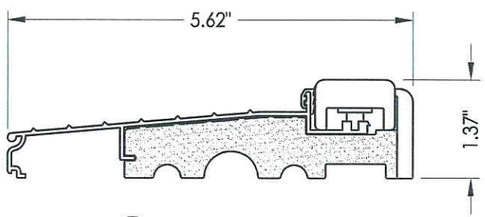

5 INSWING THRESHOLD

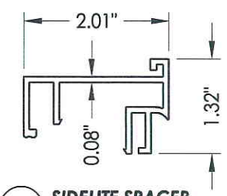

61 SIDELITE SPACER
Inswing

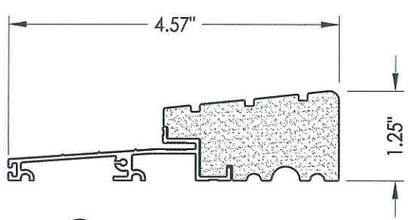

25 OUTSWING THRESHOLD
High-dam option

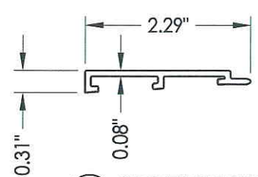

60 SIDELITE SPACER
Outswing

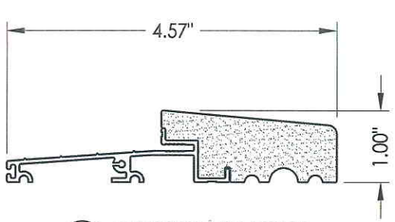

27 OUTSWING THRESHOLD

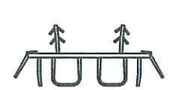

6 DOOR BOTTOM SWEEP

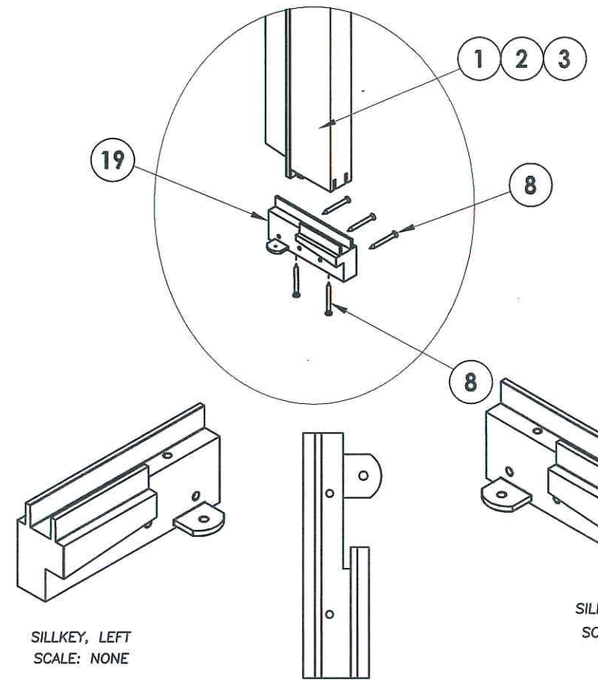

SILLKEY, LEFT
SCALE: NONE

SILLKEY, RIGHT
SCALE: NONE

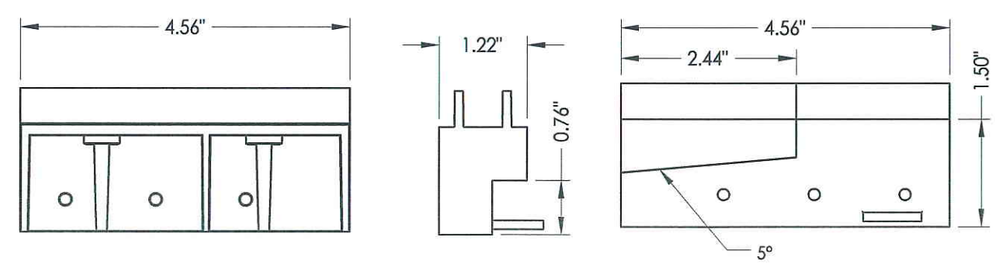

19 SILLKEY DETAILS
Optional

STATE OF TEXAS
LYNDON F. SCHMIDT
104123
LICENSED PROFESSIONAL ENGINEER
7.6.10

Documents Prepared By: Lyndon F. Schmidt, P.E.
TEXAS P.E. #104123

RW BUILDING CONSULTANTS, INC.
P.O. Box 230 Valrico FL. 33595
Phone No.: 813.659.9197

TEXAS BOARD OF PROFESSIONAL ENGINEERS
CERTIFICATE OF REGISTRATION # F-11852

PRODUCT: TRINITY GLASS INT'L PREMIUM LIPLITE FIBERGLASS

PART OR ASSEMBLY: COMPONENTS

REVISIONS

NO.	DATE		BY
2	7/23/09	TDI PRODUCT EVALUATION UPDATE	AL
1	6/28/06	REVISED LOCKSET NOMENCLATURE	EW

DATE: 8/26/05
SCALE: N.T.S.
DWG. BY: EW
CHK. BY: LFS
DRAWING NO.: TX-593
SHEET 8 OF 9

© 2009 R.W. BUILDING CONSULTANTS INC.

R:\A - Projects\Project Folders\Proj 1101 - 1200\pf1122\D. RWBC Drawings\TX-593\TX-593.dwg, 8

CONCRETE ANCHOR NOTES:

1. Substitution of equal concrete anchors from a different supplier may have different edge distance and center distance requirements.
2. Concrete anchor locations at the corners may be adjusted to maintain the min. edge distance to mortar joints. If concrete anchor locations noted as "MAX. ON CENTER" must be adjusted to maintain the min. edge distance to mortar joints, additional concrete anchors may be required to ensure the "MAX. ON CENTER" dimensions are not exceeded.
3. Concrete anchor table:

ANCHOR TYPE	ANCHOR SIZE	MIN. EMBEDMENT	MIN. CLEARANCE TO MASONRY EDGE	MIN. CLEARANCE TO ADJACENT ANCHOR
ITW	3/16"	1-3/4"	2-5/8"	2-1/4"
ELCO	3/16"	1-3/4"	1"	3"

BILL OF MATERIALS

ITEM	DESCRIPTION	MATERIAL	ITEM	DESCRIPTION	MATERIAL
A	2X HEADER FRAMING SG >= 0.42	WOOD	26	#9 X 1" PFH SCREW	STEEL
B	2X FRAMING SG >= 0.42	WOOD	27	OUTSWING THRESHOLD ALUMINUM W/ COMPOSITE SUBSTRATE	ALUM./ COMP.
G	MAX. 1/4" SHIM SPACE	WOOD	30	LATCH STILE - SG >= 0.42	LVL/PVC
J	#10 X 3" PFH WS	STEEL	31	LVL LOCK BLOCK	POPLAR
K	#9 X 2" PFH WS	STEEL	32	HINGE STILE - SG >= 0.42	LVL/PVC
P	3/16" X 2-3/4" ELCO OR ITW PFH CONCRETE SCREW	STEEL	33	TOP RAIL - POPLAR LVL & WPC COMBINATION	POPLAR/WPC
1	SIDELITE JAMB - FINGER-JOINT PINE - SG >= 0.42	WOOD	34	BOTTOM RAIL - POPLAR LVL & WPC COMBINATION	POPLAR/WPC
2	STRIKE JAMB - FINGER-JOINT PINE - SG >= 0.42	WOOD	39	FIBERGLASS SKIN 0.079" MIN. THICKNESS (Fy = 5,203 PSI MIN.)	FIBERGLASS
3	HINGE JAMB - FINGER-JOINT PINE - SG >= 0.42	WOOD	40	#8 X 1-1/8" SELF THREADING SCREW	STEEL
4	HEAD - FINGER-JOINT PINE - SG >= 0.42	WOOD	42	ALUMINUM & BUTYL SPACER SYSTEM	ALUM./BUTYL
5	INSWING THRESHOLD ALUMINUM W/ COMPOSITE SUBSTRATE	ALUMINUM	44	HOT MELT SEALANT / SILICONE	-
6	DOOR BOTTOM SWEEP	PVC	45	LITE FRAME	PC/ASA
7	DOOR PANEL - SEE DOOR PANEL DETAIL SHEET FOR CONSTRUCTION DETAILS	-	46	FOAM CORE	POLYURETHANE
8	#6 X 1-1/4" PFH DRYWALL SCREW	STEEL	60	SIDELITE SPACER - OUTSWING	PVC
12	WEATHER STRIP QEBD650 Q-LON	-	61	SIDELITE SPACER - INSWING	PVC
18	3.983" X 4.0" HINGE MIN 0.098" THICK	STEEL	62	QUARTER ROUND	WOOD
19	SILLKEY	PC/ASA	63	#8 X 2-1/4" PFH SCREW	STEEL
21	LOCK (SEE LOCK & DEADBOLT RATINGS CHART)	STEEL	64	#8 X 2" PFH SCREW	STEEL
22	DEADBOLT (SEE LOCK & DEADBOLT RATINGS CHART)	STEEL	65	#10 X 2" PFH SCREW	STEEL
23	STRIKE PLATE	STEEL	66	SIDELITE PANEL - SEE SIDELITE PANEL DETAIL SHEET FOR CONSTRUCTION DETAILS	-
23A	DEADBOLT PLATE	STEEL	73	LVL SIDELITE TOP RAIL (FULL LITE)	POPLAR
24	#9 X 5/8" PFH SCREW	STEEL	74	LVL SIDELITE BOTTOM RAIL (FULL LITE)	POPLAR
25	OUTSWING HIGH-DAM THRESHOLD ALUMINUM W/ COMPOSITE SUBSTRATE	ALUM./ COMP.	75	LVL SIDELITE STILE (FULL LITE)	POPLAR

STATE OF TEXAS
LYNDON F. SCHMIDT
104123
LICENSED PROFESSIONAL ENGINEER
7-6-10

Documents Prepared By: Lyndon F. Schmidt, P.E.
TEXAS P.E. #104123

RW BUILDING CONSULTANTS, INC.
P.O. Box 230 Valrico FL. 33595
Phone No.: 813.659.9197

TEXAS BOARD OF PROFESSIONAL ENGINEERS
CERTIFICATE OF REGISTRATION # F-11852

PRODUCT: TRINITY GLASS INT'L PREMIUM LIPLITE FIBERGLASS

PART OR ASSEMBLY: BILL OF MATERIALS

REVISIONS

NO.	DATE		BY
2	7/23/09	TDI PRODUCT EVALUATION UPDATE	AL
1	6/28/06	REVISED LOCKSET NOMENCLATURE	EW

DATE: 8/26/05
SCALE: N.T.S.
DWG. BY: EW
CHK. BY: LFS
DRAWING NO.: TX-593
SHEET 9 OF 9

© 2009 R.W. BUILDING CONSULTANTS INC.

R:\A - Projects\Project Folders\Proj 1101 - 1200\pf1122\D. RWBC Drawings\TX-593\TX-593.dwg, 9