Trinity Glass INTERNATIONAL

4621 192nd STREET EAST TACOMA, WA 98446

6'0 X 6'8 GLAZED PREMIUM FIBERGLASS DOUBLE DOOR INSWING / OUTSWING

"NON-IMPACT"

EVALUATED FOR USE IN THE STATE OF TEXAS

The Trinity Glazed Premium Fiberglass Double Door described herein complies with the 2006 International Residential Code (IRC), Sections R301 & R613 and the 2006 International Building Code (IBC), Sections 1405.12, 1609, 1714.5, 2403 and 2404 (including Texas revisions) subject to the following conditions:

1. Anchors shall be as listed and spaced as shown in the details. Anchor embedment to base material shall be beyond wall dressing or stucco.
2. When used in areas requiring wind-borne debris protection this product is required to be protected with an impact resistant covering that complies with Section R301.2.1.2 of the IRC and Section 1609.1.2 of the IBC.
3. Allowable design pressure requirements must be equal to or less than the design pressure rating shown in the design pressure chart, sheet 1 of this drawing.
4. Conditions not covered by this drawing are subject to further engineering analysis.

SUPPORTING DOCUMENTS & EVIDENCE

1. Testing per ASTM E330-02 as performed by Testing Evaluation Laboratories Inc. and reported in test report numbers TEL 08-01370020, TEL 06-0223-3 and TEL 05-0411-4, signed by Wendell W. Haney, P.E.
2. Calculations (Anchoring and Glass load resistance report ASTM E1300-04) prepared by Lyndon F. Schmidt, P.E.
3. Certificate of Participation issued by the National Accreditation and Management Institute, Inc., certifying that Trinity Glass Int'l is manufacturing products within a Quality Assurance program.

TABLE OF CONTENTS

SHEET #	DESCRIPTION
1	Typical elevations, design pressures & general notes
2	Door panel construction details & glazing details
3	Horizontal cross sections
4	Vertical cross sections
5	Frame anchoring
6	Components
7	Endura astragal details
8	TRC astragal details
9	PVC astragal details
10	Columbia astragal details
11	Bill of materials

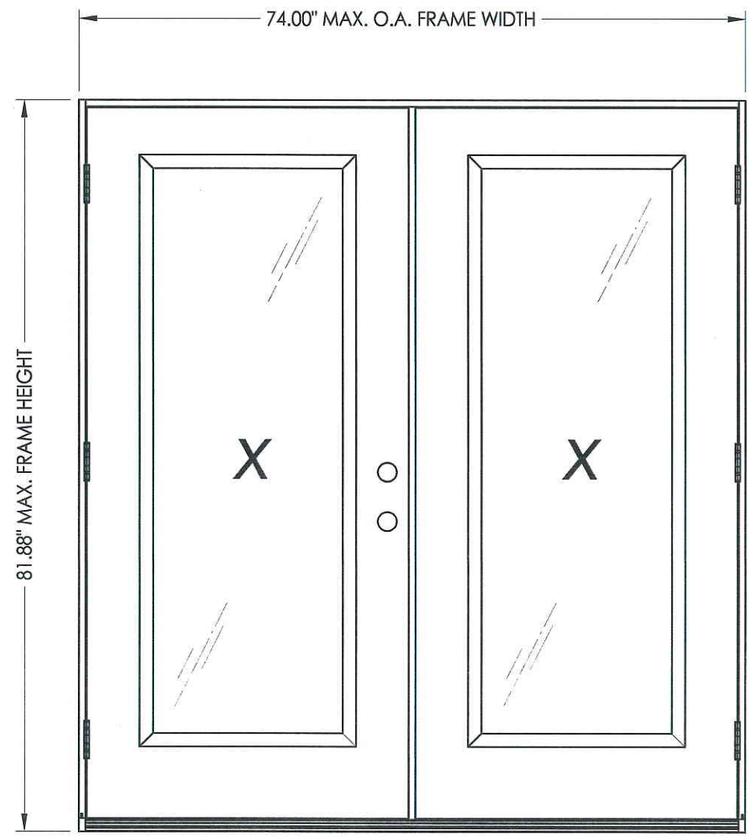

ASTRAGAL TYPE	SWING	MAX. FRAME DIMENSION	GLASS TYPE	DESIGN PRESSURE PSF)	
				POSITIVE	NEGATIVE
ENDURA	INSWING	74.00" x 81.88"	G1	+45.0	-50.0
	OUTSWING	74.00" x 80.75"		+45.0	-45.0
TRC	INSWING	74.00" x 81.88"	G1	+65.0	-65.0
	OUTSWING	74.00" x 80.75"		+65.0	-65.0
PVC	INSWING	74.00" x 81.88"	G1	+43.0	-47.0
	OUTSWING	74.00" x 80.75"		+43.0	-43.0
COLUMBIA	OUTSWING	74.00" x 80.75"	G1	+50.0	-50.0

STATE OF TEXAS · LYNDON F. SCHMIDT · 104123 · LICENSED PROFESSIONAL ENGINEER

1-6-10

Documents Prepared By: Lyndon F. Schmidt, P.E.
TEXAS P.E. #104123

RW BUILDING CONSULTANTS, INC.
P.O. Box 230 Valrico FL. 33595
Phone No.: 813.659.9197

TEXAS BOARD OF PROFESSIONAL ENGINEERS
CERTIFICATE OF REGISTRATION # F-11852

PRODUCT: TRINITY GLASS INT'L PREMIUM LIPLITE FIBERGLASS

PART OR ASSEMBLY: TYPICAL ELEVATION, DESIGN PRESSURES & GENERAL NOTES

NO.	DATE	REVISIONS	BY
2	7/23/09	TDI PRODUCT EVALUATION UPDATE	AL
1	6/28/06	REVISED LOCKSET NOMENCLATURE	EW

DATE: 8/26/05
SCALE: N.T.S.
DWG. BY: EW
CHK. BY: LFS
DRAWING NO.: TX-592
SHEET 1 OF 11

© 2009 R.W. BUILDING CONSULTANTS INC.

R:\A - Projects\Project Folders\Proj 1101 - 1200\pf1122\D. RWBC Drawings\TX-592\TX-592.dwg, TX-592

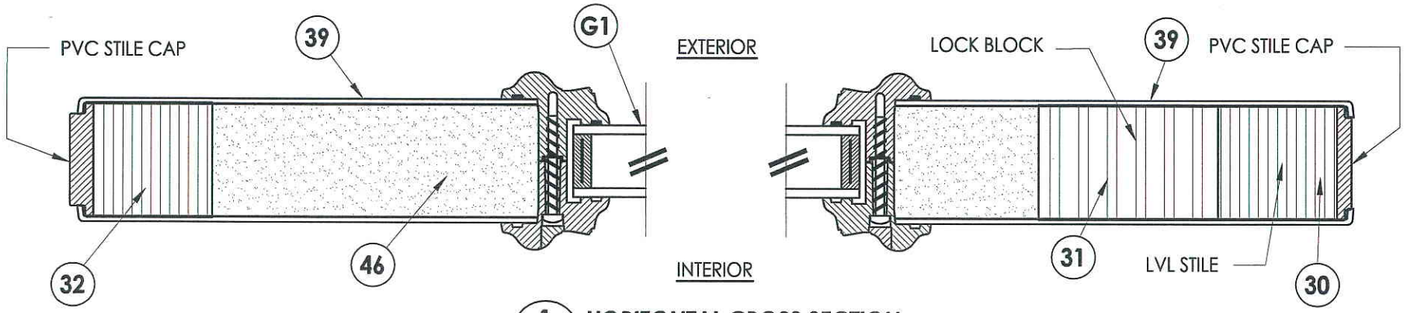

1/2 HORIZONTAL CROSS SECTION

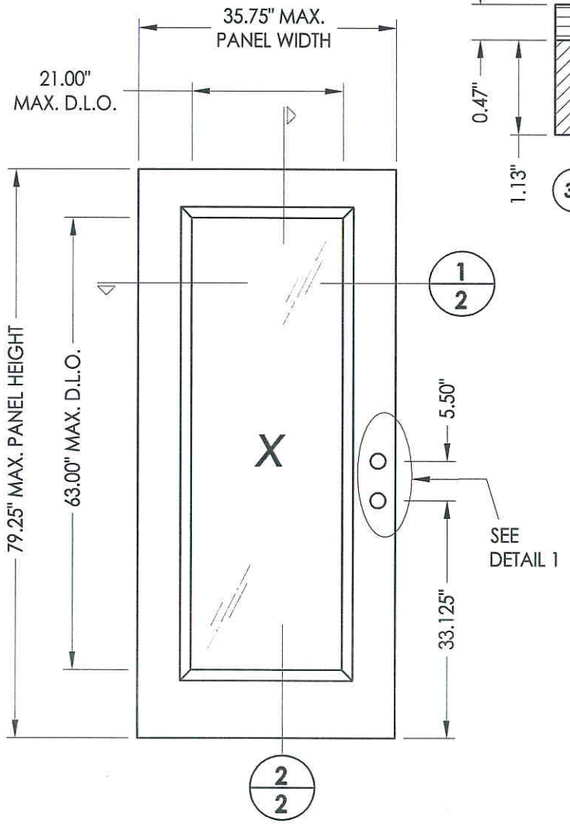

7 PREMIUM LIPLITE FIBERGLASS DOOR

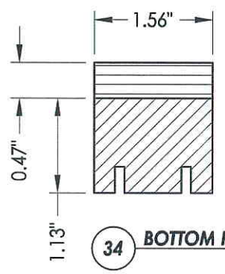

34 BOTTOM RAIL

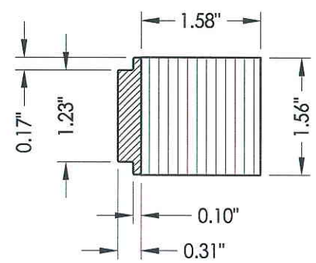

32 HINGE STILE

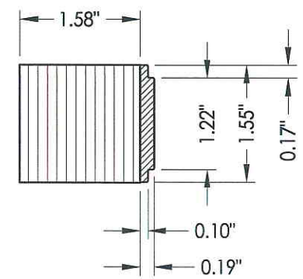

30 LATCH STILE

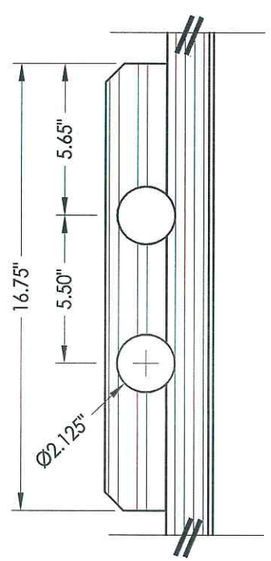

DETAIL 1

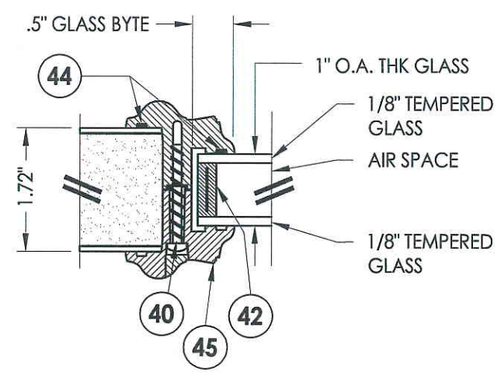

G1 GLAZING DETAIL

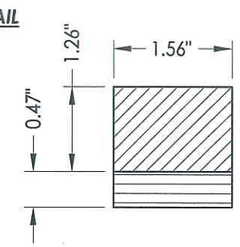

33 TOP RAIL

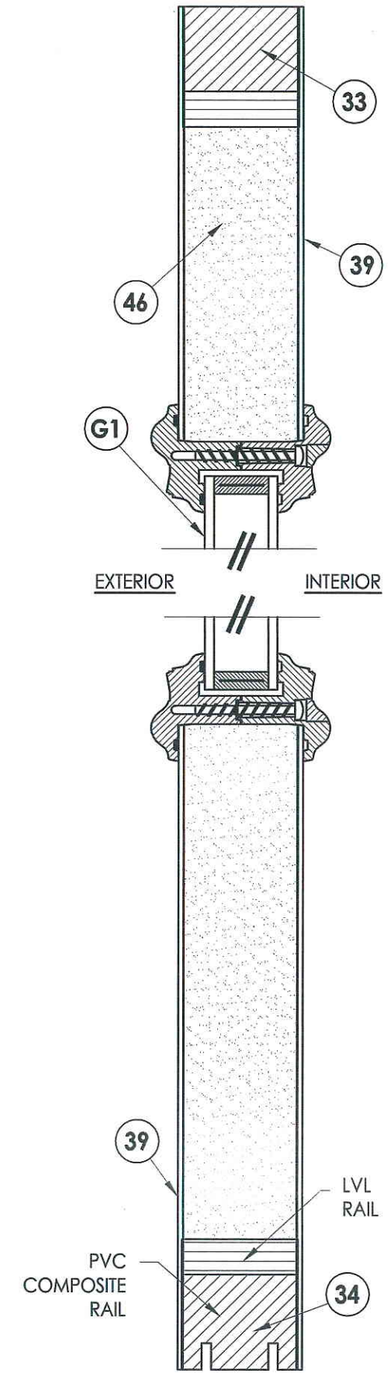

2/2 VERTICAL CROSS SECTION

STATE OF TEXAS
LYNDON F. SCHMIDT
104123
LICENSED
PROFESSIONAL ENGINEER
1.6.10

Documents Prepared By: Lyndon F. Schmidt, P.E.
TEXAS P.E. #104123

RW BUILDING CONSULTANTS, INC.
P.O. Box 230 Valrico FL. 33595
Phone No.: 813.659.9197

TEXAS BOARD OF PROFESSIONAL ENGINEERS
CERTIFICATE OF REGISTRATION # F-11852

PRODUCT: TRINITY GLASS INT'L PREMIUM LIPLITE FIBERGLASS

PART OR ASSEMBLY: DOOR PANEL CONSTRUCTION DETAILS AND GLAZING DETAILS

REVISIONS

NO.	DATE		BY
2	7/23/09	TDI PRODUCT EVALUATION UPDATE	AL
1	6/28/06	REVISED LOCKSET NOMENCLATURE	EW

DATE: 8/26/05
SCALE: N.T.S.
DWG. BY: EW
CHK. BY: LFS
DRAWING NO.: TX-592
SHEET 2 OF 11

© 2009 R.W. BUILDING CONSULTANTS INC.

R:\A - Projects\Project Folders\Proj 1101 - 1200\pf1122\D. RWBC Drawings\TX-592\TX-592.dwg, 2

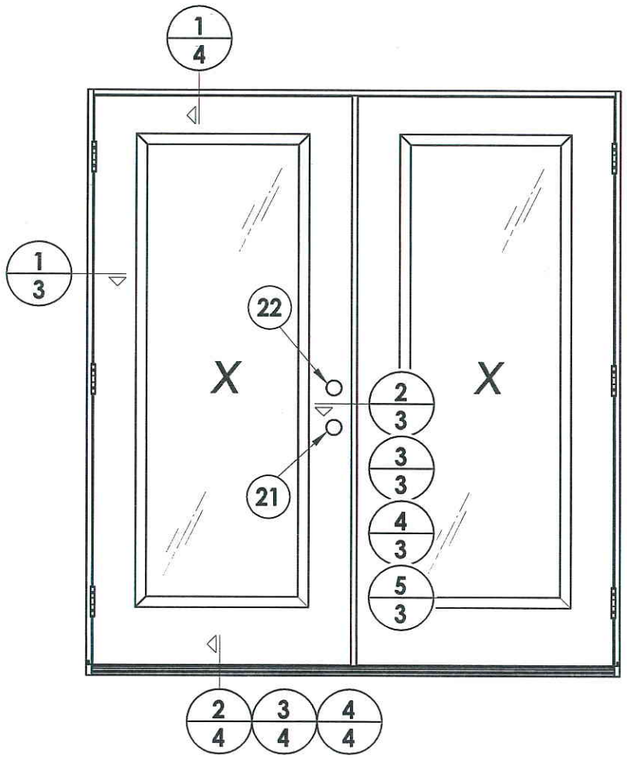

LOCK & DEADBOLT RATINGS CHART				
MANUFACTURER	MODEL	ITEM #	MAX. DESIGN PRESSURE (PSF) POSITIVE	MAX. DESIGN PRESSURE (PSF) NEGATIVE
KWIKSET	LOCK: 740	21	+65.0	-65.0
	DEADBOLT: 780	22		
KWIKSET	LOCK: COMBO 660	21	+65.0	-65.0
	DEADBOLT: COMBO 660	22		
SCHLAGE	LOCK: MAX. SECURITY	21	+60.0	-60.0
	DEADBOLT: MAX. SECURITY	22		

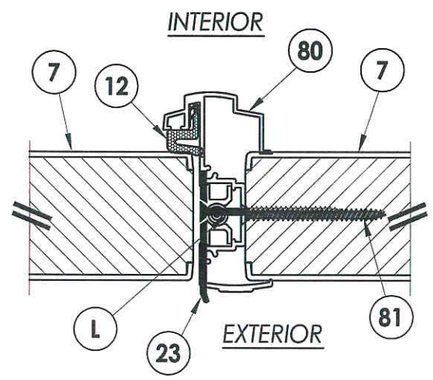

5/3 **HORIZONTAL CROSS SECTION**
Columbia astragal

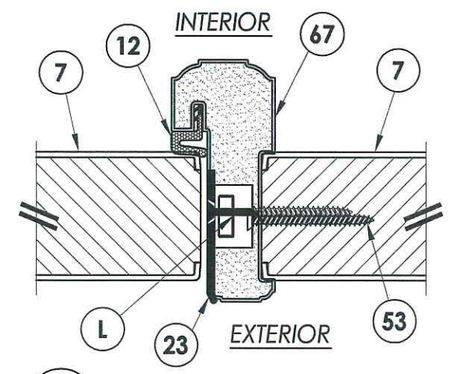

4/3 **HORIZONTAL CROSS SECTION**
PVC astragal

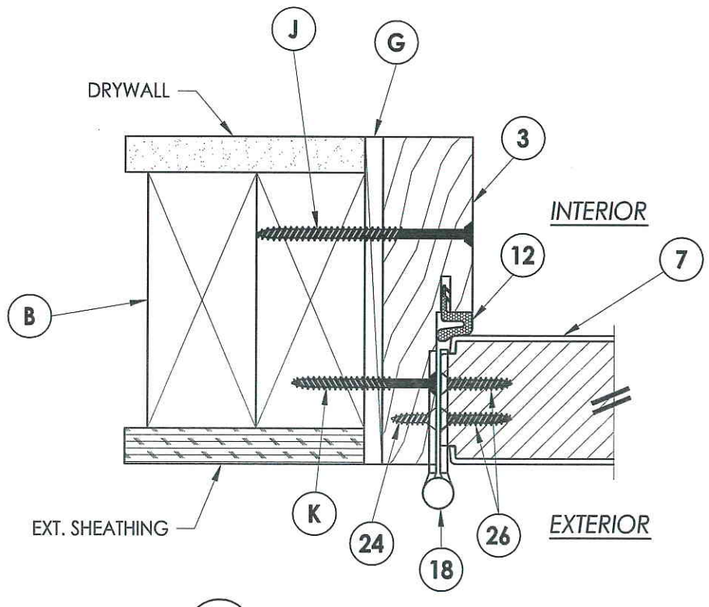

1/3 **HORIZONTAL CROSS SECTION**
Outswing shown
Inswing also approved

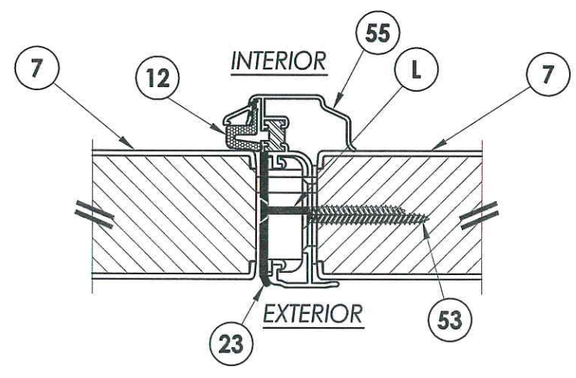

2/3 **HORIZONTAL CROSS SECTION**
Endura astragal

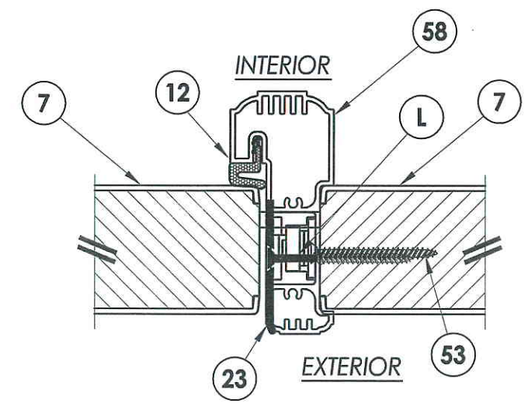

3/3 **HORIZONTAL CROSS SECTION**
TRC astragal

STATE OF TEXAS
LYNDON F. SCHMIDT
104123
LICENSED PROFESSIONAL ENGINEER
1.6.10

Documents Prepared By: Lyndon F. Schmidt, P.E.
TEXAS P.E. #104123
RW BUILDING CONSULTANTS, INC.
P.O. Box 230 Valrico FL. 33595
Phone No.: 813.659.9197
TEXAS BOARD OF PROFESSIONAL ENGINEERS
CERTIFICATE OF REGISTRATION # F-11852

PRODUCT: TRINITY GLASS INT'L PREMIUM LIPLITE FIBERGLASS

PART OR ASSEMBLY: HORIZONTAL CROSS SECTIONS

REVISIONS

NO.	DATE		BY
2	7/23/09	TDI PRODUCT EVALUATION UPDATE	AL
1	6/28/06	REVISED LOCKSET NOMENCLATURE	EW

DATE: 8/26/05
SCALE: N.T.S.
DWG. BY: EW
CHK. BY: LFS
DRAWING NO.: TX-592
SHEET 3 OF 11

© 2009 R.W. BUILDING CONSULTANTS INC.

R:\A - Projects\Project Folders\Proj 1101 - 1200\pf1122\D. RWBC Drawings\TX-592\TX-592.dwg, 3

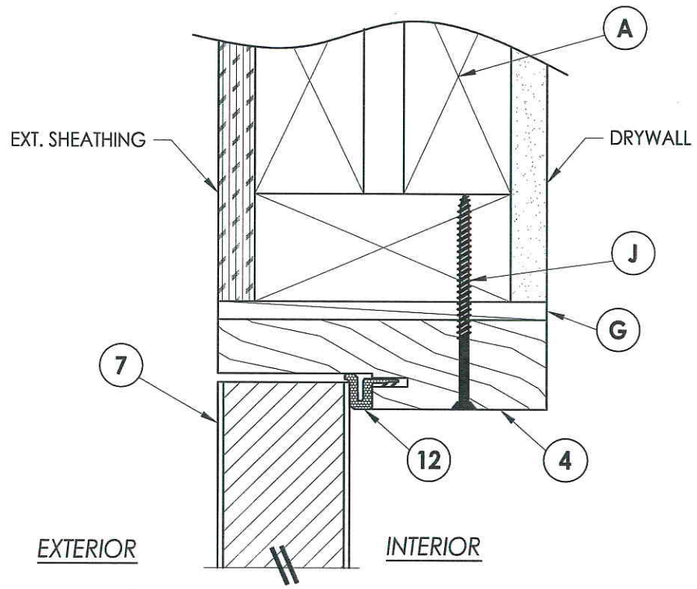

1/4 VERTICAL CROSS SECTION
Outswing shown
Inswing also approved

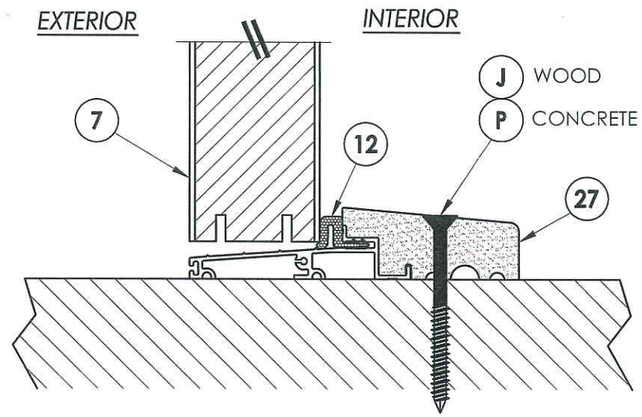

2/4 VERTICAL CROSS SECTION
Outswing configuration

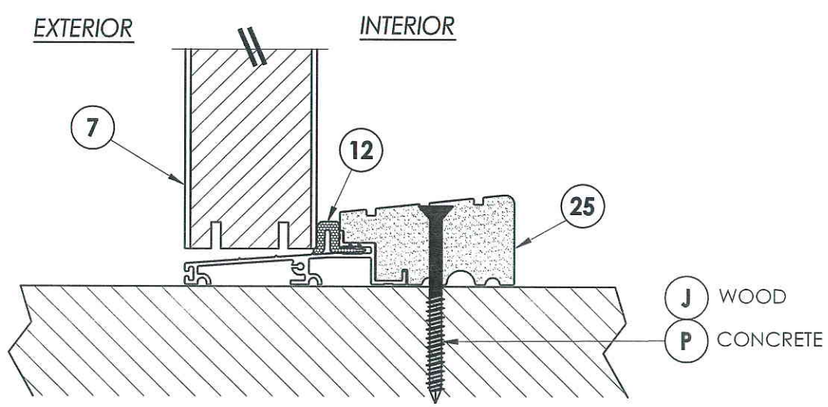

3/4 VERTICAL CROSS SECTION
Outswing configuration

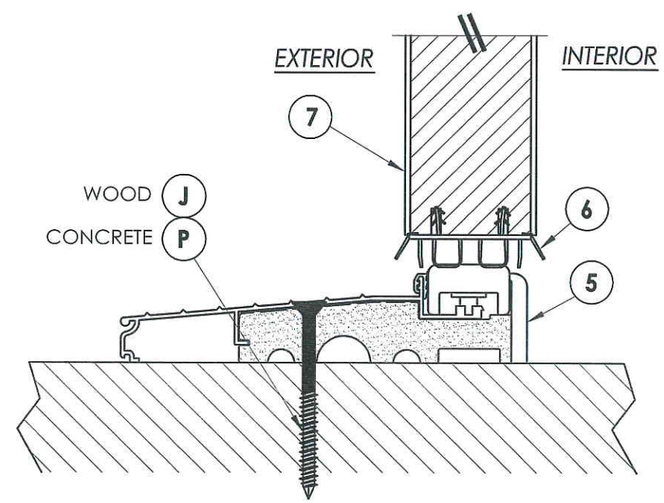

4/4 VERTICAL CROSS SECTION
Inswing configuration

STATE OF TEXAS
LYNDON F. SCHMIDT
104123
LICENSED PROFESSIONAL ENGINEER
7-6-10

Documents Prepared By: Lyndon F. Schmidt, P.E.
TEXAS P.E. #104123

RW BUILDING CONSULTANTS, INC.
P.O. Box 230 Valrico FL. 33595
Phone No.: 813.659.9197

TEXAS BOARD OF PROFESSIONAL ENGINEERS
CERTIFICATE OF REGISTRATION # F-11852

PRODUCT: TRINITY GLASS INT'L PREMIUM LIPLITE FIBERGLASS

PART OR ASSEMBLY: VERTICAL CROSS SECTIONS

REVISIONS

NO.	DATE		BY
2	7/23/09	TDI PRODUCT EVALUATION UPDATE	AL
1	6/28/06	REVISED LOCKSET NOMENCLATURE	EW

DATE: 8/26/05
SCALE: N.T.S.
DWG. BY: EW
CHK. BY: LFS
DRAWING NO.: TX-592
SHEET 4 OF 11

© 2009 R.W. BUILDING CONSULTANTS INC.

R:\A - Projects\Project Folders\Proj 1101 - 1200\pf1122\D. RWBC Drawings\TX-592\TX-592.dwg, 4

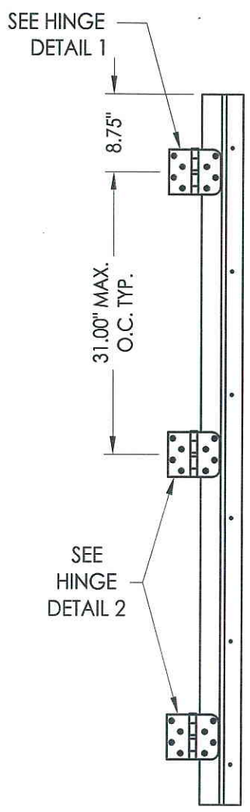

HINGE JAMB

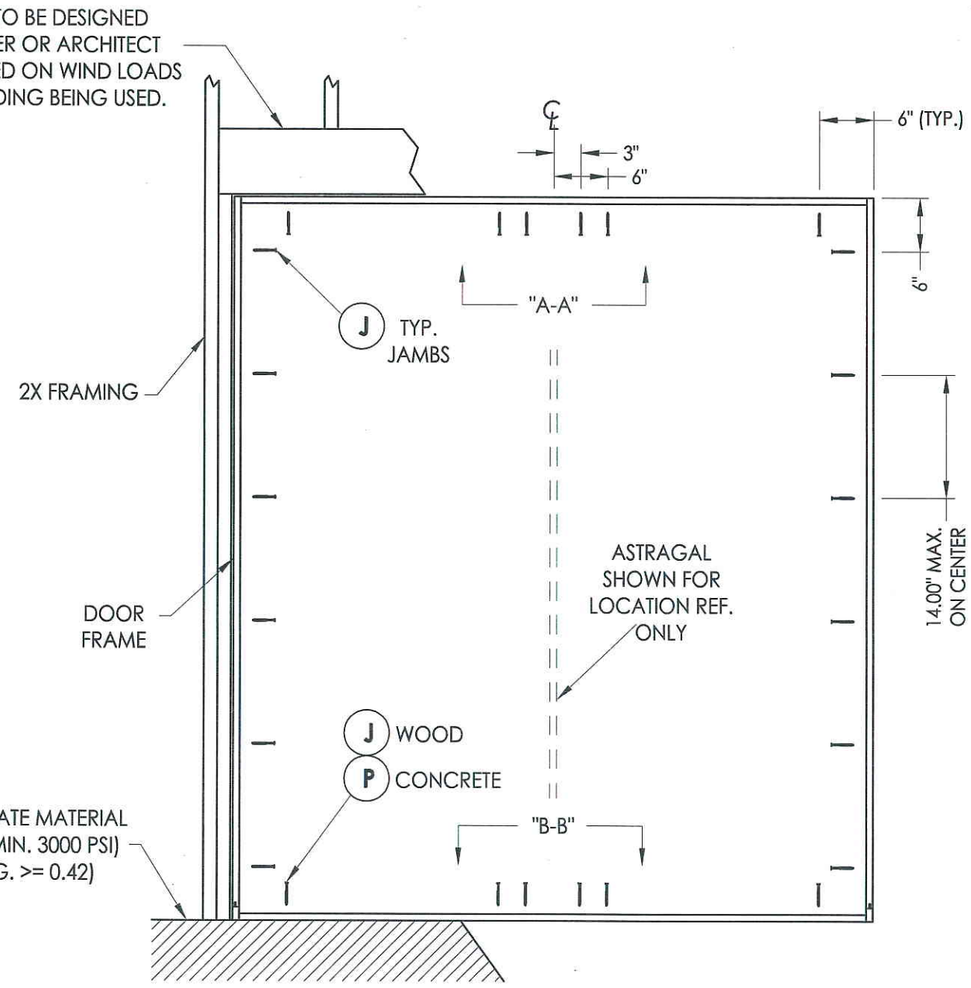

FRAME ANCHORING
Stud construction

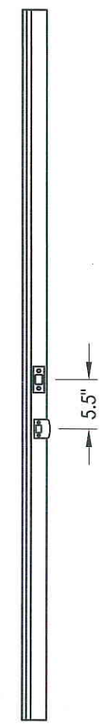

ASTRAGAL STRIKE

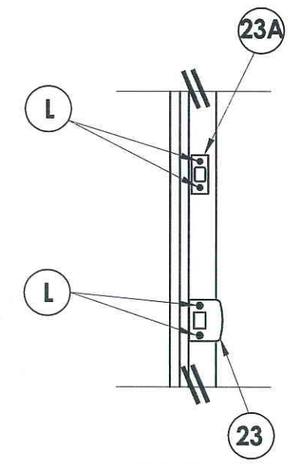

STRIKE PLATE DETAIL
Astragal

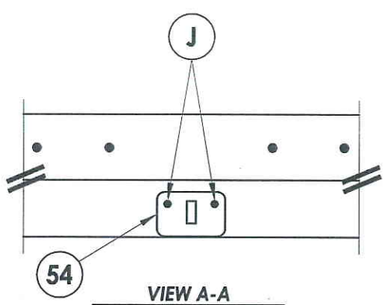

VIEW A-A
Astragal strike @ head

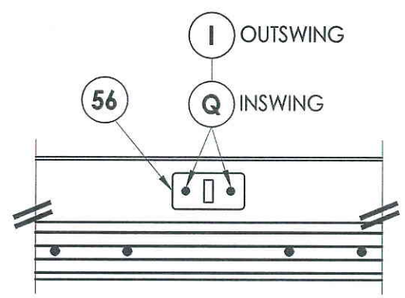

VIEW B-B
Astragal strike @ sill

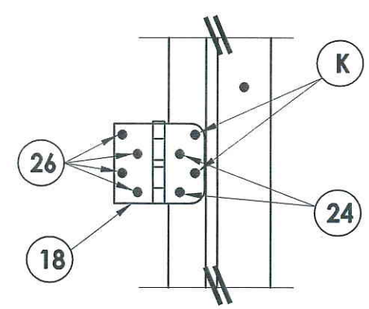

HINGE DETAIL 1

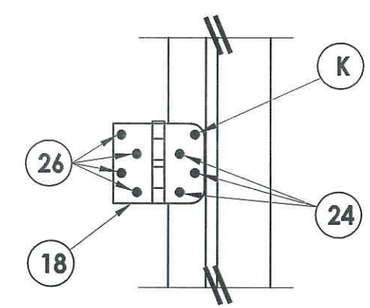

HINGE DETAIL 2

STATE OF TEXAS
LYNDON F. SCHMIDT
104123
LICENSED PROFESSIONAL ENGINEER
1-6-10

Documents Prepared By: Lyndon F. Schmidt, P.E.
TEXAS P.E. #104123
RW BUILDING CONSULTANTS, INC.
P.O. Box 230 Valrico FL. 33595
Phone No.: 813.659.9197
TEXAS BOARD OF PROFESSIONAL ENGINEERS
CERTIFICATE OF REGISTRATION # F-11852

PRODUCT: TRINITY GLASS INT'L PREMIUM LIPLITE FIBERGLASS

PART OR ASSEMBLY: FRAME ANCHORING

REVISIONS

NO.	DATE		BY
2	7/23/09	TDI PRODUCT EVALUATION UPDATE	AL
1	6/28/06	REVISED LOCKSET NOMENCLATURE	EW

DATE: 8/26/05
SCALE: N.T.S.
DWG. BY: EW
CHK. BY: LFS
DRAWING NO.: TX-592
SHEET 5 OF 11

© 2009 R.W. BUILDING CONSULTANTS INC.

R:\A - Projects\Project Folders\Proj 1101 - 1200\pf1122\D. RWBC Drawings\TX-592\TX-592.dwg, 5

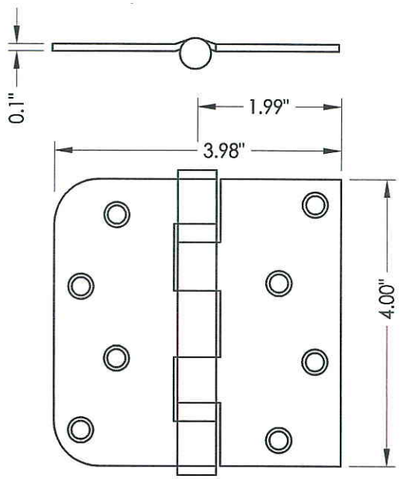

18 HINGE

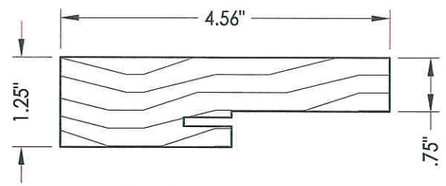

4 3 SIDE & HEAD JAMBS

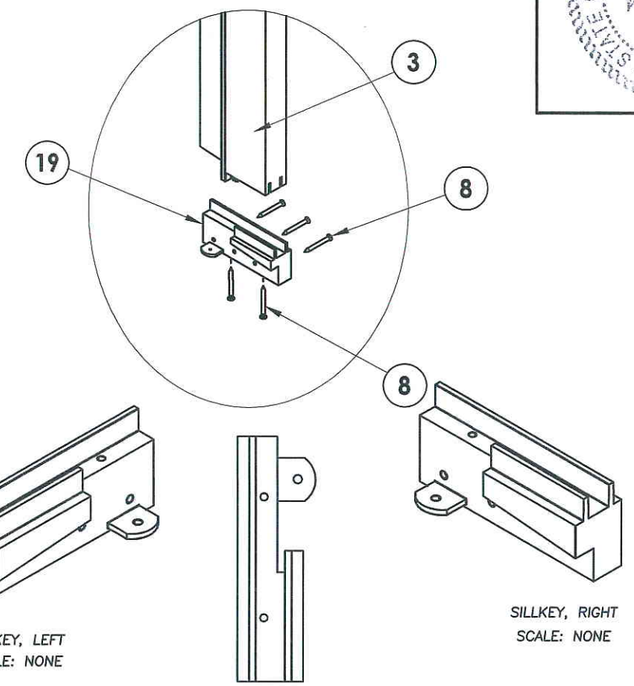

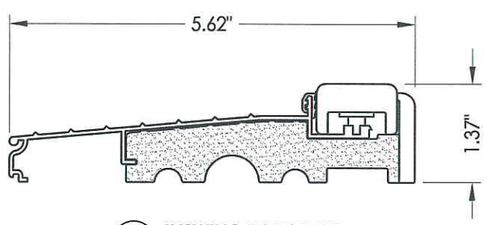

5 INSWING THRESHOLD

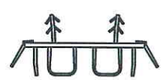

6 DOOR BOTTOM SWEEP

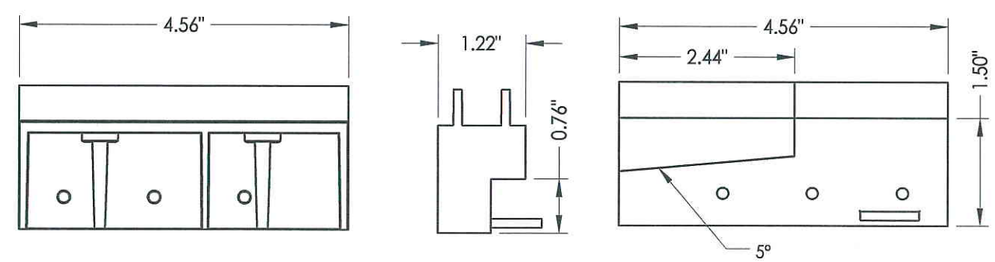

19 SILLKEY DETAILS
Optional

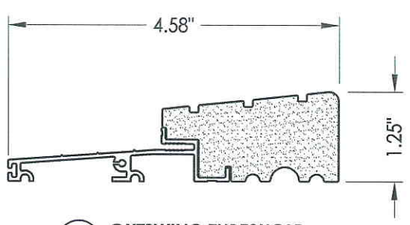

25 OUTSWING THRESHOLD
High-dam option

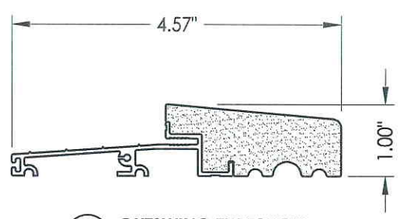

27 OUTSWING THRESHOLD

STATE OF TEXAS
LYNDON F. SCHMIDT
104123
LICENSED PROFESSIONAL ENGINEER
1-6-10

Documents Prepared By: Lyndon F. Schmidt, P.E.
TEXAS P.E. #104123

RW BUILDING CONSULTANTS, INC.
P.O. Box 230 Valrico FL. 33595
Phone No.: 813.659.9197

TEXAS BOARD OF PROFESSIONAL ENGINEERS
CERTIFICATE OF REGISTRATION # F-11852

PRODUCT: TRINITY GLASS INT'L PREMIUM LIPLITE FIBERGLASS

PART OR ASSEMBLY: COMPONENTS

REVISIONS

NO.	DATE		BY
2	7/23/09	TDI PRODUCT EVALUATION UPDATE	AL
1	6/28/06	REVISED LOCKSET NOMENCLATURE	EW

DATE: 8/26/05
SCALE: N.T.S.
DWG. BY: EW
CHK. BY: LFS
DRAWING NO.: TX-592
SHEET 6 OF 11

© 2009 R.W. BUILDING CONSULTANTS INC.

R:\A - Projects\Project Folders\Proj 1101 - 1200\pf1122\D. RWBC Drawings\TX-592\TX-592.dwg, 6

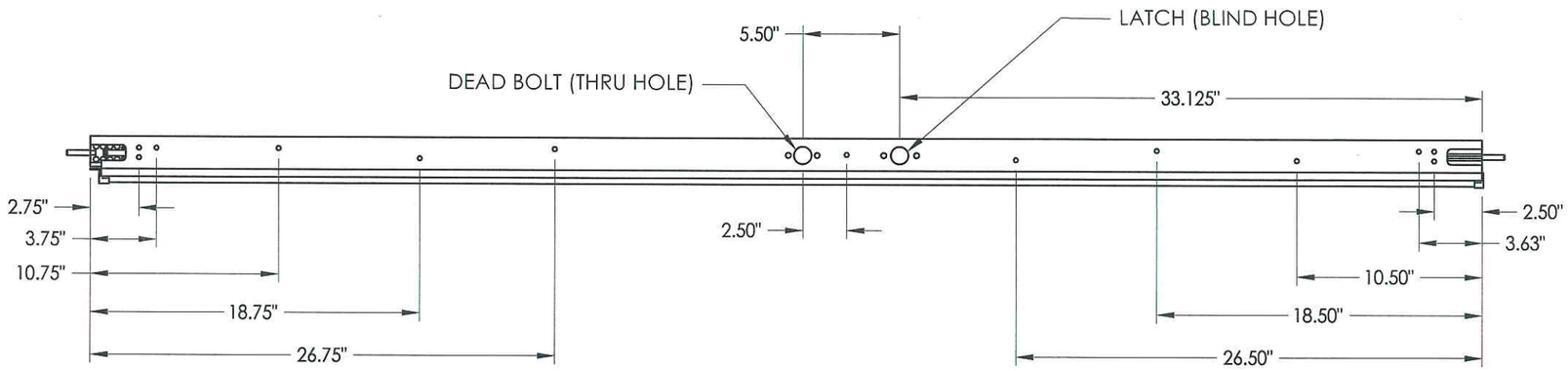

TOP

BOTTOM

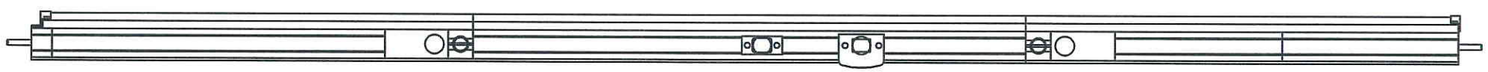

A-A

6'8 ALUMINUM ASTRAGAL ASSEMBLY
By Endura Products

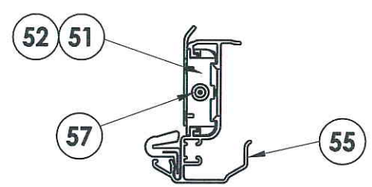

VIEW A-A
Aluminum Astragal Assembly

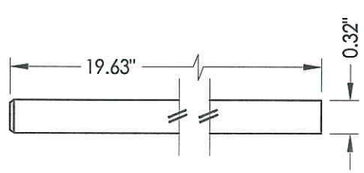

57 **SLIDE BOLT ROD**
MATL: Steel

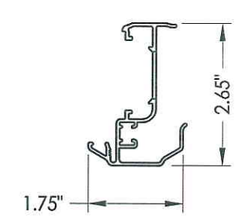

55 **ALUMINUM ASTRAGAL**
By Endura Products

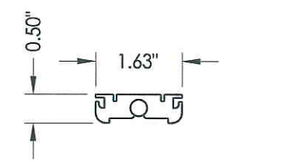

52 **TOP BOLT RETAINER**
MATL: 9-3/4" Long Aluminum

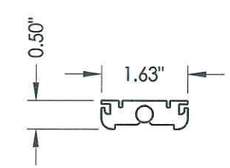

51 **TOP BOLT RETAINER**
MATL: 4-3/4" Long HDPE

STATE OF TEXAS
LYNDON F. SCHMIDT
104123
LICENSED PROFESSIONAL ENGINEER
1-6-10

Documents Prepared By: Lyndon F. Schmidt, P.E.
TEXAS P.E. #104123
RW BUILDING CONSULTANTS, INC.
P.O. Box 230 Valrico FL. 33595
Phone No.: 813.659.9197
TEXAS BOARD OF PROFESSIONAL ENGINEERS
CERTIFICATE OF REGISTRATION # F-11852

PRODUCT: TRINITY GLASS INT'L PREMIUM LIPLITE FIBERGLASS

PART OR ASSEMBLY: ENDURA ASTRAGAL DETAILS

REVISIONS

NO.	DATE		BY
2	7/23/09	TDI PRODUCT EVALUATION UPDATE	AL
1	6/28/06	REVISED LOCKSET NOMENCLATURE	EW

DATE: 8/26/05
SCALE: N.T.S.
DWG. BY: EW
CHK. BY: LFS
DRAWING NO.: TX-592
SHEET 7 OF 11

© 2009 R.W. BUILDING CONSULTANTS INC.

R:\A - Projects\Project Folders\Proj 1101 - 1200\pf1122\D. RWBC Drawings\TX-592\TX-592.dwg, 7

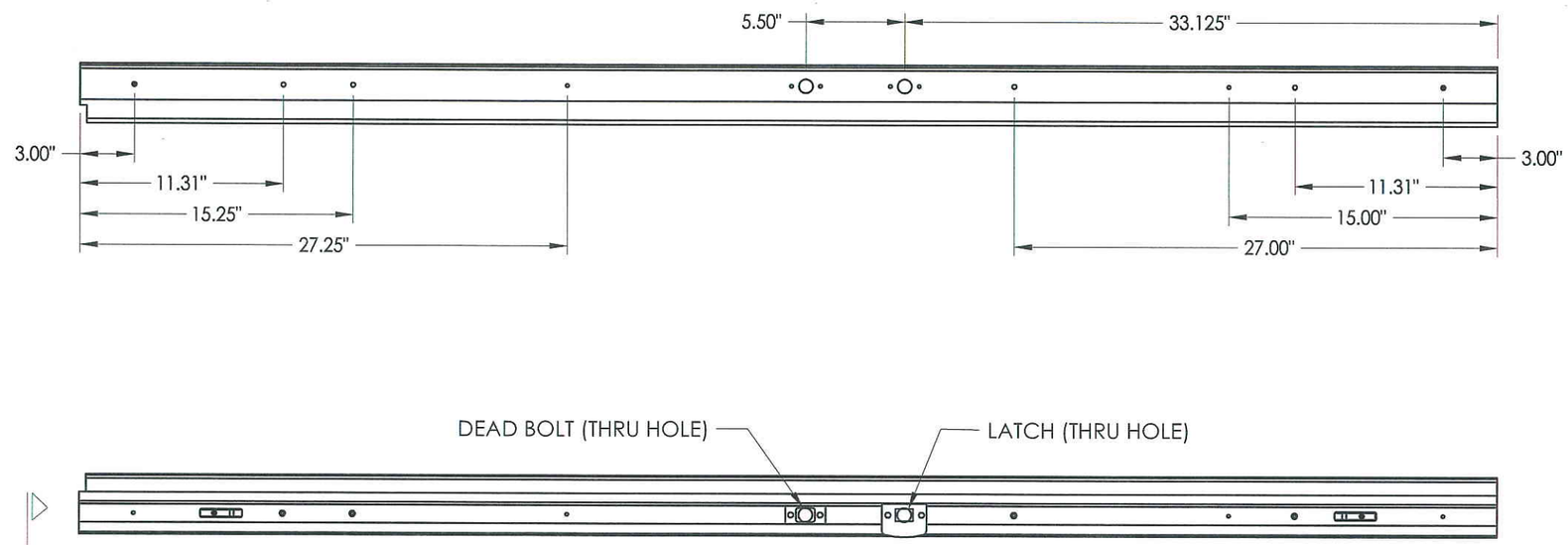

6'8 ALUMINUM ASTRAGAL ASSEMBLY
By Trinity

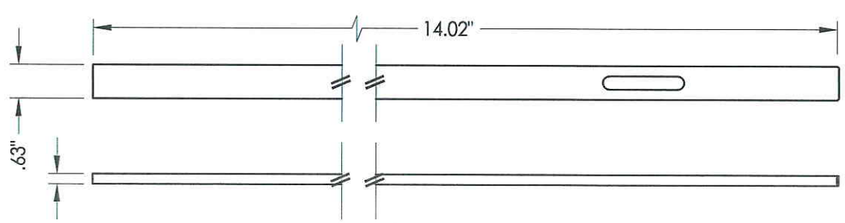

50 FLUSHBOLT BAR
MATL: Steel

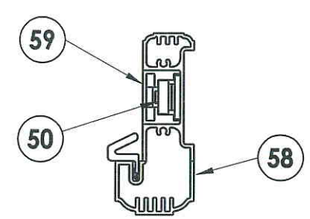

VIEW B-B
Aluminum Astragal Assembly

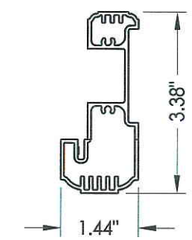

58 TRC ALUMINUM ASTRAGAL
By Trinity

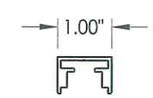

59 TRC ASTRAGAL CHANNEL
By Trinity

STATE OF TEXAS
LYNDON F. SCHMIDT
104123
LICENSED
PROFESSIONAL ENGINEER
1-6-10

Documents Prepared By: Lyndon F. Schmidt, P.E.
TEXAS P.E. #104123

RW BUILDING CONSULTANTS, INC.
P.O. Box 230 Valrico FL. 33595
Phone No.: 813.659.9197

TEXAS BOARD OF PROFESSIONAL ENGINEERS
CERTIFICATE OF REGISTRATION # F-11852

PRODUCT: TRINITY GLASS INT'L PREMIUM LIPLITE FIBERGLASS

PART OR ASSEMBLY: TRC ASTRAGAL DETAILS

NO.	DATE	REVISIONS	BY
2	7/23/09	TDI PRODUCT EVALUATION UPDATE	AL
1	6/28/06	REVISED LOCKSET NOMENCLATURE	EW

DATE: 8/26/05
SCALE: N.T.S.
DWG. BY: EW
CHK. BY: LFS
DRAWING NO.: TX-592
SHEET 8 OF 11

© 2009 R.W. BUILDING CONSULTANTS INC.

R:\A - Projects\Project Folders\Proj 1101 - 1200\pf1122\D. RWBC Drawings\TX-592\TX-592.dwg, 8

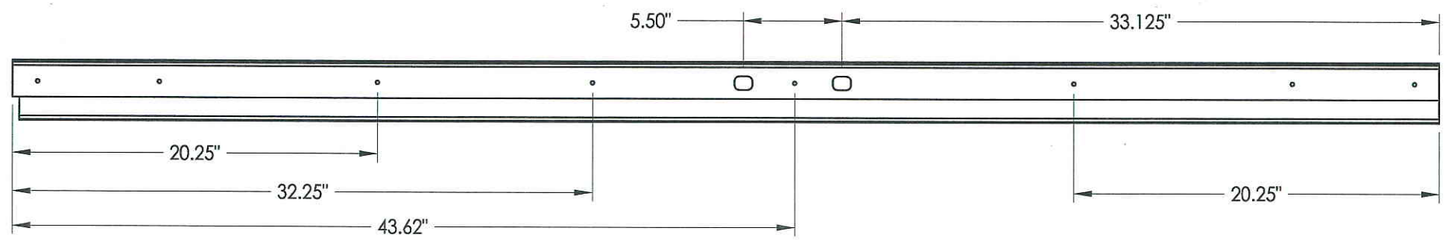

TOP

BOTTOM

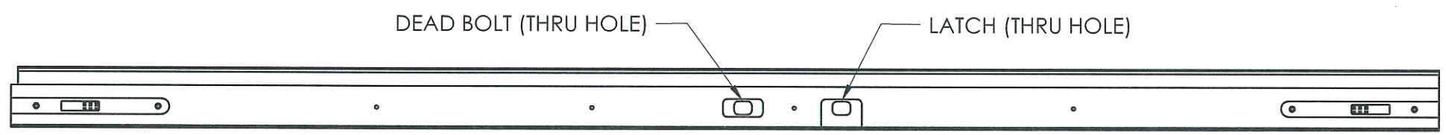

6'8 PVC ASTRAGAL ASSEMBLY
By Trinity

C-C

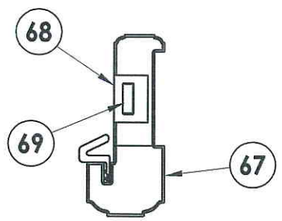

VIEW C-C
PVC ASTRAGAL ASSEMBLY

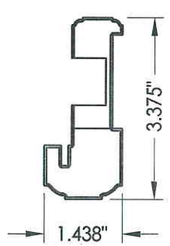

67 **PVC ASTRAGAL**
BY Trinity

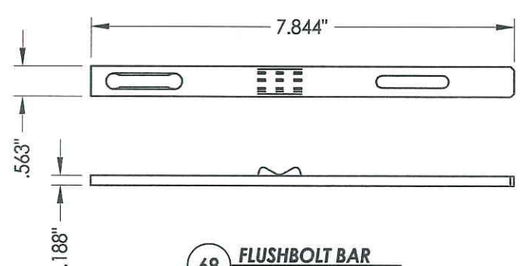

69 **FLUSHBOLT BAR**
MATL: DIE CAST ZINC

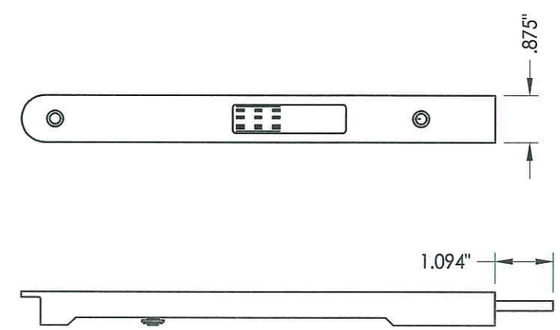

68 **FLUSHBOLT**
MATL: 8.75" DIE CAST ZINC

STATE OF TEXAS
LYNDON F. SCHMIDT
104123
LICENSED
PROFESSIONAL ENGINEER
1-6-10

Documents Prepared By: Lyndon F. Schmidt, P.E.
TEXAS P.E. #104123

RW BUILDING CONSULTANTS, INC.
P.O. Box 230 Valrico FL. 33595
Phone No.: 813.659.9197

TEXAS BOARD OF PROFESSIONAL ENGINEERS
CERTIFICATE OF REGISTRATION # F-11852

PRODUCT: TRINITY GLASS INT'L PREMIUM LIPLITE FIBERGLASS

PART OR ASSEMBLY: PVC ASTRAGAL DETAILS

REVISIONS

NO.	DATE		BY
2	7/23/09	TDI PRODUCT EVALUATION UPDATE	AL
1	6/28/06	REVISED LOCKSET NOMENCLATURE	EW

DATE: 8/26/05
SCALE: N.T.S.
DWG. BY: EW
CHK. BY: LFS
DRAWING NO.: TX-592
SHEET 9 OF 11

© 2009 R.W. BUILDING CONSULTANTS INC.

R:\A - Projects\Project Folders\Proj 1101 - 1200\pf1122\D. RWBC Drawings\TX-592\TX-592.dwg, 9

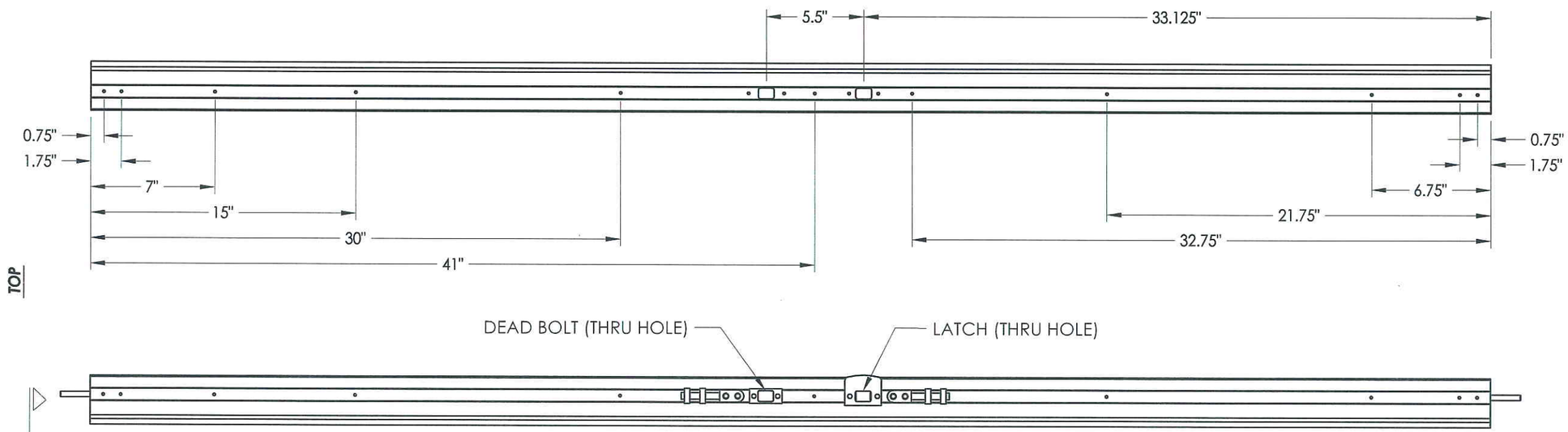

6'8 ALUMINUM ASTRAGAL ASSEMBLY
By Columbia

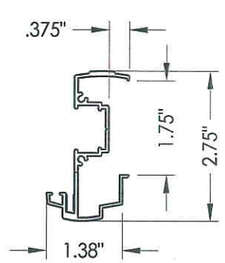

80 ALUMINUM ASTRAGAL
BY Columbia

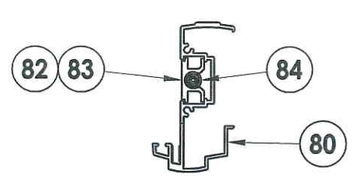

VIEW D-D
Aluminum Astragal Assembly

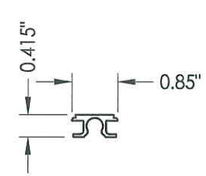

82 83 FLUSHBOLT RETAINER
Top / bottom
Aluminum 6063-T5

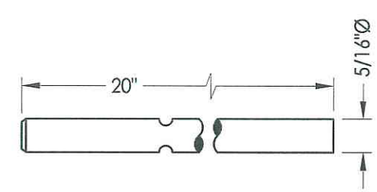

84 FLUSHBOLT ROD
Steel

STATE OF TEXAS
LYNDON F. SCHMIDT
104123
LICENSED
PROFESSIONAL ENGINEER
1-6-10

Documents Prepared By: Lyndon F. Schmidt, P.E.
TEXAS P.E. #104123

RW BUILDING CONSULTANTS, INC.
P.O. Box 230 Valrico FL. 33595
Phone No.: 813.659.9197

TEXAS BOARD OF PROFESSIONAL ENGINEERS
CERTIFICATE OF REGISTRATION # F-11852

PRODUCT: TRINITY GLASS INT'L PREMIUM LIPLITE FIBERGLASS

PART OR ASSEMBLY: COLUMBIA ASTRAGAL DETAILS

NO.	DATE	REVISIONS	BY
2	7/23/09	TDI PRODUCT EVALUATION UPDATE	AL
1	6/28/06	REVISED LOCKSET NOMENCLATURE	EW

DATE: 8/26/05
SCALE: N.T.S.
DWG. BY: EW
CHK. BY: LFS
DRAWING NO.: TX-592
SHEET 10 OF 11

© 2009 R.W. BUILDING CONSULTANTS INC.

R:\A - Projects\Project Folders\Proj 1101 - 1200\pf1122\D. RWBC Drawings\TX-592\TX-592.dwg, 10

CONCRETE ANCHOR NOTES:

1. Substitution of equal concrete anchors from a different supplier may have different edge distance and center distance requirements.
2. Concrete anchor locations at the corners may be adjusted to maintain the min. edge distance to mortar joints. If concrete anchor locations noted as "MAX. ON CENTER" must be adjusted to maintain the min. edge distance to mortar joints, additional concrete anchors may be required to ensure the "MAX. ON CENTER" dimensions are not exceeded.
3. Concrete anchor table:

ANCHOR TYPE	ANCHOR SIZE	MIN. EMBEDMENT	MIN. CLEARANCE TO MASONRY EDGE	MIN. CLEARANCE TO ADJACENT ANCHOR
ITW	3/16"	1-3/4"	2-5/8"	2-1/4"
ELCO	3/16"	1-3/4"	1"	3"

STATE OF TEXAS
LYNDON F. SCHMIDT
104123
LICENSED PROFESSIONAL ENGINEER
1-6-10

BILL OF MATERIALS

ITEM	DESCRIPTION	MATERIAL	ITEM	DESCRIPTION	MATERIAL
A	2X HEADER FRAMING SG >= 0.42	WOOD	31	LVL LOCK BLOCK	POPLAR
B	2X FRAMING SG >= 0.42	WOOD	32	HINGE STILE - SG >= 0.42	LVL/PVC
G	MAX. 1/4" SHIM SPACE	WOOD	33	TOP RAIL - POPLAR LVL & WPC COMBINATION	POPLAR/WPC
I	3/16" X 2-1/4" ITW PFH CONCRETE SCREW	WOOD	34	BOTTOM RAIL - POPLAR LVL & WPC COMBINATION	POPLAR/WPC
J	#10 X 3" PFH WS	STEEL	39	FIBERGLASS SKIN 0.079" MIN. THICKNESS (Fy = 5,203 PSI MIN.)	FIBERGLASS
K	#9 X 2" PFH WS	STEEL	40	#8 X 1-1/8" SELF THREADING SCREW	STEEL
L	#8 X 2-1/2" PFH WS	STEEL	42	ALUMINUM & BUTYL SPACER SYSTEM	ALUM./BUTYL
P	3/16" X 2-3/4" ELCO OR ITW PFH CONCRETE SCREW	STEEL	44	HOT MELT SEALANT / SILICONE	-
Q	3/16" X 3-1/4" ITW CONCRETE SCREW	STEEL	45	LITE FRAME	PC/ASA
3	HINGE JAMB - FINGER-JOINT PINE - SG >= 0.42	WOOD	46	FOAM CORE	POLYURETHANE
4	HEAD - FINGER-JOINT PINE - SG >= 0.42	WOOD	50	FLUSHBOLT BAR	STEEL
5	INSWING THRESHOLD ALUMINUM W/ COMPOSITE SUBSTRATE	ALUMINUM	51	4-3/4" LENGTH TOP BOLT RETAINER	HDPE
6	DOOR BOTTOM SWEEP	PVC	52	9-3/4" LENGTH TOP BOLT RETAINER	ALUMINUM
7	DOOR PANEL - SEE DOOR PANEL DETAIL SHEET FOR CONSTRUCTION DETAILS	-	53	#8 X 1-3/4" PFH SMS	STEEL
8	#6 X 1-1/4" PFH DRYWALL SCREW	STEEL	54	ASTRAGAL STRIKE @ HEAD	STEEL
12	WEATHER STRIP QEBD650 Q-LON	-	55	ASTRAGAL BY ENDURA PRODUCTS	ALUMINUM
18	3.983" X 4.0" HINGE MIN 0.098" THICK	STEEL	56	ASTRAGAL STRIKE @ SILL	STEEL
19	SILLKEY	PC/ASA	57	SLIDE BOLT ROD	STEEL
21	LOCK (SEE LOCK & DEADBOLT RATINGS CHART)	STEEL	58	TRC ASTRAGAL BY TRINITY	ALUMINUM
22	DEADBOLT (SEE LOCK & DEADBOLT RATINGS CHART)	STEEL	59	TRC ASTRAGAL CHANNEL BY TRINITY	ALUMINUM
23	STRIKE PLATE	STEEL	67	PVC ASTRAGAL BY TRINITY	PVC
23A	DEADBOLT PLATE	STEEL	68	FLUSHBOLT	DIE CAST ZINC
24	#9 X 5/8" PFH SCREW	STEEL	69	FLUSHBOLT BAR	DIE CAST ZINC
25	OUTSWING HIGH-DAM THRESHOLD ALUMINUM W/ COMPOSITE SUBSTRATE	ALUM./ COMP.	80	EXTRUDED ALUMINUM ASTRAGAL BY COLUMBIA ALUM. PROD.	ALUMINUM
26	#9 X 1" PFH SCREW	STEEL	81	#8 X 2-1/2" PFH WS	STEEL
27	OUTSWING THRESHOLD ALUMINUM W/ COMPOSITE SUBSTRATE	ALUM./ COMP.	82	TOP FLUSHBOLT RETAINER 6063-T5	ALUM. /STEEL
30	LATCH STILE - SG >= 0.42	LVL/PVC	83	BOTTOM FLUSHBOLT RETAINER 6063-T5	ALUM. /STEEL
			84	5/16"Ø X 20" LONG FLUSHBOLT ROD	STEEL

Documents Prepared By: Lyndon F. Schmidt, P.E.
TEXAS P.E. #104123
RW BUILDING CONSULTANTS, INC.
P.O. Box 230 Valrico FL. 33595
Phone No.: 813.659.9197
TEXAS BOARD OF PROFESSIONAL ENGINEERS
CERTIFICATE OF REGISTRATION # F-11852

PRODUCT: TRINITY GLASS INT'L PREMIUM LIPLITE FIBERGLASS

PART OR ASSEMBLY: BILL OF MATERIALS

REVISIONS

NO.	DATE		BY
2	7/23/09	TDI PRODUCT EVALUATION UPDATE	AL
1	6/28/06	REVISED LOCKSET NOMENCLATURE	EW

DATE: 8/26/05
SCALE: N.T.S.
DWG. BY: EW
CHK. BY: LFS
DRAWING NO.: TX-592
SHEET 11 OF 11

© 2009 R.W. BUILDING CONSULTANTS INC.

R:\A - Projects\Project Folders\Proj 1101 - 1200\pf1122\D. RWBC Drawings\TX-592\TX-592.dwg, 11