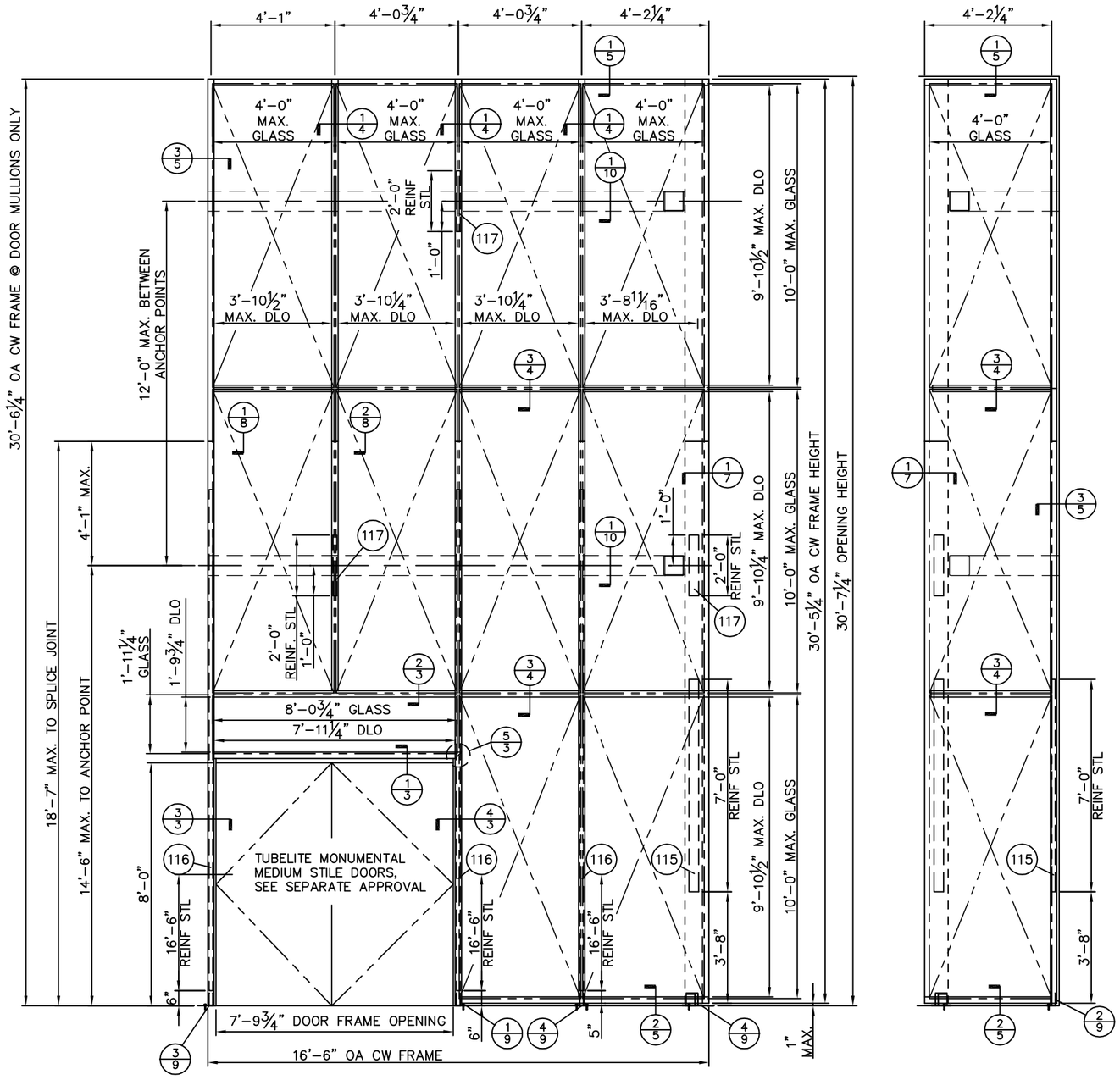

E1/1 TWIN-SPAN ELEVATION
SEE DP CHART, TABLE A

GENERAL NOTES

1. THIS CURTAIN WALL SYSTEM HAS BEEN TESTED TO ASTM E283, ASTM E330, ASTM E331, AAMA 501.1/501.4/501.5, AND MEETS THE REQUIREMENTS OF THE 2006 INTERNATIONAL BUILDING CODE AND INTERNATIONAL RESIDENTIAL CODE, WITH 2006 TEXAS REVISIONS EFFECTIVE JANUARY 1, 2008.
2. THE INSTALLED CURTAIN WALL SYSTEM SHALL BE FABRICATED, GLAZED, AND ANCHORED IN ACCORDANCE WITH THIS DRAWING AS WELL AS THE APPLICABLE TEST REPORTS. A TEXAS LICENSED ENGINEER FAMILIAR WITH CURTAIN WALL DESIGN SHALL APPROVE SHOP DRAWINGS FOR EACH PROJECT, AND THIS ENGINEER OF RECORD SHALL TAKE FULL RESPONSIBILITY FOR THE INSTALLED SYSTEM DESIGN AS A WHOLE.
3. THIS DRAWING INDICATES VARIOUS APPROVED GLAZING METHODS AND FRAMING TYPES WHICH MAY BE USED SINGLY OR IN COMBINATION FOR EACH PROJECT. ANY NUMBER OF PANELS MAY BE USED HORIZONTALLY PROVIDED THE MAXIMUM DLO SIZES AS INDICATED IN THIS DRAWING ARE NOT EXCEEDED.
4. THIS PRODUCT IS NON-IMPACT AND REQUIRES THE USE OF APPROVED IMPACT PROTECTIVE DEVICES IN WINDBORNE DEBRIS AREAS.
5. REQUIRED DESIGN PRESSURES SHALL BE DETERMINED FOR EACH PROJECT IN ACCORDANCE WITH APPLICABLE CODE REQUIREMENTS AND GOVERNING WIND SPEEDS FOR THE PROJECT LOCATION.
6. THE ALLOWABLE DESIGN PRESSURE RATINGS IN THIS DRAWING ARE AS LIMITED BY ASTM E-1300-04 GLASS TABLES, TESTING, AND CALCULATIONS.
7. DISSIMILAR MATERIALS THAT COME INTO CONTACT, INCLUDING BUT NOT LIMITED TO FASTENERS IN CONTACT WITH PRESSURE TREATED WOOD SUBSTRATES OR ALUMINUM, SHALL BE COATED OR OTHERWISE PROTECTED TO PREVENT CORROSION OR GALVANIC REACTIONS.
8. SEALING AND FLASHING STRATEGIES FOR OVERALL WATER INFILTRATION RESISTANCE OF THE INSTALLED PRODUCT ARE NOT WITHIN THE SCOPE OF THIS APPROVAL AND SHALL BE THE RESPONSIBILITY OF OTHERS.
9. THE 4/3 ALLOWABLE STRESS INCREASE HAS NOT BEEN USED IN THE ANCHOR ANALYSIS FOR THIS SYSTEM. THE 1.6 Cd FACTOR WAS USED IN THE ANALYSIS OF WOOD SUBSTRATE.
10. STRUCTURAL INTEGRITY OF SUBSTRATE MATERIALS TO RECEIVE THE LOADS FROM THIS PRODUCT, TO BE VERIFIED BY OTHERS OR AS APPROVED BY THE AUTHORITY HAVING JURISDICTION.
11. THIS PRODUCT SHALL BE INSTALLED USING ONE OF THE APPROVED FASTENING OR WELDING METHODS INDICATED IN THIS DRAWING, AS APPROPRIATE FOR THE SUBSTRATE TYPE. WELD SIZES AND LOCATIONS FOR INTERMEDIATE ANCHORS SHALL BE AS INDICATED IN THE DETAILS FOR EACH CLIP TYPE, AND FOR U, F, AND T-ANCHORS THE ANCHOR SIZE, EMBEDMENT, EDGE DISTANCE, AND PATTERN WITHIN THE CLIP SHALL BE IN ACCORDANCE WITH TABLE D, SHEET 2, AND APPLICABLE DETAILS.
12. MINIMUM ANCHOR EMBEDMENTS LISTED IN THIS DRAWING SHALL BE BEYOND WALL DRESSING OR STUCCO AND FULLY INTO SUBSTRATE.
13. SUBSTRATES SHALL MEET THE MINIMUM STRENGTH REQUIREMENTS AS SHOWN IN TABLE D, SHEET 2. CONCRETE SUBSTRATES SHALL NOT BE CRACKED.

TABLE A. ELEV. E1/1 DESIGN PRESSURE CHART (PSF)

		GLASS HEIGHT
		120" & Under
MAX. GLASS WIDTH	**45" & Under**	+/-63.3
	48"	+/-60

Lucas A. Turner
2016-09-28
15:09-04:00

STATE OF TEXAS
LUCAS A. TURNER
115094
LICENSED
PROFESSIONAL ENGINEER

9/28/2016
LUCAS A. TURNER, P.E.
TX PE # 115094
1239 JABARA AVE.
NORTH PORT, FL 34288
PH. 941-380-1574

TABLE OF CONTENTS:

SHTS	CONTENT
1	NOTES, TWIN-SPAN ELEVATION
2	SINGLE-SPAN ELEV., GLAZING, ANCHORS
3-7	SECTION DETAILS
8	SPLICE JOINT
9-10	ANCHOR DETAILS
11-12	ASSEMBLY DETAILS
13	PART DRAWINGS
14	PART DWGS, BILL OF MATERIALS

TUBELITE
CW 400 SSG NON-IMPACT CURTAIN WALL SYSTEM

TUBELITE®
DEPENDABLE
LEADERS IN ECO-EFFICIENT STOREFRONT, CURTAINWALL AND ENTRANCE SYSTEMS
3056 WALKER RIDGE DRIVE N.W.
WALKER, MICHIGAN 49544
PH: 800.866.2227
FX: 616.301.0008
WEB SITE: WWW.TUBELITEINC.COM

REVISION HISTORY:

REV	DATE	DRAWN	DESCRIPTION
O	9.28.16	LT	ORIGINAL RELEASE

DATE: 9.28.16
DRAWING NUMBER: TDI-400-SSG-NI
DRAWN:
FINAL REVIEW:
SCALE: N.T.S.
REVISION: O
SHEET NAME: NOTES, ELEVATION
SHEET: 1 OF 14

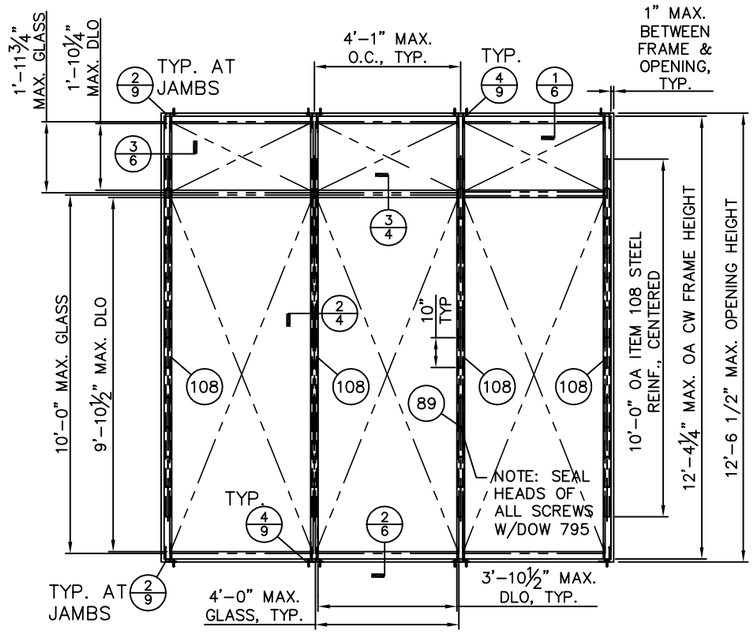

E3/2 SINGLE-SPAN ELEVATION
SEE DP CHART, TABLE C

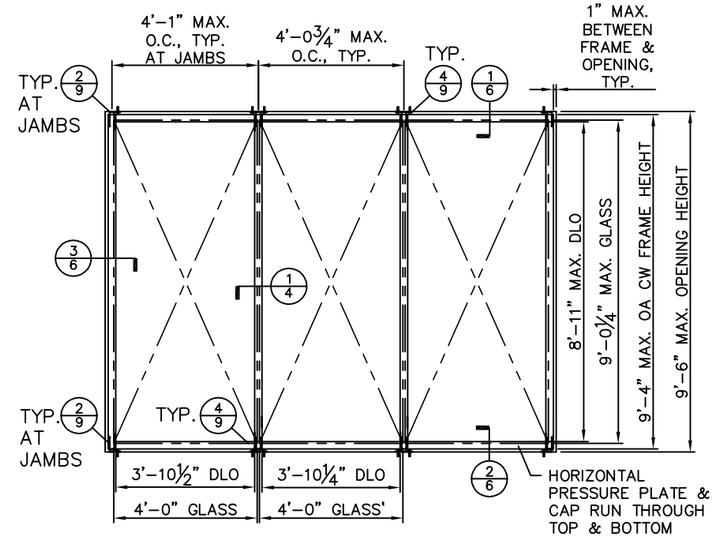

E2/2 SINGLE-SPAN ELEVATION
SEE DP CHART, TABLE B

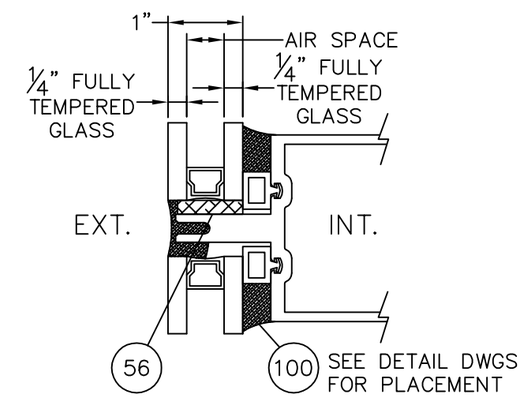

TYP. GLAZING DETAIL

TABLE C. ELEV. E3/2 DESIGN PRESSURE CHART (PSF)

		FRAME HEIGHT
		148-1/4" & Under
MAX. GLASS WIDTH	**32" & Under**	+72/-80
	36"	+72/-78
	42"	+/-68.5
	48"	+/-60

TABLE B. ELEV. E2/2 DESIGN PRESSURE CHART (PSF)

		FRAME HEIGHT
		112" & Under
MAX. GLASS WIDTH	**30" & Under**	+/-90
	36"	+/-75.8
	42"	+/-65.2
	48"	+/-57.1

TABLE D. QUALIFIED ANCHOR INFORMATION

ID	SUBSTRATE	ANCHOR	MIN. EMBEDMENT	MIN. EDGE DISTANCE
A	SOLID UNCRACKED CONCRETE (3000 PSI MIN)	3/8" HILTI KWIK BOLT 3 CARBON OR STAINLESS STEEL, MAY BE USED ALL LOCATIONS, REQUIRED AT DET. 1/9 FOR CONCRETE INSTALL	2 1/2"	3"
B	SOLID UNCRACKED CONCRETE (3000 PSI MIN)	1/2" ITW RED HEAD LDT CARBON OR STAINLESS STEEL, MAY BE USED ALL LOCATIONS EXCEPT DET. 1/9	3 1/2"	3"
C	SOUTHERN PINE WOOD (G=0.55 MIN)	3/8" GRADE 5 LAG SCREW, MAY BE USED ALL LOCATIONS EXCEPT DET. 1/9	2 1/2"	1 1/2"
D	SOUTHERN PINE WOOD (G=0.55 MIN)	1/2" GRADE 5 LAG SCREW, MAY BE USED ALL LOCATIONS, REQUIRED AT DET. 1/9 FOR WOOD INSTALL	3"	2"
E	1/4" ALUM. 6063-T5 MIN. OR 1/4" STEEL 36 KSI MIN.	3/8-16 GRADE 5 SHEET METAL SCREW	SEE NOTE	3/4"

NOTE: ANCHORS THROUGH METAL SHALL BE OF SUFFICIENT LENGTH TO PROVIDE THREAD ENGAGEMENT THROUGH THE FULL METAL THICKNESS

STATE OF TEXAS
LUCAS A. TURNER
115094
LICENSED
PROFESSIONAL ENGINEER

9/28/2016
LUCAS A. TURNER, P.E.
TX PE # 115094
1239 JABARA AVE.
NORTH PORT, FL 34288
PH. 941-380-1574

TUBELITE
CW 400 SSG NON-IMPACT
CURTAIN WALL SYSTEM

TUBELITE®
DEPENDABLE
LEADERS IN ECO-EFFICIENT STOREFRONT, CURTAINWALL AND ENTRANCE SYSTEMS
3056 WALKER RIDGE DRIVE N.W.
WALKER, MICHIGAN 49544
PH: 800.866.2227
FX: 616.301.0008
WEB SITE: WWW.TUBELITEINC.COM

REVISION HISTORY:

REV	DATE	DRAWN	DESCRIPTION
O	9.28.16	LT	ORIGINAL RELEASE

DATE: 9.28.16
DRAWING NUMBER: TDI-400-SSG-NI
DRAWN:
FINAL REVIEW:
SCALE: N.T.S.
REVISION: O
SHEET NAME: ELEVATIONS, ANCHORAGE, GLAZING
SHEET: 2 OF 14

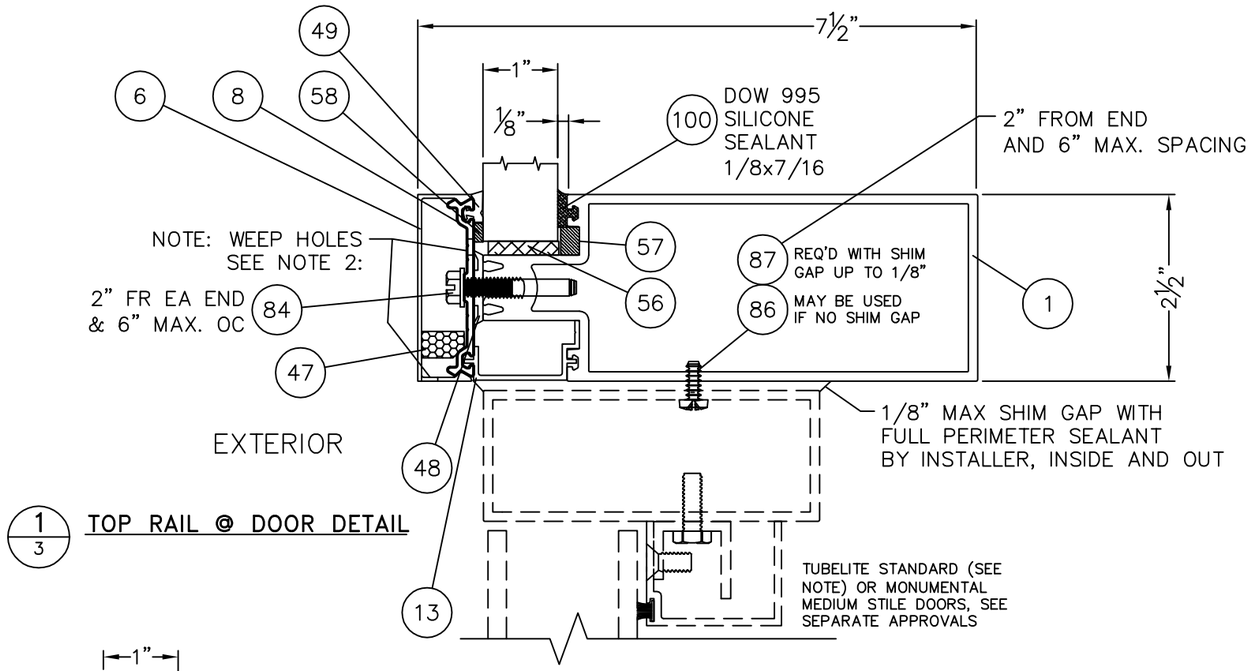

1/3 TOP RAIL @ DOOR DETAIL

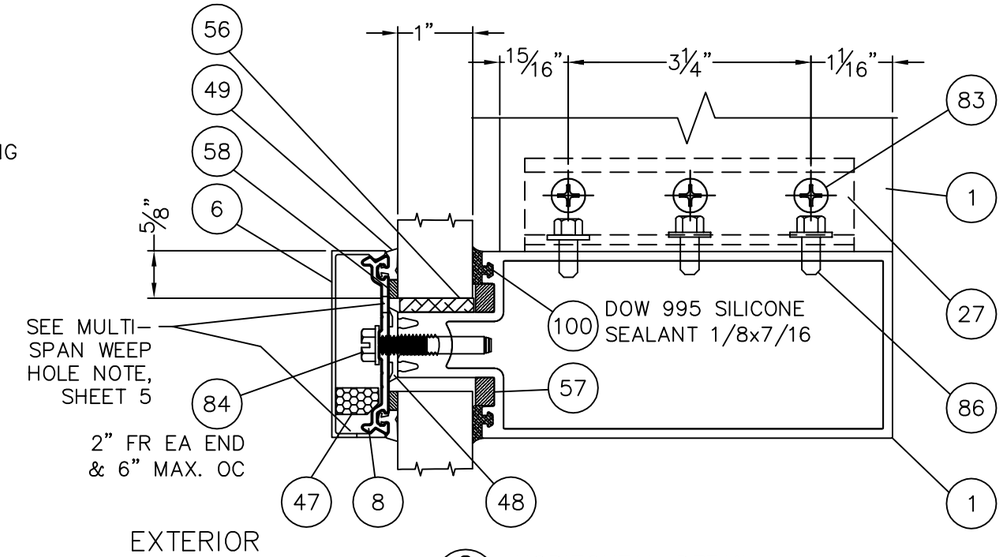

2/3 HORIZONTAL DETAIL
W/ VERTICAL TUBE ATTACHED ABOVE

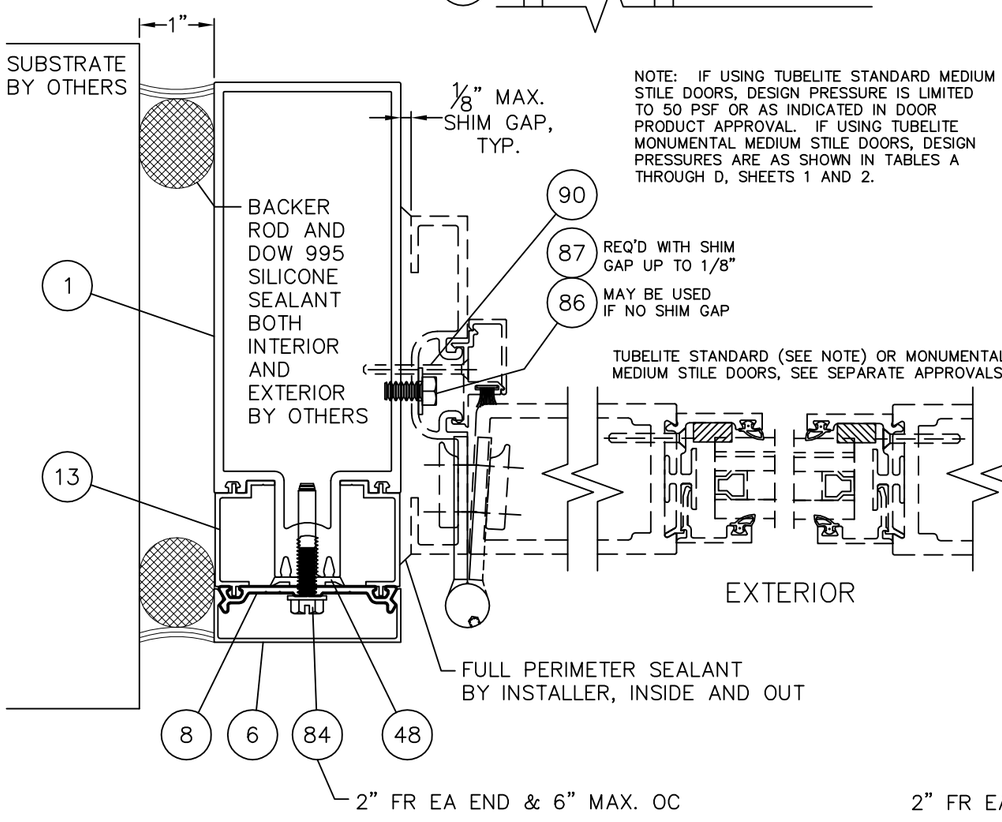

3/3 JAMB @ DOOR DETAIL

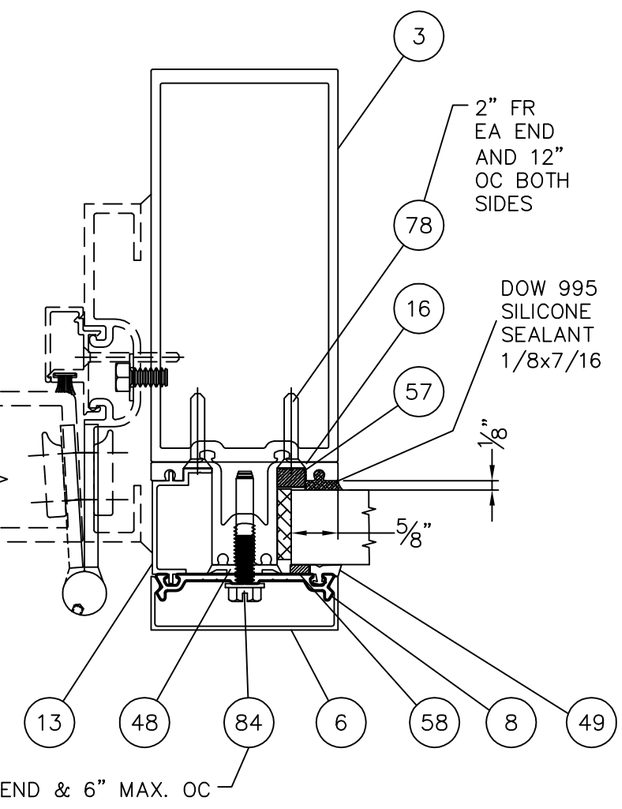

4/3 JAMB @ DOOR DETAIL

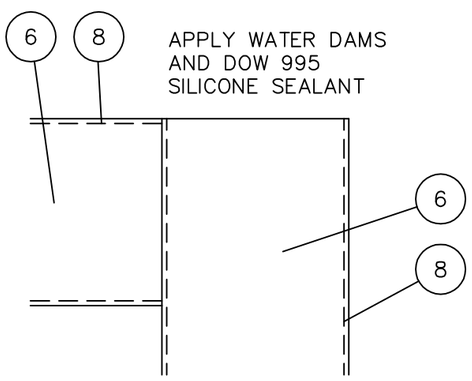

5/3 CAP INTERSECTION DETAIL

STATE OF TEXAS
LUCAS A. TURNER
115094
LICENSED
PROFESSIONAL ENGINEER

9/28/2016
LUCAS A. TURNER, P.E.
TX PE # 115094
1239 JABARA AVE.
NORTH PORT, FL 34288
PH. 941-380-1574

TUBELITE
CW 400 SSG NON-IMPACT CURTAIN WALL SYSTEM

TUBELITE® DEPENDABLE
LEADERS IN ECO-EFFICIENT STOREFRONT, CURTAINWALL AND ENTRANCE SYSTEMS
3056 WALKER RIDGE DRIVE N.W.
WALKER, MICHIGAN 49544
PH: 800.866.2227
FX: 616.301.0008
WEB SITE: WWW.TUBELITEINC.COM

REVISION HISTORY:

REV	DATE	DRAWN	DESCRIPTION
0	9.28.16	LT	ORIGINAL RELEASE

DATE: 9.28.16
DRAWING NUMBER: TDI-400-SSG-NI
DRAWN:
FINAL REVIEW:
SCALE: N.T.S.
REVISION: 0
SHEET NAME: DOOR SECTION DETAILS
SHEET: 3 OF 14

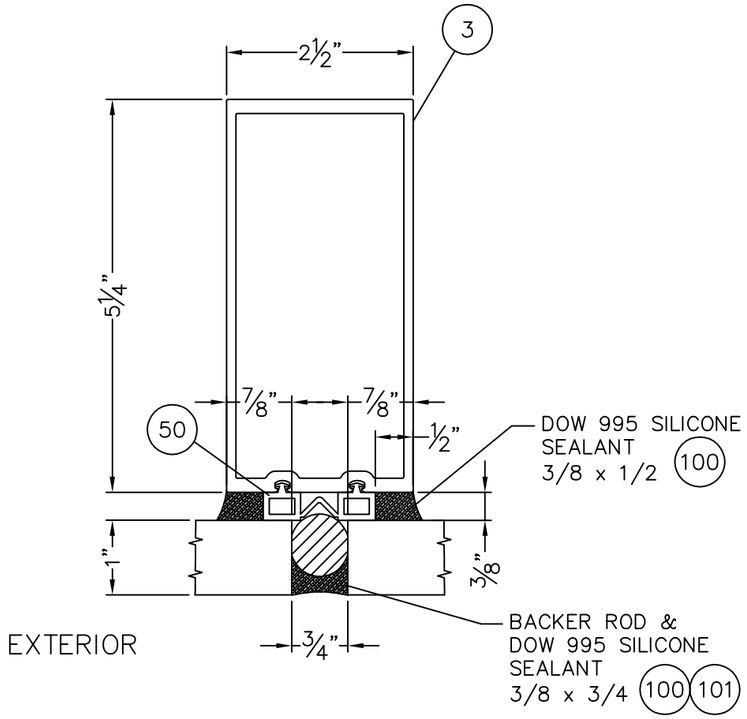

1/4 STRUCTURAL GLAZED VERTICAL DETAIL

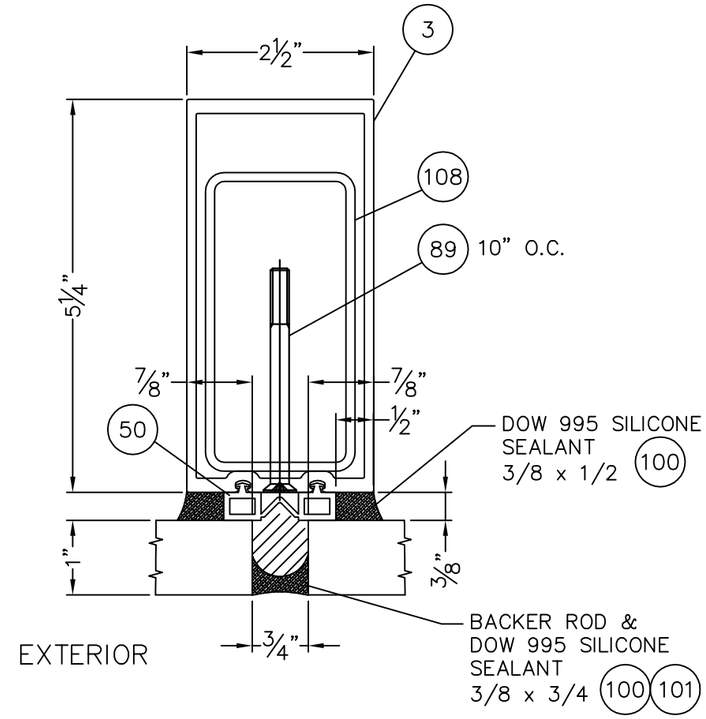

2/4 STRUCTURAL GLAZED VERTICAL DETAIL
WITH STEEL REINFORCEMENT

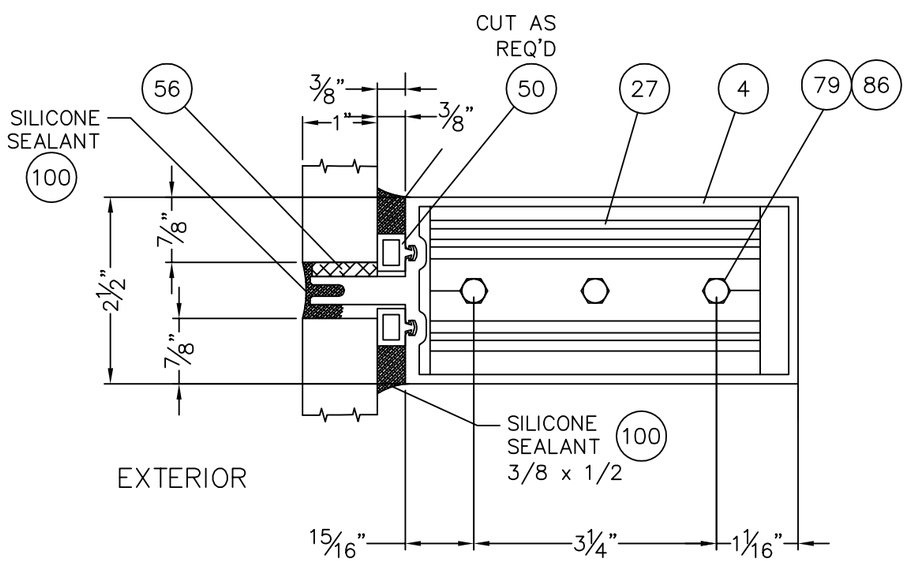

3/4 STRUCTURAL GLAZED HORIZONTAL DETAIL
1" OVER 1" GLASS

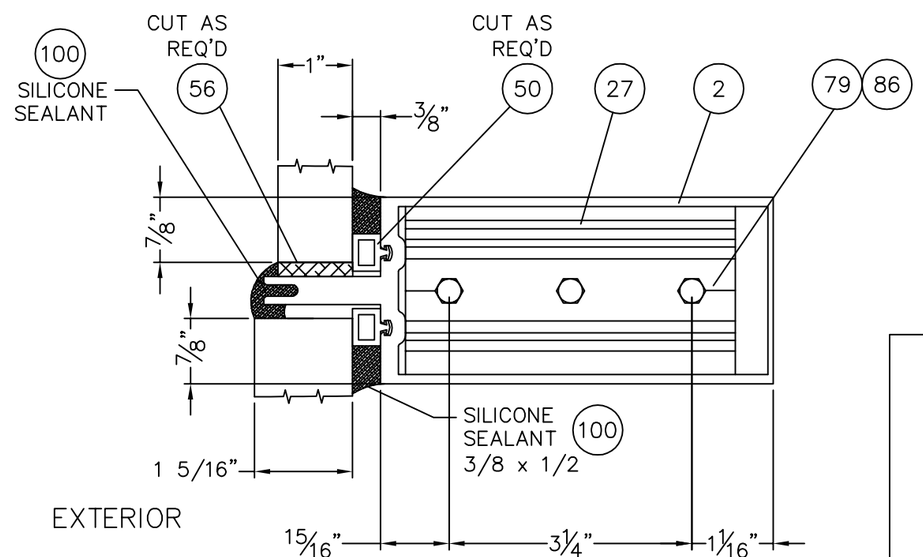

4/4 STRUCTURAL GLAZED HORIZONTAL DETAIL
1" OVER 1 5/16" (SEE SEPARATE APPROVAL) GLASS

STATE OF TEXAS
LUCAS A. TURNER
115094
LICENSED
PROFESSIONAL ENGINEER

IZ
9/28/2016
LUCAS A. TURNER, P.E.
TX PE # 115094
1239 JABARA AVE.
NORTH PORT, FL 34288
PH. 941-380-1574

TUBELITE
CW 400 SSG NON-IMPACT
CURTAIN WALL SYSTEM

TUBELITE®
DEPENDABLE
LEADERS IN ECO-EFFICIENT STOREFRONT, CURTAINWALL AND ENTRANCE SYSTEMS
3056 WALKER RIDGE DRIVE N.W.
WALKER, MICHIGAN 49544
PH: 800.866.2227
FX: 616.301.0008
WEB SITE: WWW.TUBELITEINC.COM

REVISION HISTORY:

REV	DATE	DRAWN	DESCRIPTION
0	9.28.16	LT	ORIGINAL RELEASE

DATE: 9.28.16
DRAWING NUMBER: TDI-400-SSG-NI
DRAWN:
FINAL REVIEW:
SCALE: N.T.S.
REVISION: 0
SHEET NAME: INTERMEDIATE SECTION DETAILS
SHEET: 4 OF 14

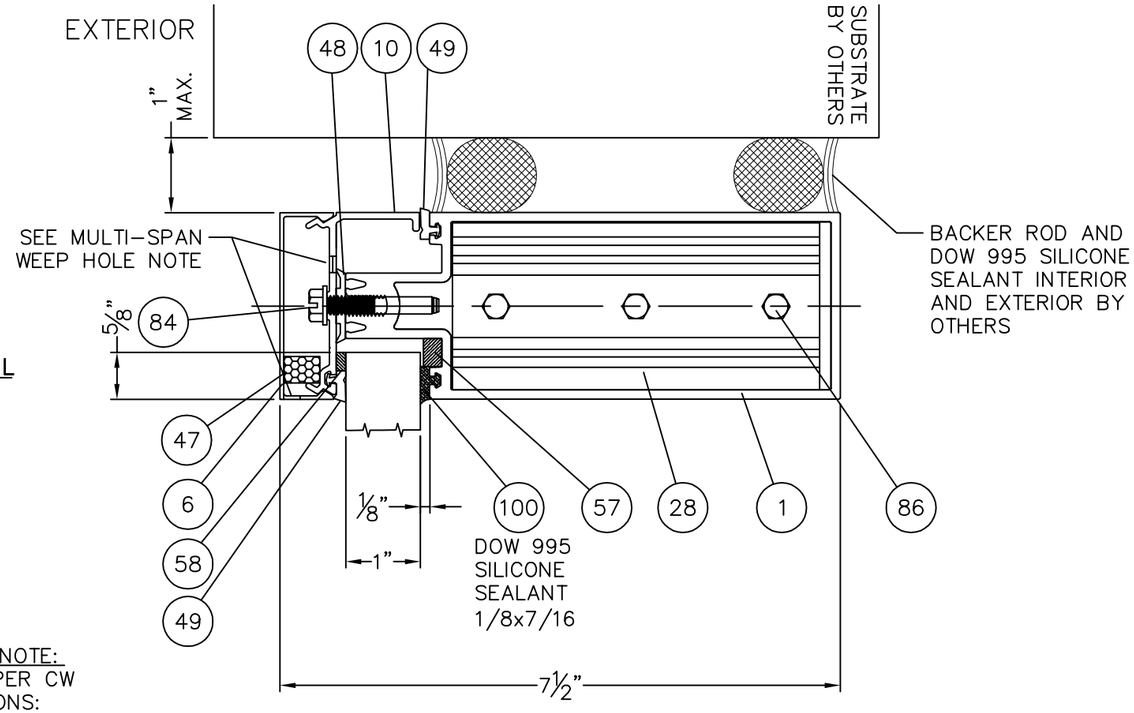

1/5 **HEAD DETAIL**
TWIN-SPAN

TWIN-SPAN WEEP HOLE NOTE:
WEEP HOLE LOCATIONS PER CW INSTALLATION INSTRUCTIONS:
PRESSURE PLATE – (3) 1/4" DIA. HOLES ONE MID BAY AND (1) HALF WAY BETWEEN 1/4 POINTS AND END OF PRESSURE PLATE. MIN 4" FROM EA END.
SNAP COVER – (2) 1/4" X 1/2" LONG SLOTS 1' MAX FROM EA END TO CENTER OF SLOT.

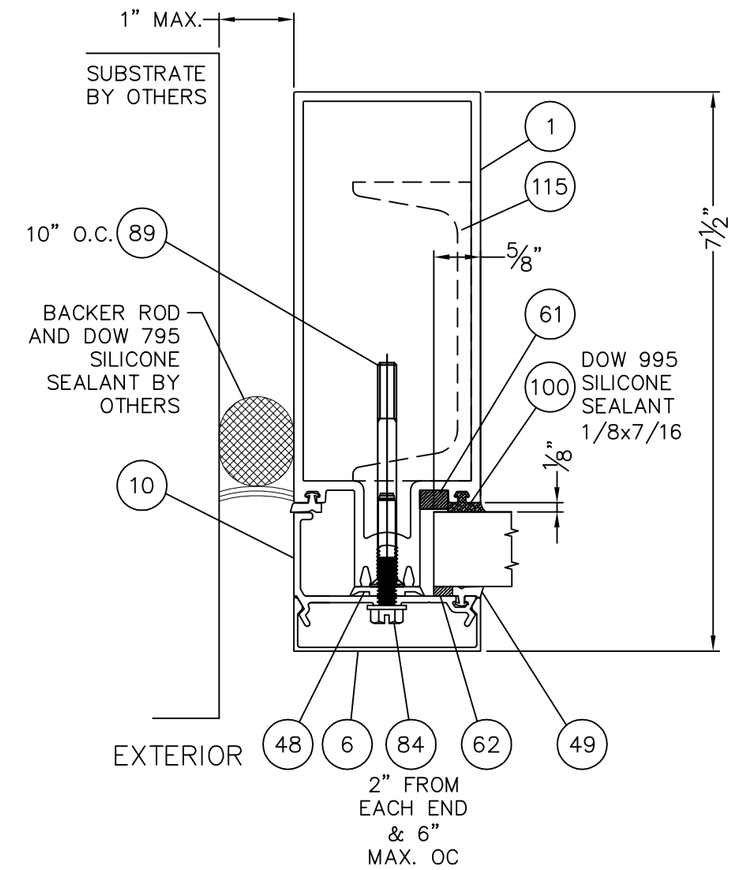

3/5 **JAMB DETAIL**
TWIN-SPAN

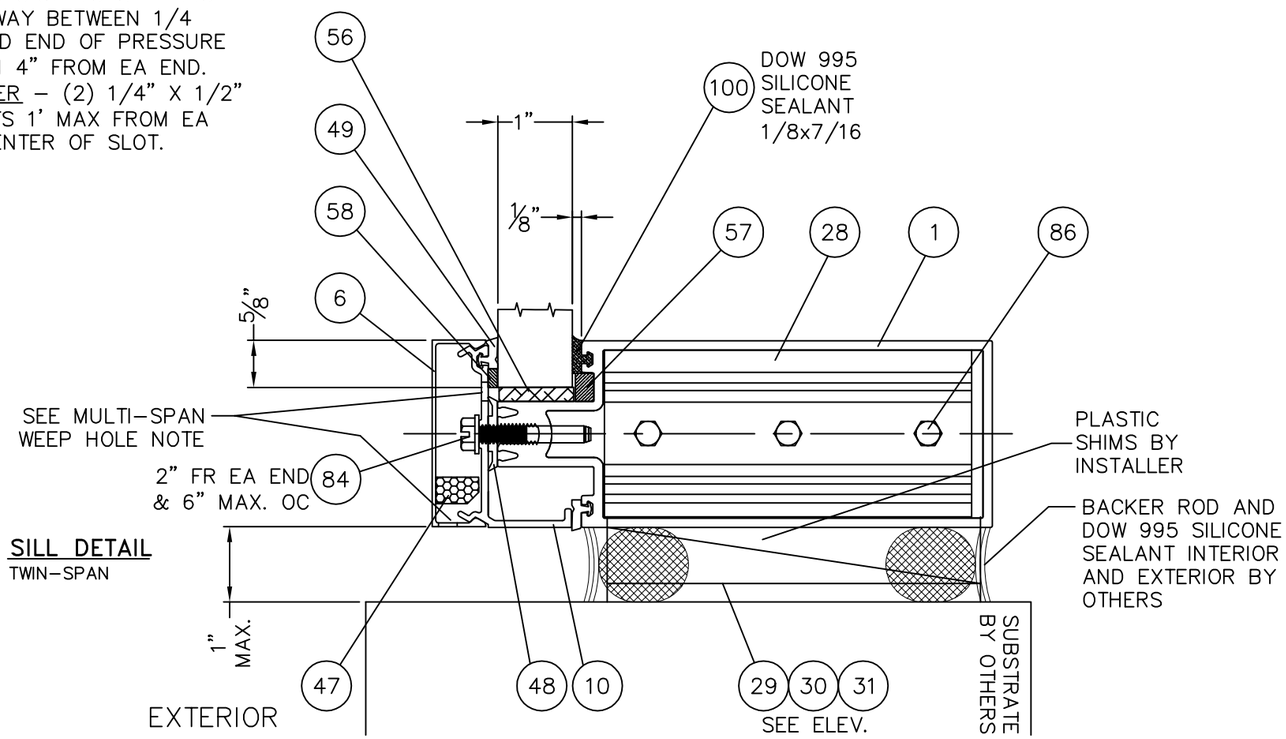

2/5 **SILL DETAIL**
TWIN-SPAN

STATE OF TEXAS
LUCAS A. TURNER
115094
LICENSED
PROFESSIONAL ENGINEER

9/28/2016
LUCAS A. TURNER, P.E.
TX PE # 115094
1239 JABARA AVE.
NORTH PORT, FL 34288
PH. 941-380-1574

TUBELITE
CW 400 SSG NON-IMPACT
CURTAIN WALL SYSTEM

TUBELITE®
DEPENDABLE
LEADERS IN ECO-EFFICIENT STOREFRONT, CURTAINWALL AND ENTRANCE SYSTEMS
3056 WALKER RIDGE DRIVE N.W.
WALKER, MICHIGAN 49544
PH: 800.866.2227
FX: 616.301.0008
WEB SITE: WWW.TUBELITEINC.COM

REVISION HISTORY:

REV	DATE	DRAWN	DESCRIPTION
O	9.28.16	LT	ORIGINAL RELEASE

DATE: 9.28.16
DRAWING NUMBER: TDI-400-SSG-NI
DRAWN:
FINAL REVIEW:
SCALE: N.T.S.
REVISION: O
SHEET NAME: TWIN-SPAN PERIMETER DETAILS
SHEET: 5 OF 14

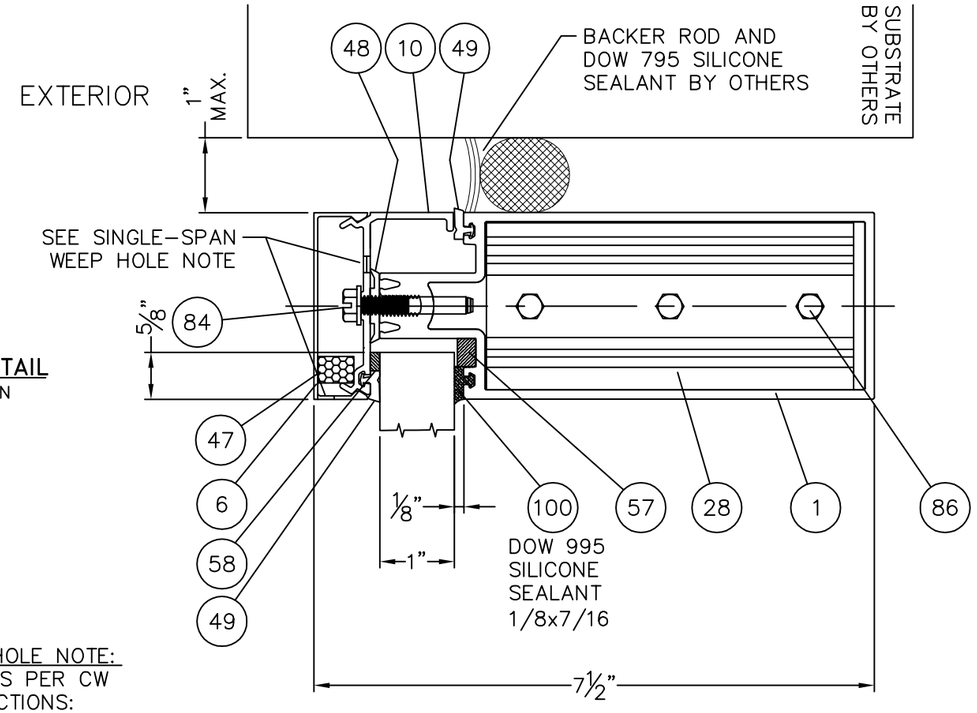

1/6 HEAD DETAIL
SINGLE-SPAN

SINGLE-SPAN WEEP HOLE NOTE:
WEEP HOLE LOCATIONS PER CW INSTALLATION INSTRUCTIONS:
PRESSURE PLATE – (3) 1/4" DIA. HOLES ONE MID BAY AND (1) HALF WAY BETWEEN 1/4 POINTS AND END OF PRESSURE PLATE. MIN 4" FROM EA END.
SNAP COVER – (2) 1/4" X 1" LONG SLOTS 1 3/16" MAX FROM EA END TO CENTER OF SLOT.

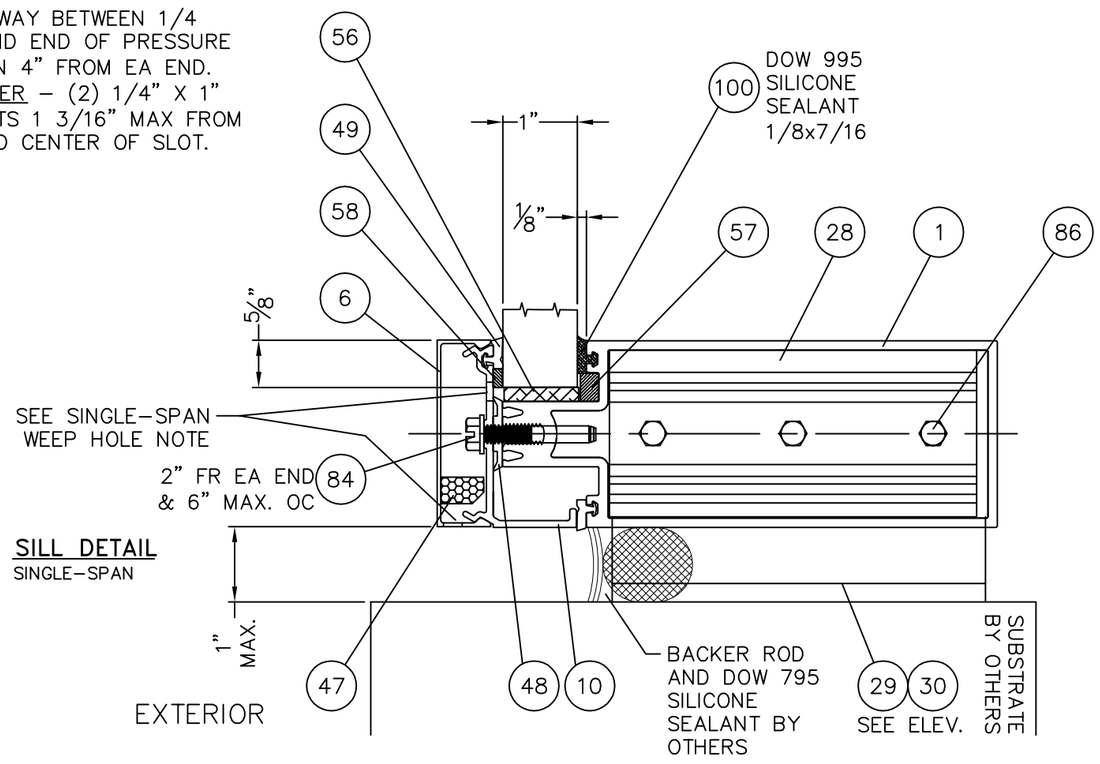

2/6 SILL DETAIL
SINGLE-SPAN

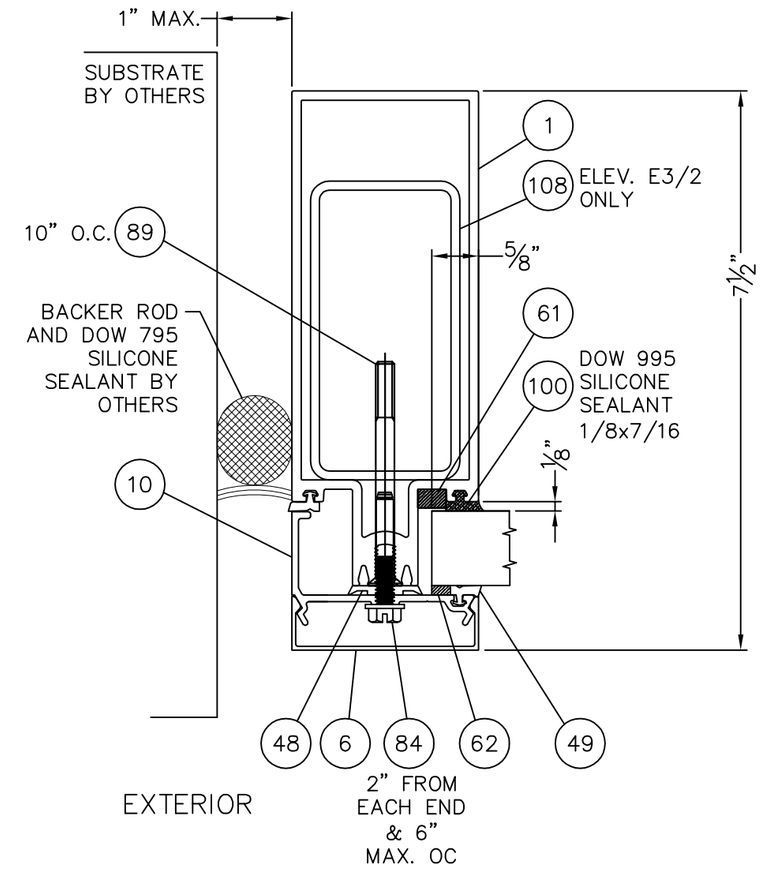

3/6 JAMB DETAIL
SINGLE-SPAN

STATE OF TEXAS
LUCAS A. TURNER
115094
LICENSED
PROFESSIONAL ENGINEER

9/28/2016
LUCAS A. TURNER, P.E.
TX PE # 115094
1239 JABARA AVE.
NORTH PORT, FL 34288
PH. 941-380-1574

TUBELITE
CW 400 SSG NON-IMPACT
CURTAIN WALL SYSTEM

TUBELITE®
DEPENDABLE
LEADERS IN ECO-EFFICIENT STOREFRONT, CURTAINWALL AND ENTRANCE SYSTEMS
3056 WALKER RIDGE DRIVE N.W.
WALKER, MICHIGAN 49544
PH: 800.866.2227
FX: 616.301.0008
WEB SITE: WWW.TUBELITEINC.COM

REVISION HISTORY:

REV	DATE	DRAWN	DESCRIPTION
O	9.28.16	LT	ORIGINAL RELEASE

DATE: 9.28.16
DRAWING NUMBER: TDI-400-SSG-NI
DRAWN:
FINAL REVIEW:
SCALE: N.T.S.
REVISION: O
SHEET NAME: SINGLE-SPAN PERIMETER DETAILS
SHEET: 6 OF 14

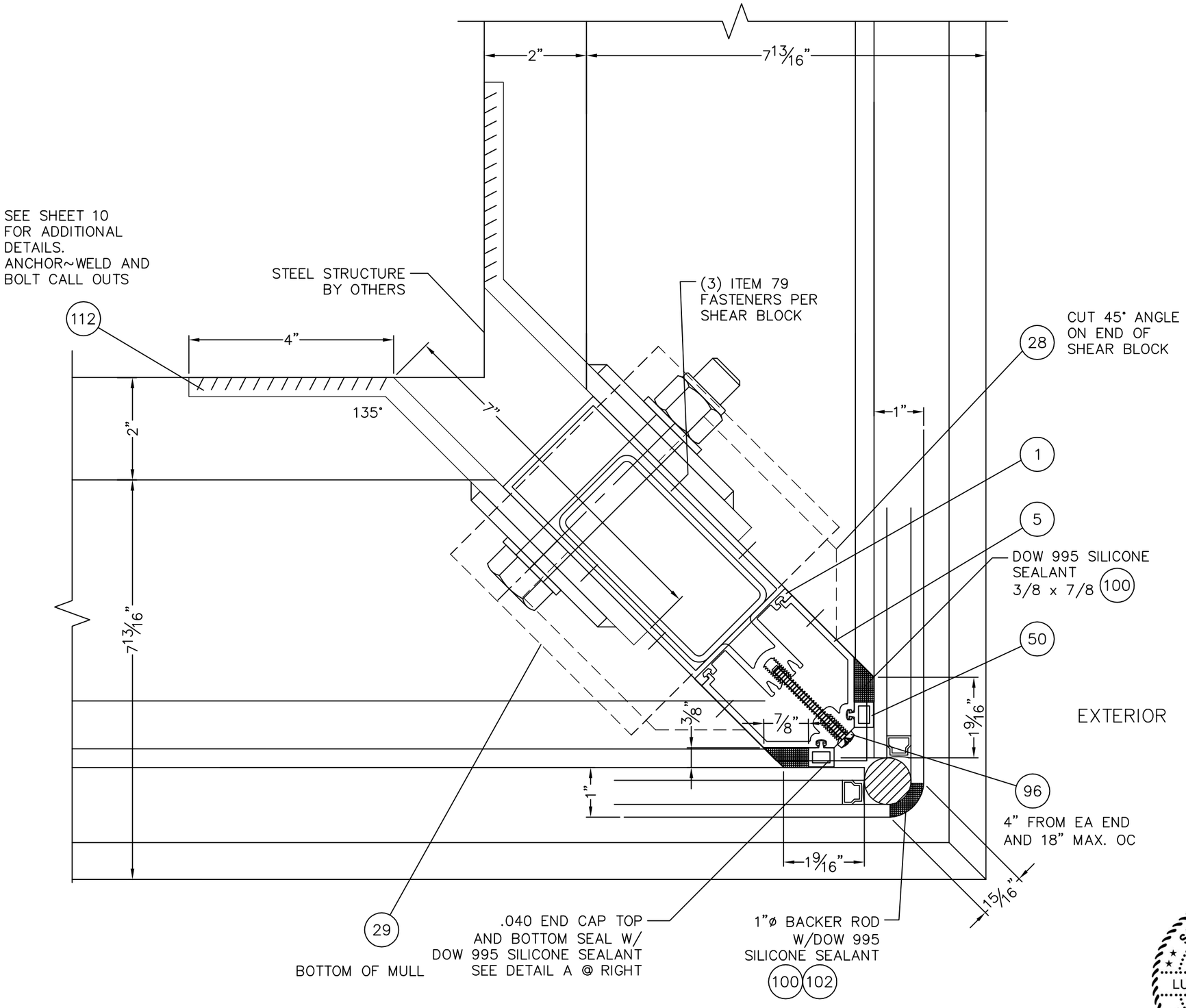

1/7 STRUCTURAL GLAZED OUTSIDE CORNER DETAIL

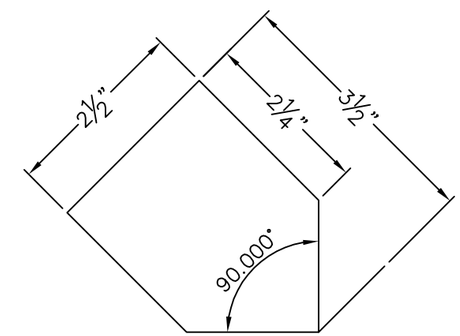

DETAIL A
.040 ALUM END CAP

STATE OF TEXAS
LUCAS A. TURNER
115094
LICENSED
PROFESSIONAL ENGINEER

JZ
9/28/2016
LUCAS A. TURNER, P.E.
TX PE # 115094
1239 JABARA AVE.
NORTH PORT, FL 34288
PH. 941-380-1574

TUBELITE
CW 400 SSG NON-IMPACT
CURTAIN WALL SYSTEM

TUBELITE®
DEPENDABLE
LEADERS IN ECO-EFFICIENT STOREFRONT, CURTAINWALL AND ENTRANCE SYSTEMS
3056 WALKER RIDGE DRIVE N.W.
WALKER, MICHIGAN 49544
PH: 800.866.2227
FX: 616.301.0008
WEB SITE: WWW.TUBELITEINC.COM

REVISION HISTORY:

REV	DATE	DRAWN	DESCRIPTION
0	9.28.16	LT	ORIGINAL RELEASE

DATE: 9.28.16
DRAWING NUMBER: TDI-400-SSG-NI
DRAWN:
FINAL REVIEW:
SCALE: N.T.S.
REVISION: 0
SHEET NAME: CORNER SECTION DETAIL
SHEET: 7 OF 14

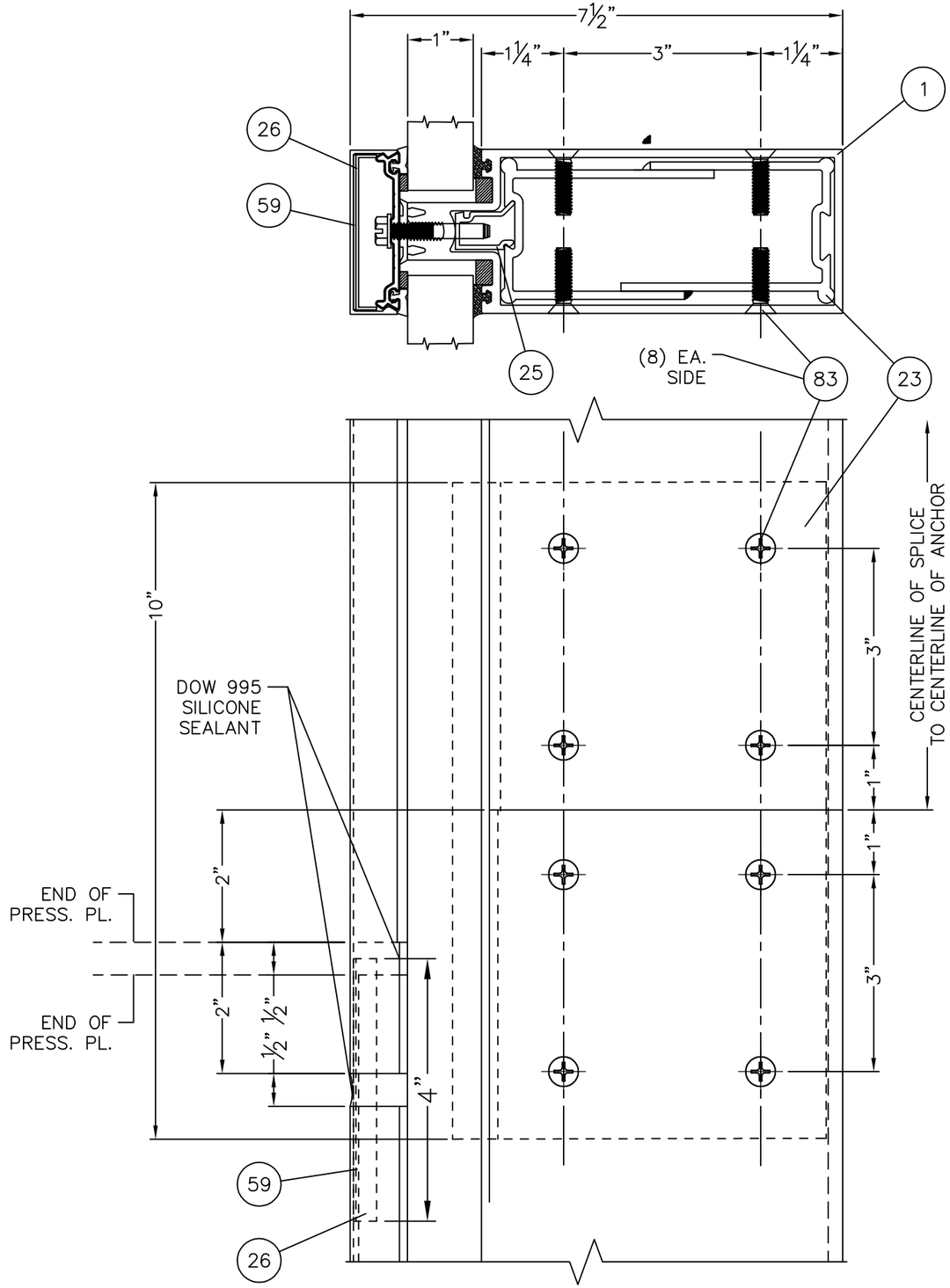

1/8 TYPICAL MULL SPLICE DETAIL

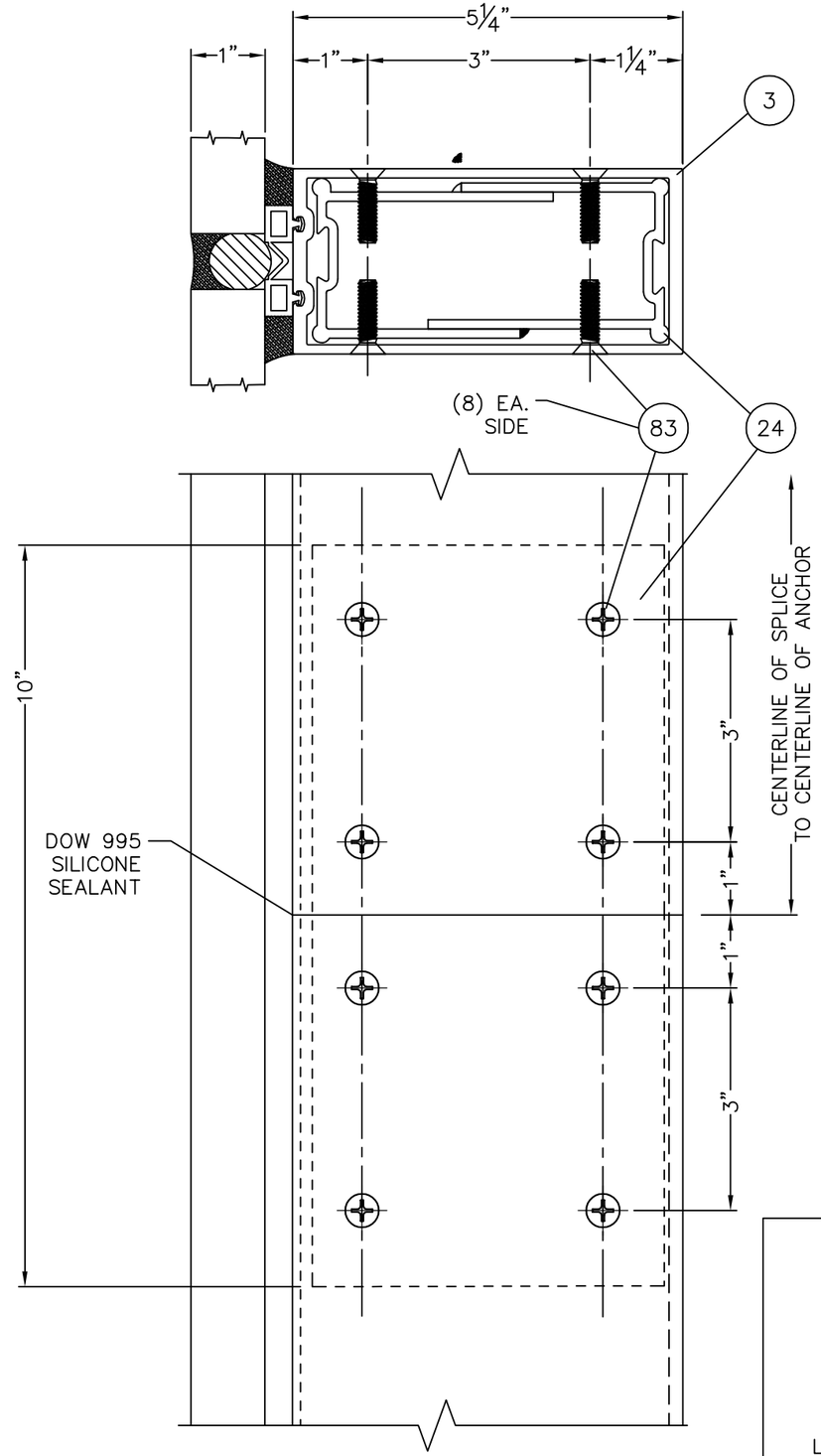

2/8 STRUCTURAL GLAZED MULL SPLICE DETAIL

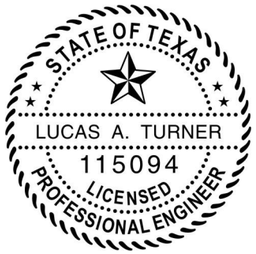

LT
9/28/2016
LUCAS A. TURNER, P.E.
TX PE # 115094
1239 JABARA AVE.
NORTH PORT, FL 34288
PH. 941-380-1574

TUBELITE
CW 400 SSG NON-IMPACT CURTAIN WALL SYSTEM

TUBELITE®
DEPENDABLE
LEADERS IN ECO-EFFICIENT STOREFRONT, CURTAINWALL AND ENTRANCE SYSTEMS
3056 WALKER RIDGE DRIVE N.W.
WALKER, MICHIGAN 49544
PH: 800.866.2227
FX: 616.301.0008
WEB SITE: WWW.TUBELITEINC.COM

REVISION HISTORY:

REV	DATE	DRAWN	DESCRIPTION
O	9.28.16	LT	ORIGINAL RELEASE

DATE: 9.28.16
DRAWING NUMBER: TDI-400-SSG-NI
DRAWN:
FINAL REVIEW:
SCALE: N.T.S.
REVISION: O
SHEET NAME: SPLICE JOINT DETAILS
SHEET: 8 OF 14

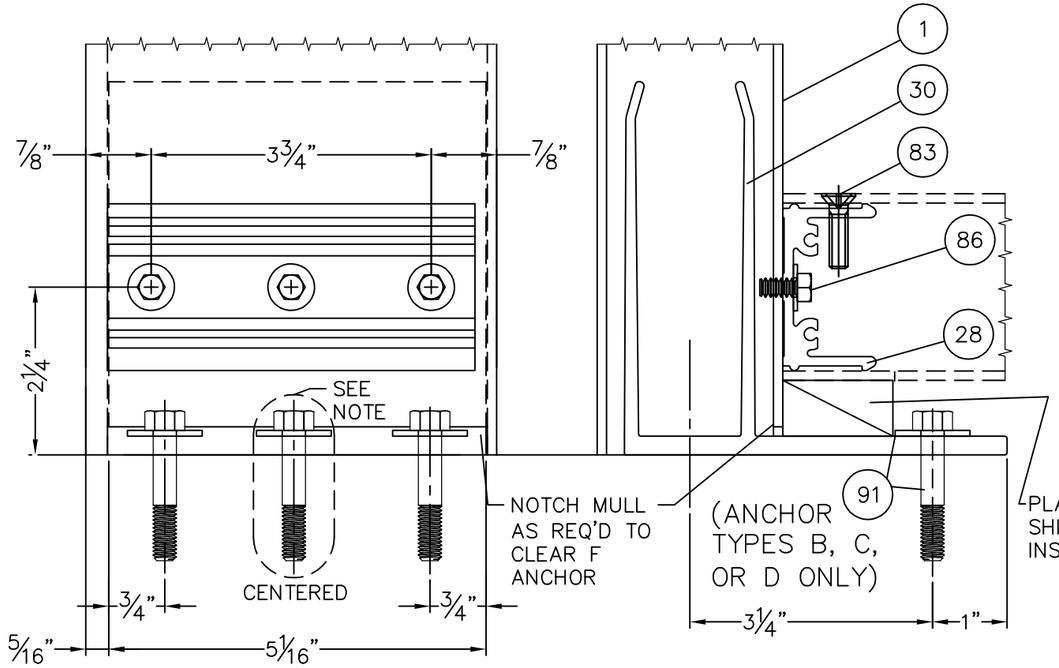

1/9 F ANCHOR AND SHEAR BLOCK CLIP ASSEMBLY & INSTALLATION @ DOOR MULL SILL ONLY

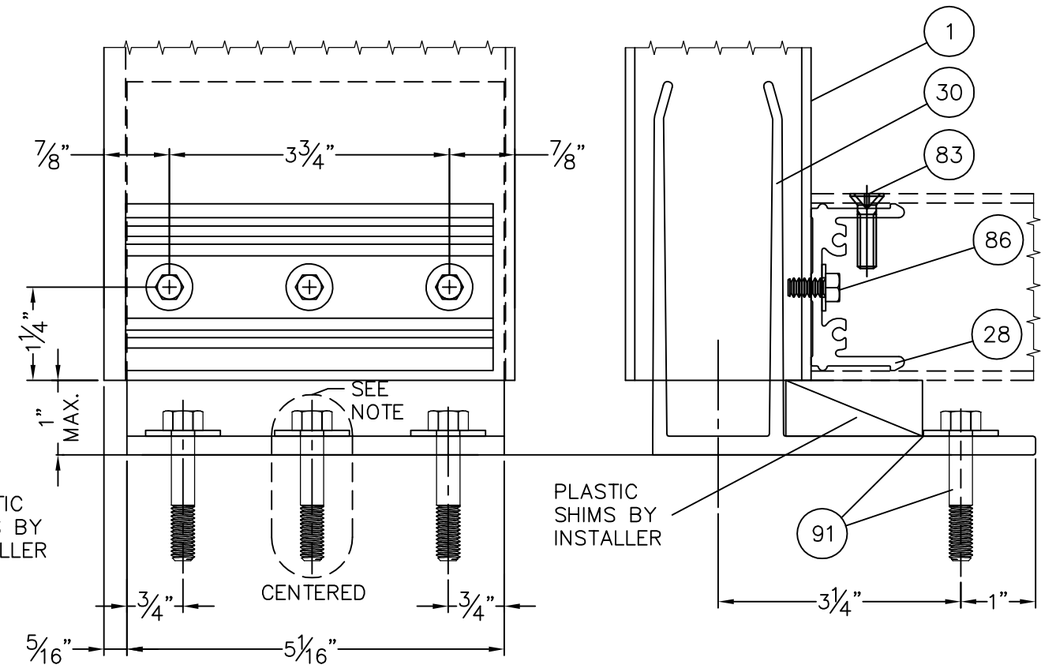

2/9 F ANCHOR AND SHEAR BLOCK CLIP ASSEMBLY & INSTALLATION @ JAMB MULL (HEAD AND SILL SIMILAR)

NOTE: DO NOT INSTALL CIRCLED ANCHORS WHEN USING ANCHOR TYPES A OR B IN CONCRETE, SEE TABLE E, SHT 2. INSTALL FOR ANCHOR TYPES C AND D.

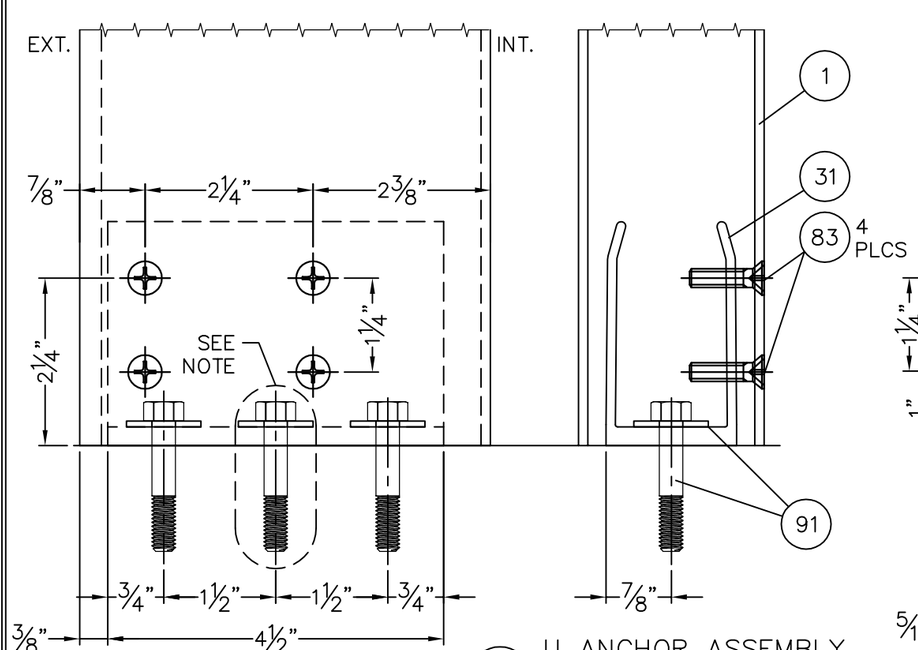

3/9 U ANCHOR ASSEMBLY & INSTALLATION @ DOOR JAMB ONLY

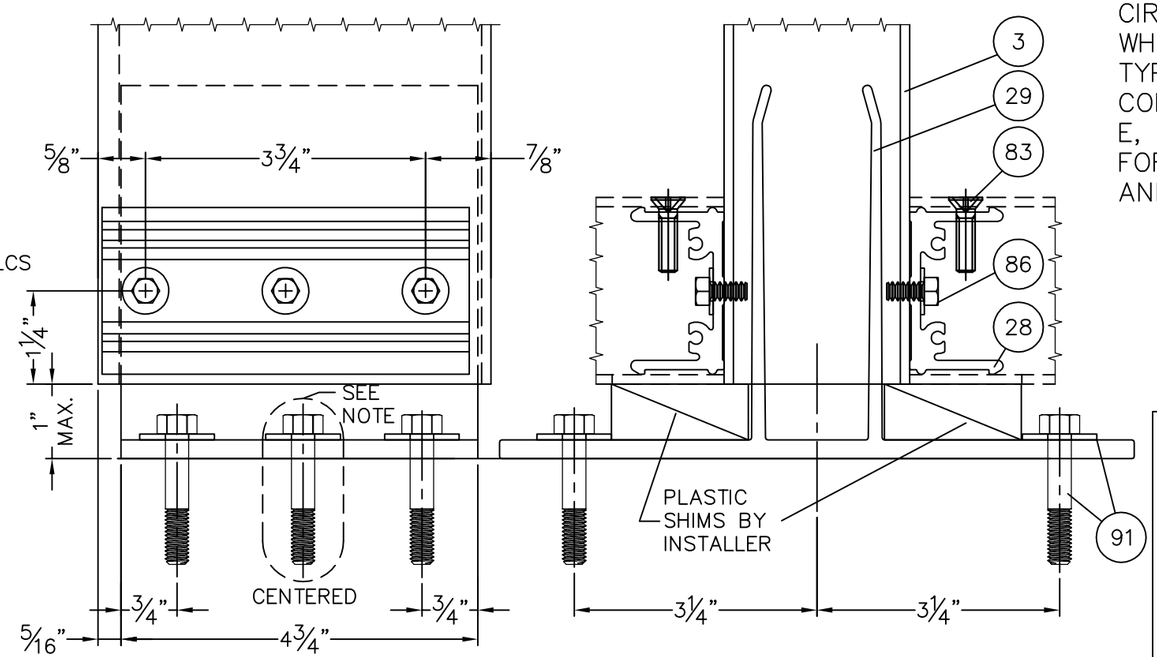

4/9 T ANCHOR AND SHEAR BLOCK CLIP ASSEMBLY & INSTALLATION @ TYP STRUCTURAL MULL (HEAD AND SILL SIM.)

STATE OF TEXAS
LUCAS A. TURNER
115094
LICENSED
PROFESSIONAL ENGINEER

9/28/2016

LUCAS A. TURNER, P.E.
TX PE # 115094
1239 JABARA AVE.
NORTH PORT, FL 34288
PH. 941-380-1574

TUBELITE
CW 400 SSG NON-IMPACT CURTAIN WALL SYSTEM

TUBELITE®
DEPENDABLE
LEADERS IN ECO-EFFICIENT STOREFRONT, CURTAINWALL AND ENTRANCE SYSTEMS
3056 WALKER RIDGE DRIVE N.W.
WALKER, MICHIGAN 49544
PH: 800.866.2227
FX: 616.301.0008
WEB SITE: WWW.TUBELITEINC.COM

REVISION HISTORY:

REV	DATE	DRAWN	DESCRIPTION
0	9.28.16	LT	ORIGINAL RELEASE

DATE: 9.28.16
DRAWING NUMBER: TDI-400-SSG-NI
DRAWN:
FINAL REVIEW:
SCALE: N.T.S.
REVISION: 0
SHEET NAME: ANCHOR DETAILS
SHEET: 9 OF 14

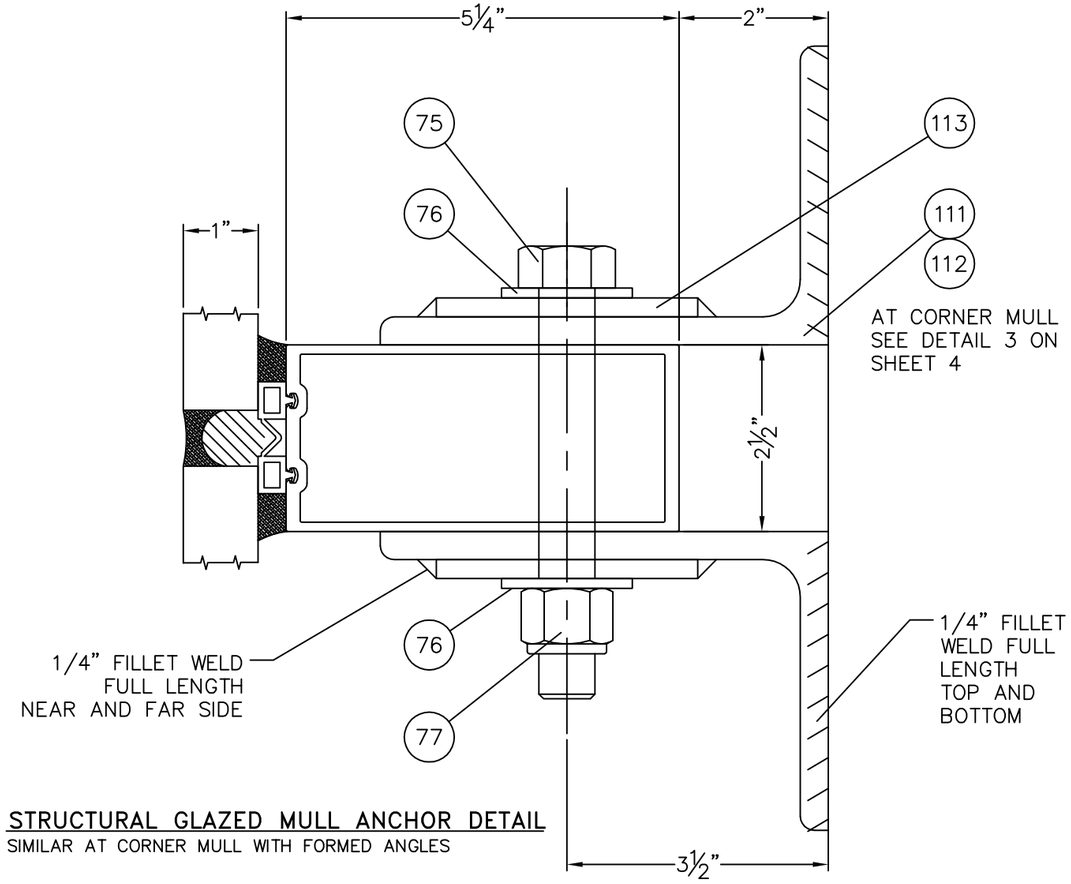

1/10 STRUCTURAL GLAZED MULL ANCHOR DETAIL
SIMILAR AT CORNER MULL WITH FORMED ANGLES

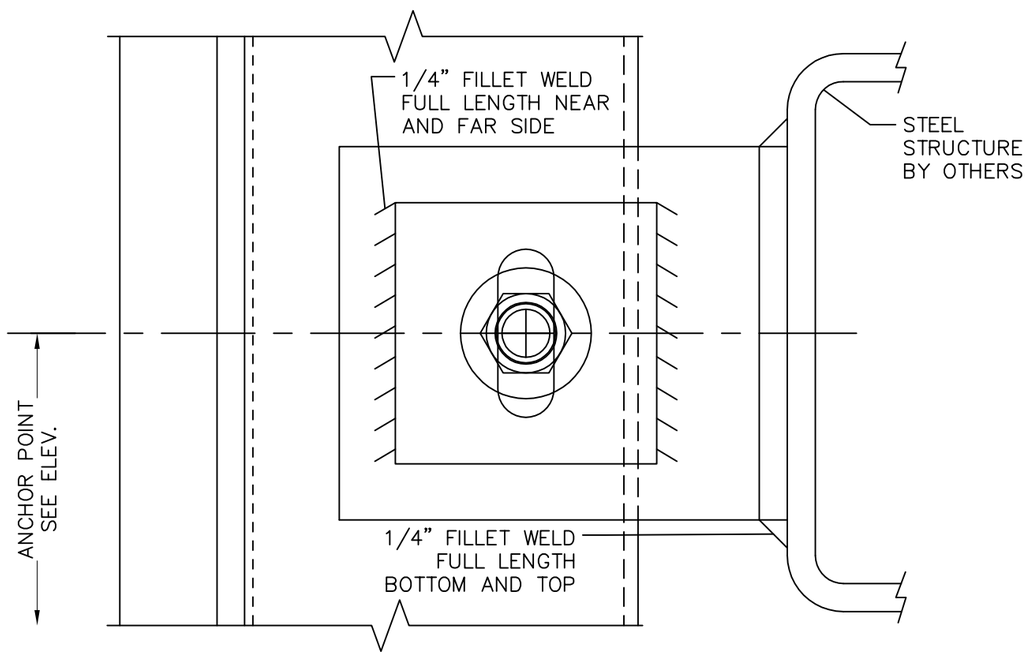

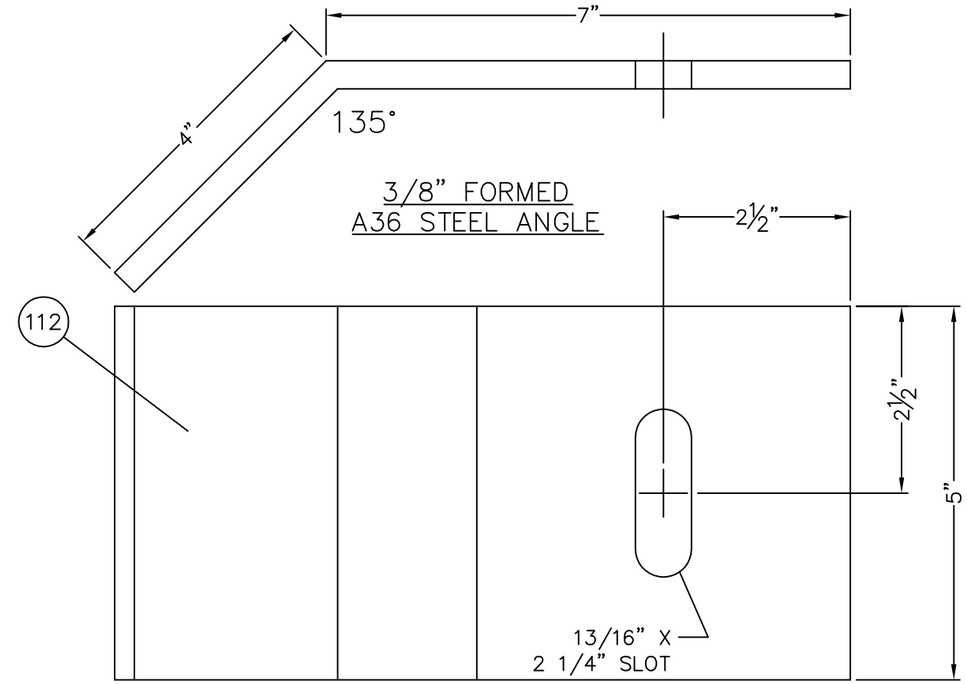

STEEL ANCHOR PARTS BY OTHERS

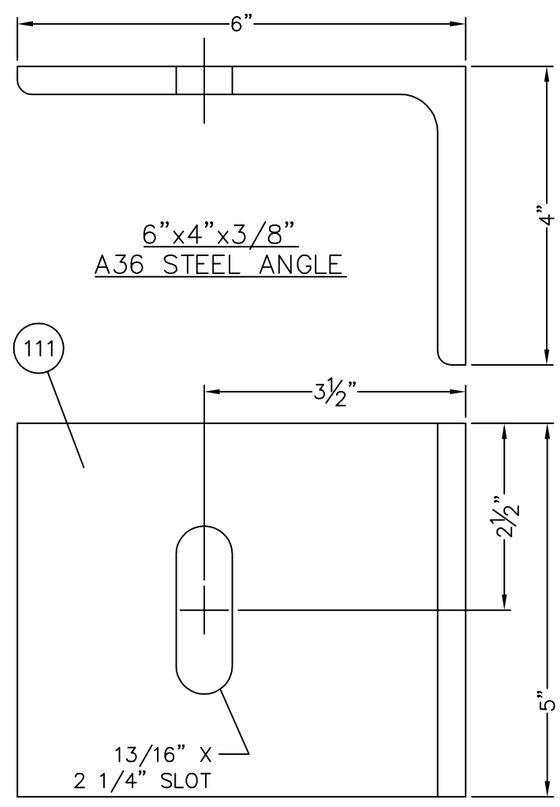

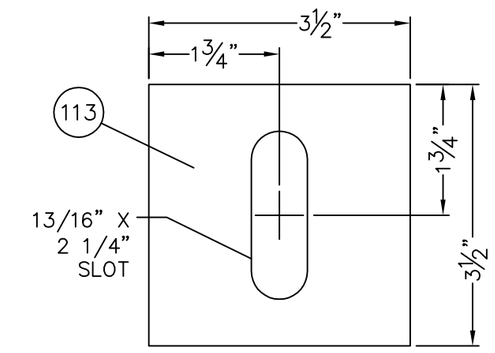

1/4" A36 STEEL PLATE

STATE OF TEXAS
LUCAS A. TURNER
115094
LICENSED
PROFESSIONAL ENGINEER

9/28/2016
LUCAS A. TURNER, P.E.
TX PE # 115094
1239 JABARA AVE.
NORTH PORT, FL 34288
PH. 941-380-1574

TUBELITE
CW 400 SSG NON-IMPACT
CURTAIN WALL SYSTEM

TUBELITE®
DEPENDABLE
LEADERS IN ECO-EFFICIENT STOREFRONT, CURTAINWALL AND ENTRANCE SYSTEMS
3056 WALKER RIDGE DRIVE N.W.
WALKER, MICHIGAN 49544
PH: 800.866.2227
FX: 616.301.0008
WEB SITE: WWW.TUBELITEINC.COM

REVISION HISTORY:

REV	DATE	DRAWN	DESCRIPTION
0	9.28.16	LT	ORIGINAL RELEASE

DATE: 9.28.16
DRAWING NUMBER: TDI-400-SSG-NI
DRAWN:
FINAL REVIEW:
SCALE: N.T.S.
REVISION: 0
SHEET NAME: ANCHOR DETAILS
SHEET: 10 OF 14

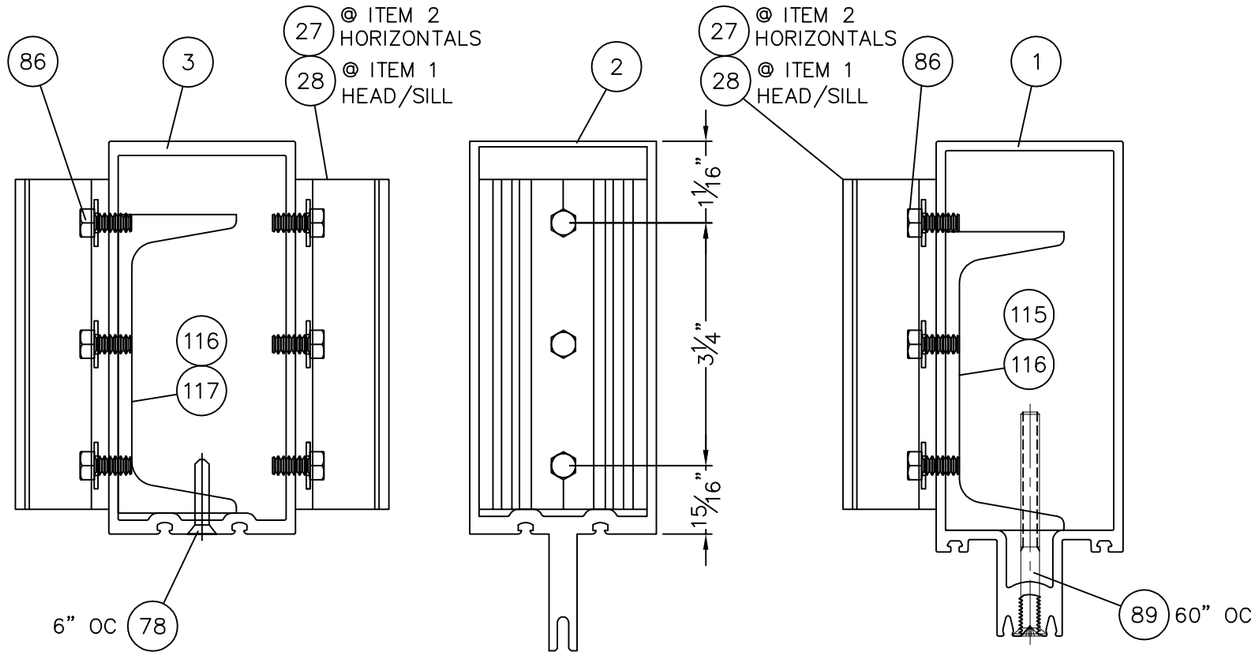

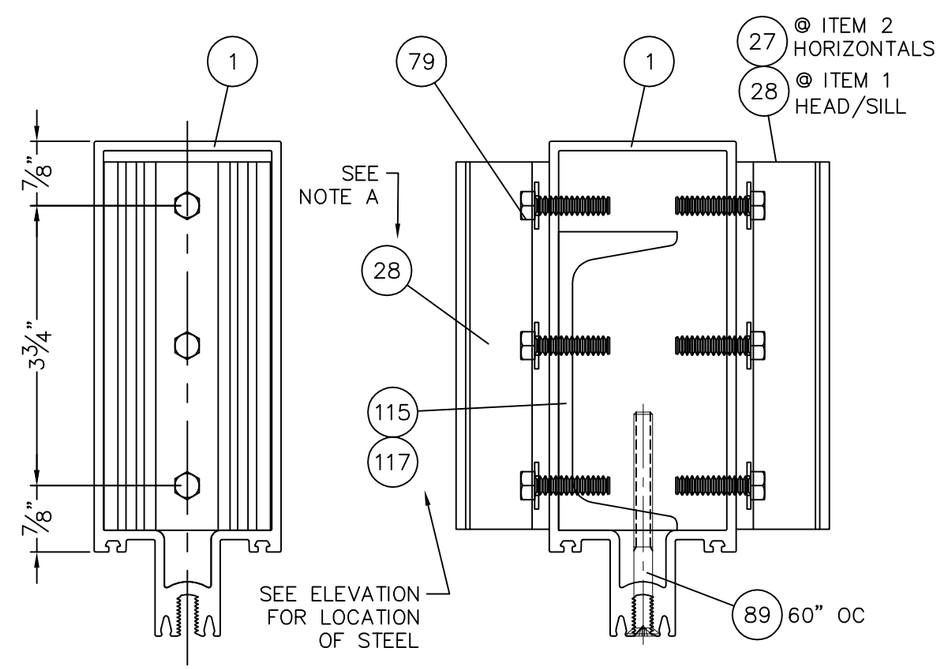

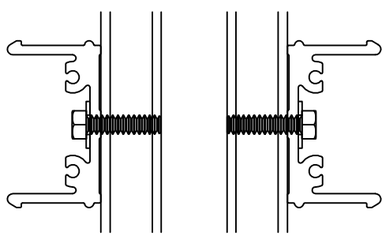

STEEL REINFORCEMENT ATTACHMENT @ STRUCTURAL GLAZED HORIZONTAL SHEAR BLOCK

NOTE: SEE ELEVATIONS FOR STEEL LOCATIONS

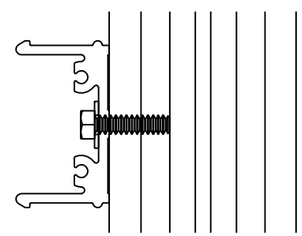

JAMB MULL

STEEL REINFORCEMENT ATTACHMENT @ CAPTURED HORIZONTAL SHEAR BLOCK

NOTE: SEE ELEVATIONS FOR STEEL LOCATIONS

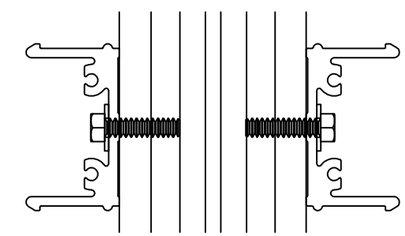

OUTSIDE CORNER MULL

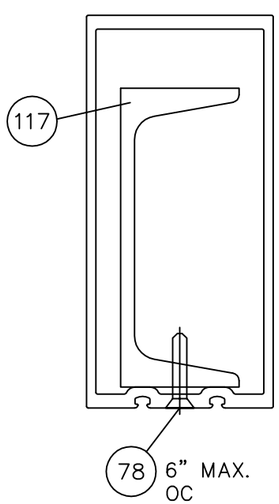

STEEL REINFORCEMENT ATTACHMENT @ ITEM 117 (24" LG CHANNEL)

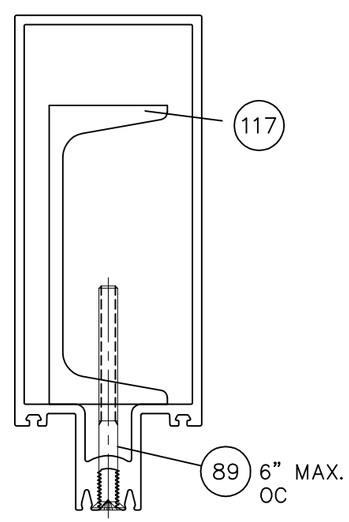

STATE OF TEXAS
LUCAS A. TURNER
115094
LICENSED
PROFESSIONAL ENGINEER

9/28/2016
LUCAS A. TURNER, P.E.
TX PE # 115094
1239 JABARA AVE.
NORTH PORT, FL 34288
PH. 941-380-1574

TUBELITE
CW 400 SSG NON-IMPACT CURTAIN WALL SYSTEM

TUBELITE®
DEPENDABLE
LEADERS IN ECO-EFFICIENT STOREFRONT, CURTAINWALL AND ENTRANCE SYSTEMS
3056 WALKER RIDGE DRIVE N.W.
WALKER, MICHIGAN 49544
PH: 800.866.2227
FX: 616.301.0008
WEB SITE: WWW.TUBELITEINC.COM

REVISION HISTORY:

REV	DATE	DRAWN	DESCRIPTION
O	9.28.16	LT	ORIGINAL RELEASE

DATE: 9.28.16
DRAWING NUMBER: TDI-400-SSG-NI
DRAWN:
FINAL REVIEW:
SCALE: N.T.S.
REVISION: O
SHEET NAME: ASSEMBLY DETAILS
SHEET: 11 OF 14

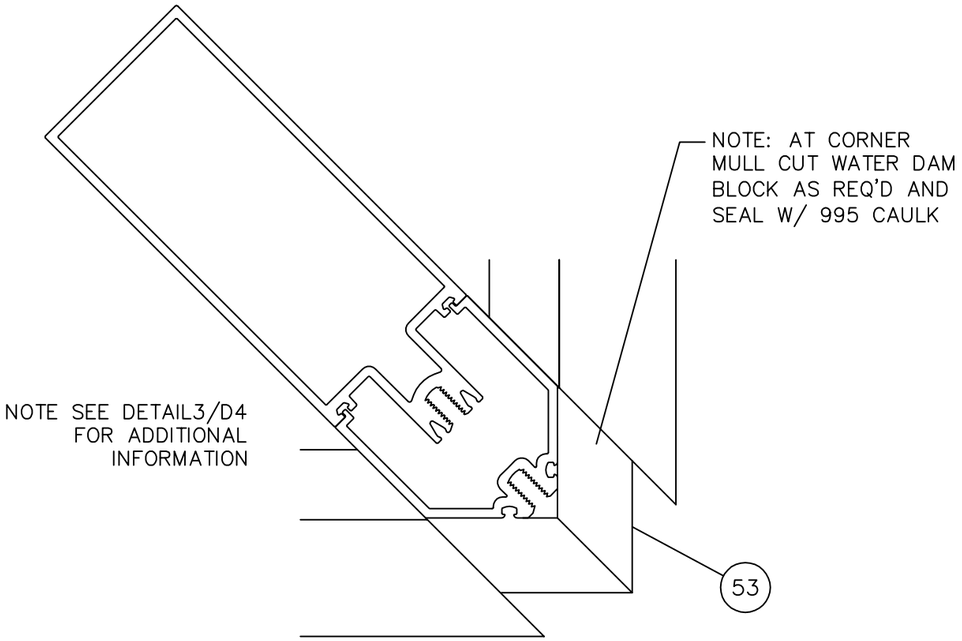

SSG COMPONENT ILLUSTRATION

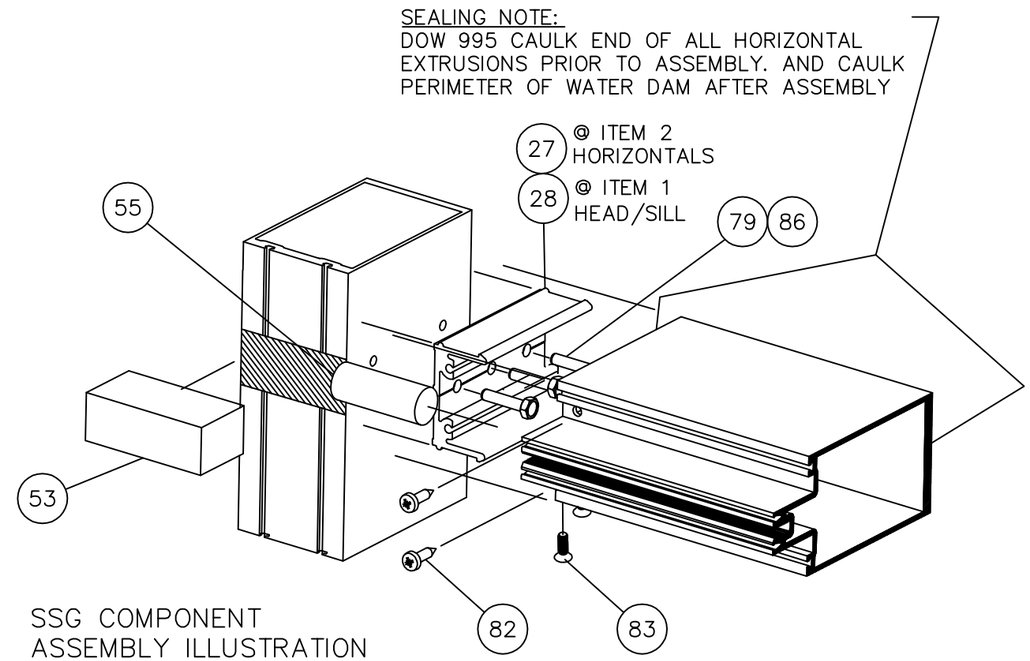

SSG COMPONENT ASSEMBLY ILLUSTRATION

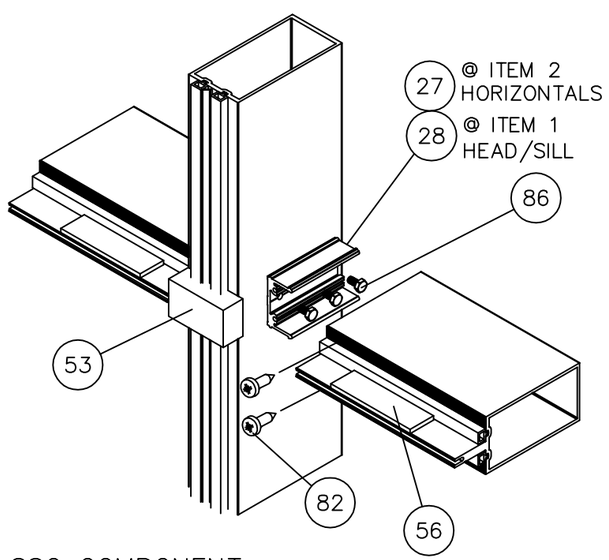

SSG COMPONENT ASSEMBLY ILLUSTRATION

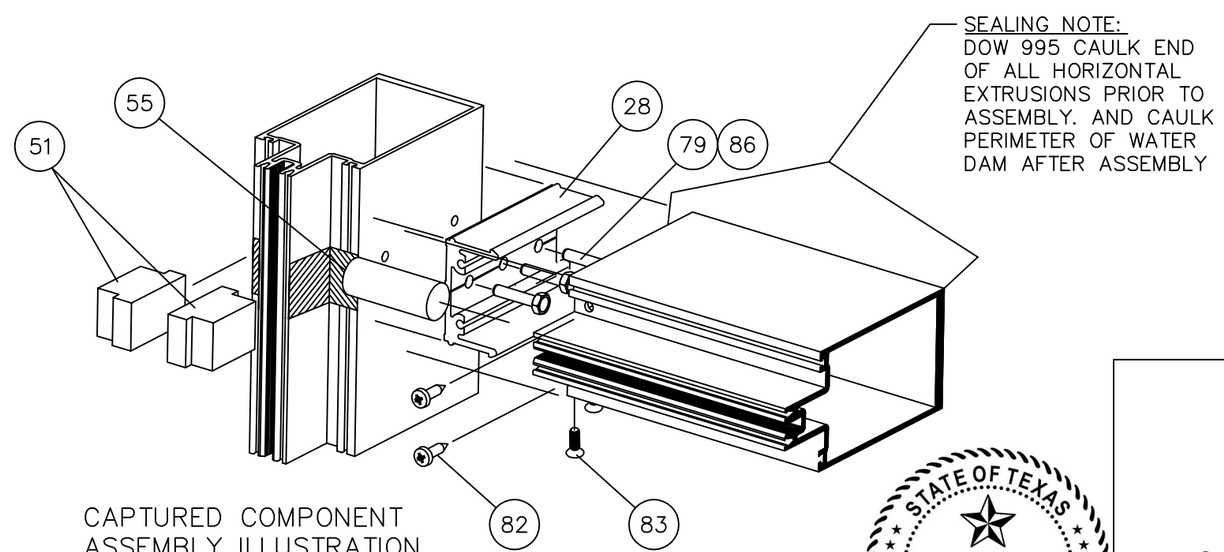

CAPTURED COMPONENT ASSEMBLY ILLUSTRATION

STATE OF TEXAS
LUCAS A. TURNER
115094
LICENSED
PROFESSIONAL ENGINEER

9/28/2016
LUCAS A. TURNER, P.E.
TX PE # 115094
1239 JABARA AVE.
NORTH PORT, FL 34288
PH. 941-380-1574

TUBELITE
CW 400 SSG NON-IMPACT CURTAIN WALL SYSTEM

TUBELITE®
DEPENDABLE
LEADERS IN ECO-EFFICIENT STOREFRONT, CURTAINWALL AND ENTRANCE SYSTEMS
3056 WALKER RIDGE DRIVE N.W.
WALKER, MICHIGAN 49544
PH: 800.866.2227
FX: 616.301.0008
WEB SITE: WWW.TUBELITEINC.COM

REVISION HISTORY:

REV	DATE	DRAWN	DESCRIPTION
O	9.28.16	LT	ORIGINAL RELEASE

DATE: 9.28.16
DRAWING NUMBER: TDI-400-SSG-NI
DRAWN:
FINAL REVIEW:
SCALE: N.T.S.
REVISION: O
SHEET NAME: ASSEMBLY DETAILS
SHEET: 12 OF 14

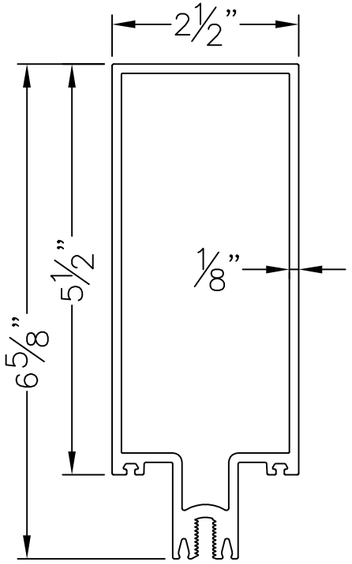

ITEM 1 – E55TB02FS
CURTAINWALL TUBE

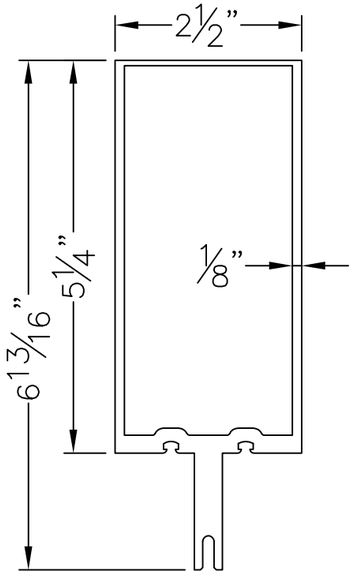

ITEM 2 – E5TB252FS
CURTAINWALL TUBE

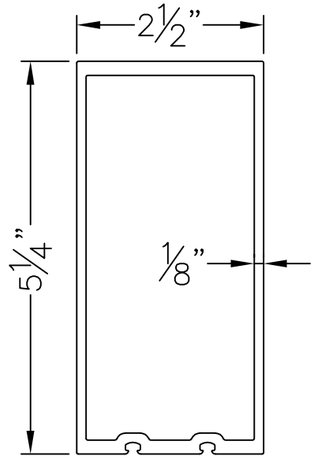

ITEM 3 –
E55TB04FS
CURTAINWALL
STRUCTURAL
GLAZING TUBE

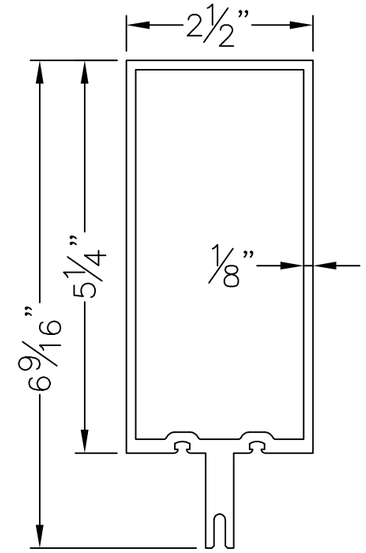

ITEM 4 – E5TB108B
CURTAINWALL TUBE

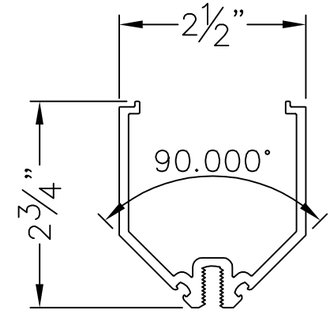

ITEM 5 – E5TB67FS
OUTSIDE CORNER
BUTT GLAZED
CURTAINWALL ADAPTOR

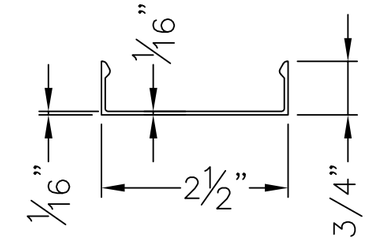

ITEM 6 – E4TB64FS
COVER, FACE
2–1/2 X 3/4

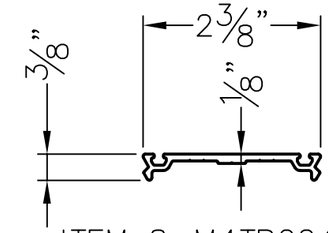

ITEM 8–M4TB224
PRESSUE PLATE (1")

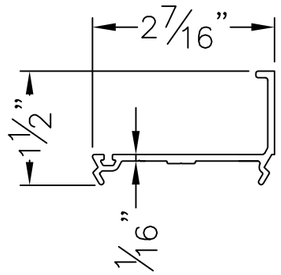

ITEM 10–M4TB225
CURTAINWALL FILLER–
PRESSUE PLATE (1")

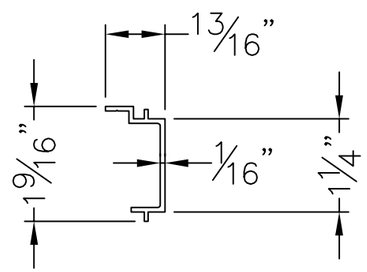

ITEM 13 – E3192
GLAZING POCKET
CLOSURE (1")

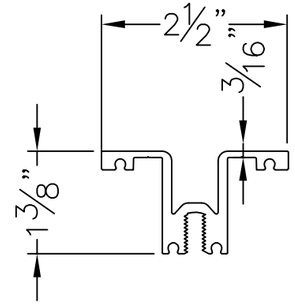

ITEM 16 –
E4TB170FS SCREW
APPLIED HORN

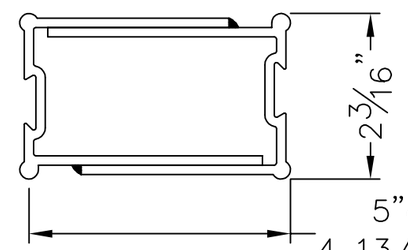

5"~P1627D
4 13/16"~P1627J

ITEM 23 & 24
P1627D ~ USE WITH ITEM 1
P1627J ~ USE WITH ITEM 3
MULL SPLICE 10" LG

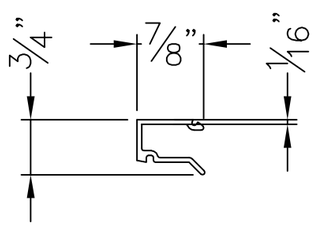

ITEM 25 – P1631
FILLER 10" LG

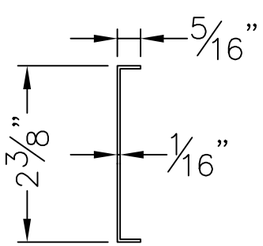

ITEM 26 – P1628B
FACE COVER SPLICE
SLEEVE 4" LG

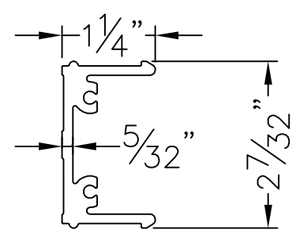

E4TB113 – EXTRUSION
ITEM 27 – PTB59
ITEM 28 – PTB60
SHEAR BLOCK CLIP

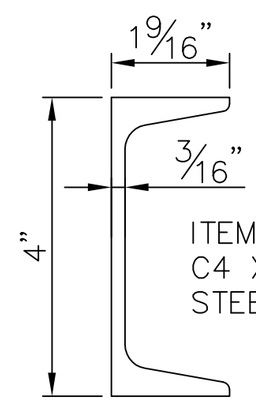

ITEM 115–118
C4 X 5.4 A36
STEEL CHANNEL

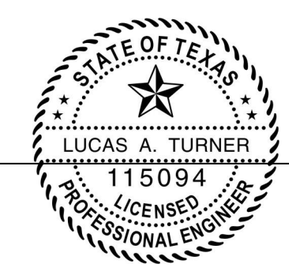

9/28/2016
LUCAS A. TURNER, P.E.
TX PE # 115094
1239 JABARA AVE.
NORTH PORT, FL 34288
PH. 941–380–1574

TUBELITE
CW 400 SSG NON-IMPACT
CURTAIN WALL SYSTEM

TUBELITE®
DEPENDABLE
LEADERS IN ECO-EFFICIENT STOREFRONT, CURTAINWALL AND ENTRANCE SYSTEMS
3056 WALKER RIDGE DRIVE N.W.
WALKER, MICHIGAN 49544
PH: 800.866.2227
FX: 616.301.0008
WEB SITE: WWW.TUBELITEINC.COM

REVISION HISTORY:

REV	DATE	DRAWN	DESCRIPTION
O	9.28.16	LT	ORIGINAL RELEASE

DATE: 9.28.16
DRAWING NUMBER: TDI-400-SSG-NI
DRAWN:
FINAL REVIEW:
SCALE: N.T.S.
REVISION: O
SHEET NAME: PART DRAWINGS
SHEET: 13 OF 14

CW 400 SSG NON-IMPACT – PARTS LIST

ITEM	PART NUMBER	DESCRIPTION	MATERIAL
1	E55TB02FS	EXTRUSION, TUBE, NON-THERMAL	ALUMINUM – 6063-T6
2	E5TB252FS	EXTRUSION, TUBE SSG HORIZONTAL	ALUMINUM – 6063-T5
3	E55TB04FS	EXTRUSION, TUBE, STRUCTURAL GLAZING	ALUMINUM – 6063-T6
4	E55TB108B	EXTRUSION, TUBE SSG HORIZONTAL	ALUMINUM – 6063-T5
5	E5TB67FS	EXTRUSION, OUTSIDE BUTT GLAZED CORNER	ALUMINUM – 6063-T5
6	E4TB64FS	EXTRUSION, COVER, FACE, 2-1/2 X ¾	ALUMINUM – 6063-T5
8	M4TB224	EXTRUSION, PRESSURE PLATE (1")	ALUMINUM – 6063-T5
10	M4TB225	EXTRUSION, FILLER-PRESSURE PLATE (1")	ALUMINUM – 6063-T5
13	E3192	EXTRUSION, GLAZING POCKET FILLER (1")	ALUMINUM – 6063-T5
16	E4TB170FS	EXTRUSION, SCREW APPLIED HORN	ALUMINUM – 6063-T5
23	P1627D	MULL SPLICE FOR ITEM 1	ALUMINUM – 6063-T5
24	P1627J	MULL SPLICE FOR ITEM 3	ALUMINUM – 6063-T5
25	P1631	MULL SPLICE FILLER FOR ITEM 1	ALUMINUM – 6063-T5
26	P1628B	FACE COVER SPLICE SLEEVE	ALUMINUM – 6063-T5
27	PTB59F	SHEAR BLOCK	ALUMINUM – 6063-T5
28	PTB60F	SHEAR BLOCK	ALUMINUM – 6063-T5
29	PTB21A/B	ANCHOR, 'T' CUT & PRE-DRILLED. LG P/N A=4.761", B=5.053"	ALUMINUM – 6063-T6
30	PTB20A/B	ANCHOR, 'F' CUT & PRE-DRILLED. LG P/N A=4.761", B=5.053"	ALUMINUM – 6063-T6
31	PTB22	ANCHOR, 'U' CUT & PRE-DRILLED	ALUMINUM – 6063-T6
47	PTB42	WEEP BAFFLE	P-PART – FOAM
48	PTB94	GASKET, THERMAL BARRIER, EPG (PRESSURE PLATE)	P-PART – RUBBER
49	PTB28	GLAZING, FIXED, ⅛ THICK (CW)	P-PART – RUBBER
50	PTB75	GASKET, STRUCTURAL GLAZING	P-PART – RUBBER
51	PTB93	WATER DAM SINGLE POCKET	P-PART – RUBBER
53	PTB76A	WATER DAM 1"	P-PART – RUBBER
55	P1094	ROD, ETHAFOAM ¾" DIA X 2" LONG	P-PART – FOAM
56		BLOCK, SETTING, 3/16" x 1" x 4" LG	P-PART – SILICONE
57	P6551	GLAZING TAPE 1/4 x 3/8 (THERMALBOND V2100 OR V2200)	P-PART – FOAM
58	P6552	GLAZING TAPE 1/8 x 1/4 (THERMALBOND V2100 OR V2200)	P-PART – FOAM
59	BY OTHERS	TWO FACE TAPE	P-PART – FOAM
61	TREMCO SGT 922	GLAZING TAPE 1/4 x 3/8	P-PART – FOAM
62	TREMCO SGT 922	GLAZING TAPE 1/8 x 1/4	P-PART – FOAM
75	BY OTHERS	BOLT, 3/4-10 X 5 1/4 HEX HEAD CLASS 2A	P-PART – FASTENER
76	BY OTHERS	3/4 FLAT WASHER	P-PART – FASTENER
77	BY OTHERS	3/4-10 HEX HEAD NYLOCK NUT	P-PART – FASTENER
78	S207	SCREW, 10-24 X 1 1/4 FLAT HEAD PHIL	P-PART – FASTENER
79	S328	SCREW, 1/4-20 X 1 HEX HEAD TYPE D (shear block)	P-PART – FASTENER
82	S270	SCREW, 10-24 X ¾ PAN HEAD PHIL, SS (shear block)	P-PART – FASTENER
83	S6505	SCREW, 1/4-20 X 3/4 FLAT HEAD CLASS 2A (shear blk & mull splice)	P-PART – FASTENER
84	S359	SCREW, 1/4-20 1-1/2 HEX HD TYPE F (pres plate)	P-PART – FASTENER
85	S191	SCREW, 10-24 X ½ TRUSS HEAD PHIL (horiz mull & dr stop)	P-PART – FASTENER
86	S139	SCREW, 1/4-20 X ½ HEX HEAD TYPE B (shear blk)	P-PART – FASTENER
87	S369	SCREW, 1/4-20 3/4 HEX HD TYPE CA (pres plate & subframe w/ shim)	P-PART – FASTENER
88	S131	SCREW, 8-32 5/16 FLAT HEAD PHIL (lock face plate)	P-PART – FASTENER
89	S155	SCREW, 1/4-20 X 3" FLAT HEAD PHIL (reinforcing steel)	P-PART – FASTENER
91	BY OTHERS	INSTALLATION ANCHORS AND WASHERS, SEE TABLE D, SHEET 2	
96	S211	SCREW, 1/4-20 X 2 1/4 PAN HEAD PHIL, SS	P-PART – FASTENER

ITEM	PART NUMBER	DESCRIPTION	MATERIAL
99	BY OTHERS	DOW 795 SILICONE BUILDING SEALANT	
100	BY OTHERS	DOW 995 SILICONE SEALANT BLACK – STRUCTURAL GLAZING	
101	BY OTHERS	3/4 ø BACKER ROD- STRUCTURAL GLAZING	
102	BY OTHERS	1 1/4 ø BACKER ROD- STRUCTURAL GLAZING	
108	P6600	TUBE, 2"x4"x11 GA (.120) WALL (120" LG)	A36 STEEL
109	P6601	TUBE, 2"x4"x1/4" WALL (120" LG)	A36 STEEL
111	P6603	ANGLE 6"x4"x3/8"	A36 STEEL
112	P6604	FORMED ANGLE 7"x4"x3/8"	A36 STEEL
113	P6605	PLATE 3 1/2"x3 1/2"	A36 STEEL
115	P6606	CHANNEL C4x5.4 (84" LG)	A36 STEEL
116	P6607	CHANNEL C4x5.4 (198" LG)	A36 STEEL
117	P6608	CHANNEL C4x5.4 (24" LG)	A36 STEEL
118	P6609	CHANNEL C4x5.4 (120" LG)	A36 STEEL

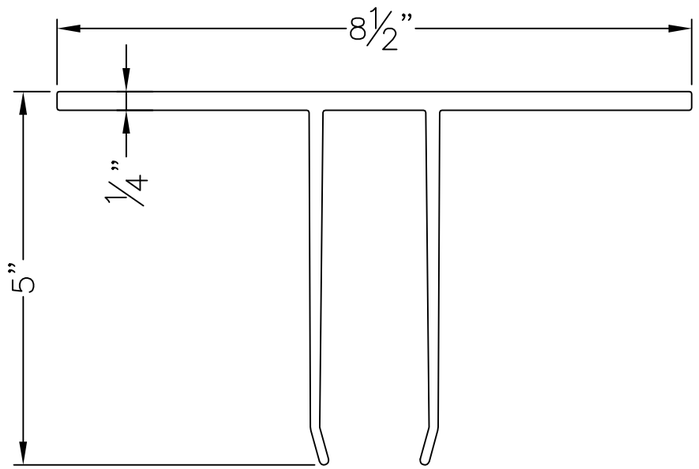

ITEM 29 – PTB21
T ANCHOR

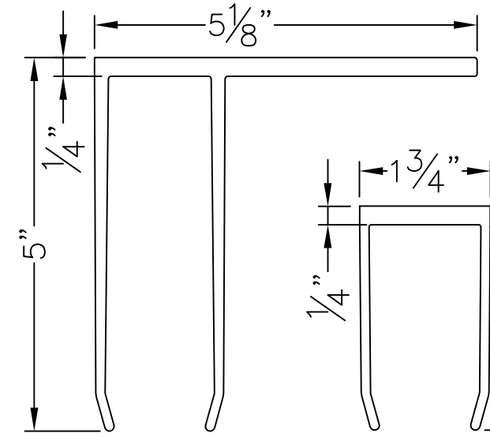

ITEM 30 – PTB20
F ANCHOR

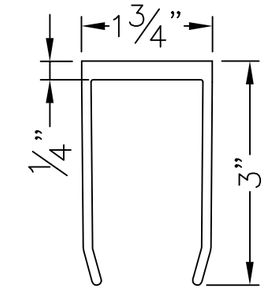

ITEM 31 – PTB22
U ANCHOR

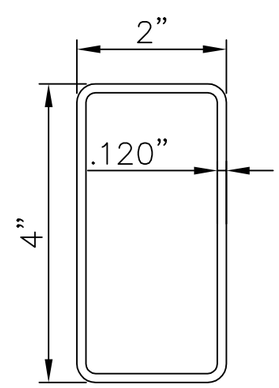

ITEM 108 P6600
2"X4"x .120
A36 STEEL TUBE

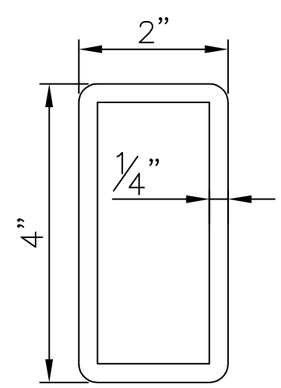

ITEM 109 P6601
2"x4"x 1/4"
A36 STEEL TUBE

STATE OF TEXAS
LUCAS A. TURNER
115094
LICENSED
PROFESSIONAL ENGINEER

9/28/2016
LUCAS A. TURNER, P.E.
TX PE # 115094
1239 JABARA AVE.
NORTH PORT, FL 34288
PH. 941-380-1574

TUBELITE
CW 400 SSG NON-IMPACT
CURTAIN WALL SYSTEM

TUBELITE®
DEPENDABLE
LEADERS IN ECO-EFFICIENT STOREFRONT, CURTAINWALL AND ENTRANCE SYSTEMS
3056 WALKER RIDGE DRIVE N.W.
WALKER, MICHIGAN 49544
PH: 800.866.2227
FX: 616.301.0008
WEB SITE: WWW.TUBELITEINC.COM

REVISION HISTORY:

REV	DATE	DRAWN	DESCRIPTION
O	9.28.16	LT	ORIGINAL RELEASE

DATE: 9.28.16
DRAWING NUMBER: TDI-400-SSG-NI
DRAWN:
FINAL REVIEW:
SCALE: N.T.S.
REVISION: O
SHEET NAME: BOM, PART DWGS
SHEET: 14 OF 14