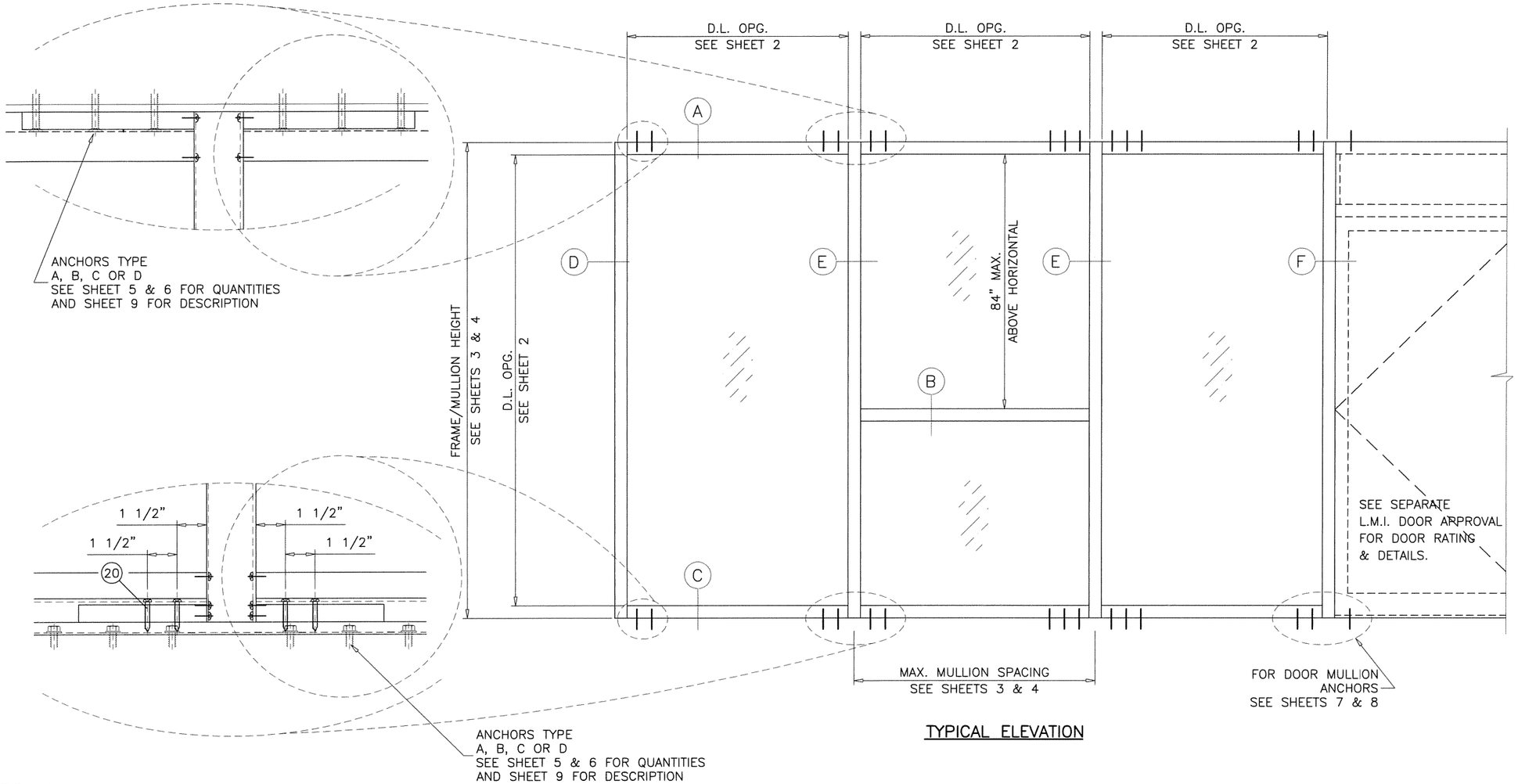

TYPICAL ELEVATION

SERIES YHS-50 FI
ALUMINUM STOREFRONT SYSTEM

THIS SYSTEM MAY BE USED IN CONJUNCTION WITH IRC/IBC APPROVED LARGE MISSILE IMPACT RESISTANT ENTRANCE DOORS.
LOWER DESIGN PRESSURE FROM STOREFRONT OR DOOR APPROVAL WILL APPLY TO ENTIRE SYSTEM.

CODE REQUIREMENTS FOR SAFEGUARDS MUST BE OBSERVED.

THIS PRODUCT HAS BEEN DESIGNED AND TESTED TO COMPLY WITH THE REQUIREMENTS OF THE 2006 INTERNATIONAL RESIDENTIAL CODE (IRC) AND 2006 INTERNATIONAL BUILDING CODE (IBC) WITH TEXAS REVISIONS.
TESTING PERFORMED IN ACCORDANCE WITH FLORIDA PROTOCOLS TAS201, 202 & 203.

WOOD BUCKS BY OTHERS, MUST BE ANCHORED PROPERLY TO TRANSFER LOADS TO THE STRUCTURE.

ANCHORS SHALL BE AS LISTED, SPACED AS SHOWN ON DETAILS, ANCHORS EMBEDMENT TO BASE MATERIAL SHALL BE BEYOND WALL DRESSING OR STUCCO.

ANCHORING OR LOADING CONDITIONS NOT SHOWN IN THESE DETAILS ARE NOT PART OF THIS APPROVAL.

A LOAD DURATION INCREASE IS USED IN DESIGN OF ANCHORS INTO WOOD ONLY.

MATERIALS INCLUDING BUT NOT LIMITED TO STEEL/METAL SCREWS, THAT COME INTO CONTACT WITH OTHER DISSIMILAR MATERIALS SHALL MEET THE REQUIREMENTS OF THE INTL. RESIDENTIAL CODE (IRC) AND INTL. BLDG. CODE (IBC) WITH TEXAS REVISIONS.

THIS SYSTEM IS RATED FOR LARGE & SMALL MISSILE IMPACT.
SHUTTERS ARE NOT REQUIRED.

INSTRUCTIONS:

USE CHARTS AS FOLLOWS.

STEP 1 DETERMINE DESIGN WIND LOAD REQUIREMENTS BASED ON WIND VELOCITY, BLDG. HEIGHT, WIND ZONE USING APPLICABLE ASCE 7 STANDARD.

STEP 2 SEE CHARTS ON SHEETS 2 FOR DESIGN LOAD CAPACITY OF DESIRED GLASS SIZE.

STEP 3 CHECK MULLION CAPACITY FOR A GIVEN SPACING AND HEIGHT USING CHARTS ON SHEETS 3 & 4 FOR STOREFRONT MULLION AND SHEETS 7 & 8 FOR DOOR MULLION
THE CAPACITY SHOULD EXCEED THE DESIGN LOAD.

STEP 4 USING CHART ON SHEETS 5 & 6 SELECT ANCHOR OPTION WITH DESIGN RATING MORE THAN DESIGN LOAD SPECIFIED IN STEP 1 ABOVE.

STEP 5 THE LOWEST VALUE RESULTING FROM STEPS 2, 3 AND 4 SHALL APPLY TO ENTIRE SYSTEM.

INSULATING LAMINATED GLASS
LARGE MISSILE IMPACT

STATE OF TEXAS
JAVAD AHMAD
106516
LICENSED
PROFESSIONAL ENGINEER
Date & Time: 02/17/2014 12:45

AL-FAROOQ CORPORATION
ENGINEERS & PRODUCT DEVELOPMENT
1235 S.W. 87 AVE
MIAMI, FLORIDA 33174
TEL. (305) 264-8100 FAX. (305) 262-6978
STORE\W14-36YKK

YKK AP AMERICA INC.
1229 HIGHWAY 441 BYPASS
DUBLIN, GEORGIA 31021
TEL.(478) 277-1955 FAX(478) 277-1978

YHS-50 FI ALUM FLUSH GLAZE STOREFRONT SYS. (L.M.I.)

revisions:			
no	date	by	description

date: 09-30-14
scale: 1/2"=1'-0"
dr. by: HAMID
chk. by:

drawing no.
W14-36

GLASS LOAD CAPACITY – PSF		
NOMINAL DIMS.		INSUL. LAM. GLASS
D.L.O. WIDTH	D.L.O. HEIGHT	EXT.(+) & INT.(–)
24"	79"	70.0
30"		70.0
36"		70.0
42"		70.0
48"		70.0
54"		70.0
60"		70.0
66"		70.0
72"		70.0
24"	85"	70.0
30"		70.0
36"		70.0
42"		70.0
48"		70.0
54"		70.0
60"		70.0
66"		70.0
24"	91"	70.0
30"		70.0
36"		70.0
42"		70.0
48"		70.0
54"		70.0
60"		70.0
24"	97"	70.0
30"		70.0
36"		70.0
42"		70.0
48"		70.0
54"		70.0
60"		70.0
24"	103"	70.0
30"		70.0
36"		70.0
42"		70.0
48"		70.0
54"		70.0
24"	109"	70.0
30"		70.0
36"		70.0
42"		70.0
48"		70.0
54"		70.0
24"	115"	70.0
30"		70.0
36"		70.0
42"		70.0
48"		70.0

NOTE:
GLASS CAPACITIES ON THIS SHEET ARE BASED ON ASTM E1300–09 (3 SEC. GUSTS).

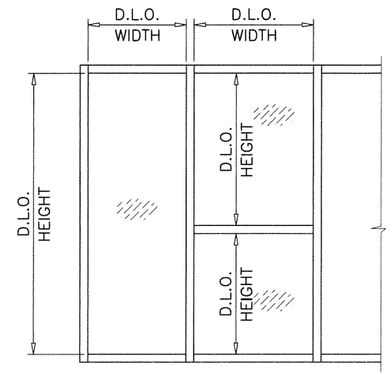

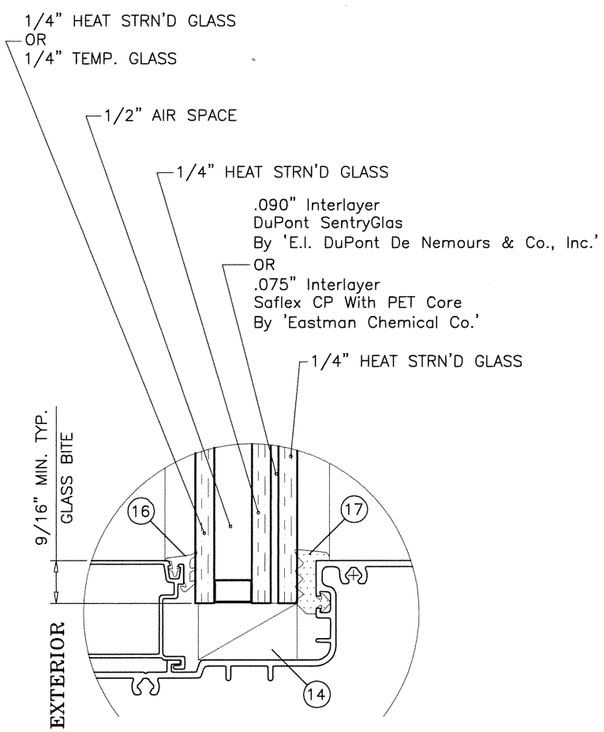

1–5/16" THICK NOMINAL

GLAZING DETAIL

1/2" AIR SPACE CONSISTING OF:

SPACER:
ALUMINUM BOX SPACER AROUND THE PERIMETER OF THE GLASS.

PRIMARY SEALANT:
TYPE PIB–29 MANUFACTURED BY ADCO.

SECONDARY SEALANT:
TYPE GE–3723 A&B TWO PART SILICONE MANUFACTURED BY GE.

DRY GLAZED

STATE OF TEXAS
JAVAD AHMAD
106516
LICENSED
PROFESSIONAL ENGINEER
Date & Time: 02/17/2015 11:12:45

AL-FAROOQ CORPORATION
ENGINEERS & PRODUCT DEVELOPMENT
1235 S.W. 87 AVE
MIAMI, FLORIDA 33174
TEL. (305) 264-8100 FAX. (305) 262-6978

STORE\W14–36YKK

YHS–50 FI ALUM FLUSH GLAZE STOREFRONT SYS. (L.M.I.)

YKK AP AMERICA INC.
1229 HIGHWAY 441 BYPASS
DUBLIN, GEORGIA 31021
TEL.(478) 277–1955 FAX(478) 277–1978

revisions:			
no	date	by	description

date: 09–30–14
scale: 1/2" = 1"
dr. by: HAMID
chk. by:

drawing no.
W14–36

GLASS DESIGN LOAD CAPACITY – PSF			
NOMINAL DIMS.		GLASS TYPE 'A'	GLASS TYPE 'B' & 'C'
D.L.O. WIDTH	D.L.O. HEIGHT	EXT. (+) INT. (–)	EXT. (+) INT. (–)
36"	60"	70.0	50.0
39"		70.0	50.0
42"		70.0	50.0
45"		70.0	50.0
48"		70.0	50.0
51"		70.0	50.0
54"		70.0	50.0
57–1/2		70.0	50.0
60"		70.0	50.0
63"		70.0	50.0
66"		70.0	50.0
69"		70.0	50.0
72"		70.0	50.0
36"	66"	70.0	50.0
39"		70.0	50.0
42"		70.0	50.0
45"		70.0	50.0
48"		70.0	50.0
51"		70.0	50.0
54"		70.0	50.0
57–1/2		70.0	50.0
60"		70.0	50.0
63"		70.0	50.0
66"		70.0	50.0
69"		70.0	50.0
72"		70.0	–
36"	72"	70.0	50.0
39"		70.0	50.0
42"		70.0	50.0
45"		70.0	50.0
48"		70.0	50.0
51"		70.0	50.0
54"		70.0	50.0
57–1/2		70.0	50.0
60"		70.0	50.0
63"		70.0	50.0
66"		70.0	–
69"		70.0	–
72"		70.0	–
36"	78"	70.0	50.0
39"		70.0	50.0
42"		70.0	50.0
45"		70.0	50.0
48"		70.0	50.0
51"		70.0	50.0
54"		70.0	50.0
57–1/2		70.0	50.0
60"		70.0	–
63"		70.0	–
66"		70.0	–
69"		70.0	–
72"		70.0	–

GLASS DESIGN LOAD CAPACITY – PSF			
NOMINAL DIMS.		GLASS TYPE 'A'	GLASS TYPE 'B' & 'C'
D.L.O. WIDTH	D.L.O. HEIGHT	EXT. (+) INT. (–)	EXT. (+) INT. (–)
36"	84"	70.0	50.0
39"		70.0	50.0
42"		70.0	50.0
45"		70.0	50.0
48"		70.0	50.0
51"		70.0	50.0
54"		70.0	50.0
57–1/2		70.0	–
60"		70.0	–
63"		70.0	–
66"		70.0	–
69"		70.0	–
36"	90"	70.0	50.0
39"		70.0	50.0
42"		70.0	50.0
45"		70.0	50.0
48"		70.0	50.0
51"		70.0	50.0
54"		70.0	–
57–1/2		70.0	–
60"		70.0	–
63"		70.0	–
36"	96"	70.0	50.0
39"		70.0	50.0
42"		70.0	50.0
45"		70.0	50.0
48"		70.0	50.0
51"		70.0	–
54"		70.0	–
57–1/2		70.0	–
60"		70.0	–
36"	102–3/8"	70.0	50.0
39"		70.0	50.0
42"		70.0	50.0
45"		70.0	50.0
48"		70.0	–
51"		70.0	–
54"		70.0	–
57–1/2		70.0	–
36"	108"	70.0	50.0
39"		70.0	50.0
42"		70.0	50.0
45"		70.0	–
48"		70.0	–
51"		70.0	–
54"		70.0	–

GLASS DESIGN LOAD CAPACITY – PSF			
NOMINAL DIMS.		GLASS TYPE 'A'	GLASS TYPE 'B' & 'C'
D.L.O. WIDTH	D.L.O. HEIGHT	EXT. (+) INT. (–)	EXT. (+) INT. (–)
36"	114"	70.0	50.0
39"		70.0	50.0
42"		70.0	–
45"		70.0	–
48"		70.0	–
51"		70.0	–
36"	120"	70.0	50.0
39"		70.0	–
42"		70.0	–
45"		70.0	–
48"		70.0	–

1/2" AIR SPACE CONSISTING OF:

SPACER:
ALUMINUM BOX SPACER AROUND THE PERIMETER OF THE GLASS.

PRIMARY SEALANT:
TYPE PIB–29 MANUFACTURED BY ADCO.

SECONDARY SEALANT:
TYPE GE–3723 A&B TWO PART SILICONE MANUFACTURED BY GE.

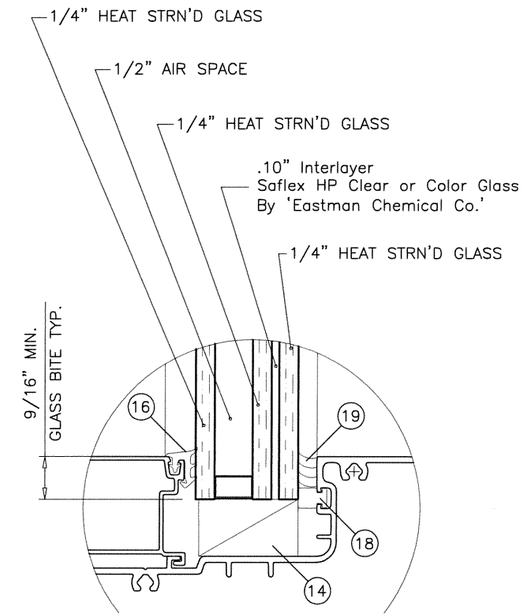

GLASS TYPE 'A'

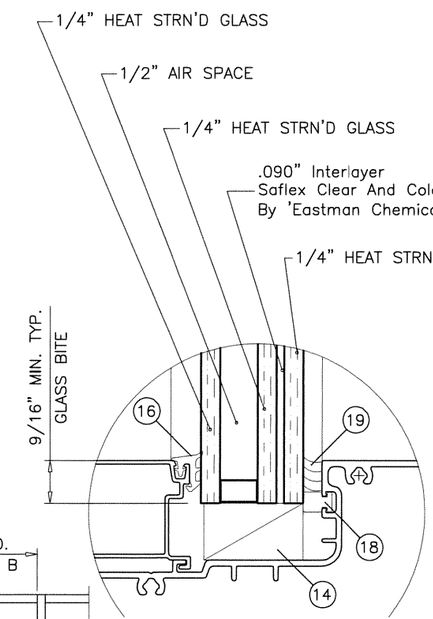

GLASS TYPE 'B'

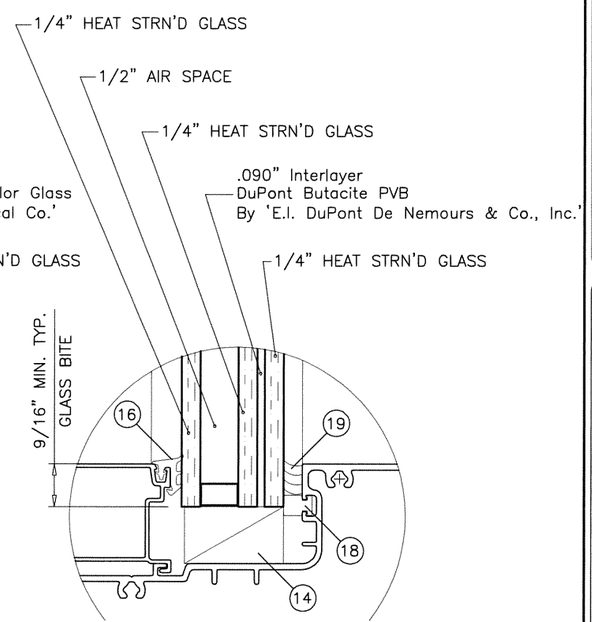

GLASS TYPE 'C'

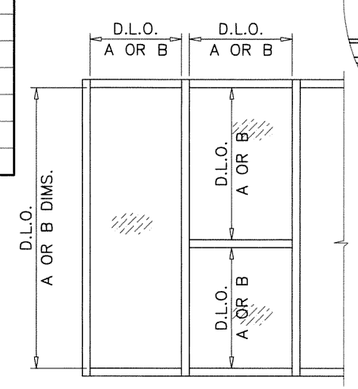

NOTE:
GLASS CAPACITIES ON THIS SHEET ARE BASED ON ASTM E1300–09 (3 SEC. GUSTS).

WET GLAZED

STATE OF TEXAS
JAVAD AHMAD
106516
LICENSED
PROFESSIONAL ENGINEER
Date & Time: 02/17/2015 11:12:45

AL-FAROOQ CORPORATION
ENGINEERS & PRODUCT DEVELOPMENT
1235 S.W. 87 AVE
MIAMI, FLORIDA 33174
TEL. (305) 264-8100 FAX. (305) 262-6978
STORE\W14–36YKK

YKK AP AMERICA INC.
1229 HIGHWAY 441 BYPASS
DUBLIN, GEORGIA 31021
TEL.(478) 277–1955 FAX(478) 277–1978

YHS–50 FI ALUM FLUSH GLAZE STOREFRONT SYS. (L.M.I.)

revisions:

no	date	by	description

date: 09–30–14
scale: 1/2" = 1"
dr. by: HAMID
chk. by:

drawing no.
W14–36

sheet 2.1 of 12

DESIGN LOAD CAPACITY – PSF			
NOMINAL DIMS.		STD. JAMB	STD. MULLION
WIDTH (W)	FRAME HEIGHT	EXT.(+)/INT.(–)	EXT.(+)/INT.(–)
30"	72"	50.0	50.0
33"		50.0	50.0
36"		50.0	50.0
39"		50.0	50.0
42"		50.0	50.0
45"		50.0	50.0
48"		50.0	50.0
51"		50.0	50.0
54"		50.0	50.0
57"		50.0	50.0
60"		50.0	50.0
63'		50.0	50.0
66"		50.0	50.0
69"		50.0	50.0
72"		50.0	50.0
30"	78"	50.0	50.0
33"		50.0	50.0
36"		50.0	50.0
39"		50.0	50.0
42"		50.0	50.0
45"		50.0	50.0
48"		50.0	50.0
51"		50.0	50.0
54"		50.0	50.0
57"		50.0	50.0
60"		50.0	50.0
63'		50.0	50.0
66"		50.0	50.0
69"		50.0	50.0
30"	84"	50.0	50.0
33"		50.0	50.0
36"		50.0	50.0
39"		50.0	50.0
42"		50.0	50.0
45"		50.0	50.0
48"		50.0	50.0
51"		50.0	50.0
54"		50.0	50.0
57"		50.0	50.0
60"		50.0	50.0
63'		50.0	50.0
30"	90"	50.0	50.0
33"		50.0	50.0
36"		50.0	50.0
39"		50.0	50.0
42"		50.0	50.0
45"		50.0	50.0
48"		50.0	50.0
51"		50.0	50.0
54"		50.0	50.0
57"		50.0	50.0
60"		50.0	50.0

DESIGN LOAD CAPACITY – PSF			
NOMINAL DIMS.		STD. JAMB	STD. MULLION
WIDTH (W)	FRAME HEIGHT	EXT.(+)/INT.(–)	EXT.(+)/INT.(–)
30"	96"	50.0	50.0
33"		50.0	50.0
36"		50.0	50.0
39"		50.0	50.0
42"		50.0	50.0
45"		50.0	50.0
48"		50.0	50.0
51"		49.5	50.0
54"		46.7	50.0
30"	102"	50.0	50.0
33"		50.0	50.0
36"		50.0	50.0
39"		50.0	50.0
42"		50.0	50.0
45"		49.7	50.0
48"		46.6	50.0
51"		43.8	50.0
30"	108"	50.0	50.0
33"		50.0	50.0
36"		50.0	50.0
39"		50.0	50.0
42"		47.5	50.0
45"		44.3	49.0
48"		41.5	45.9
30"	114"	50.0	50.0
33"		50.0	50.0
36"		49.7	50.0
39"		45.9	48.0
42"		42.6	44.6
45"		39.8	41.6
30"	120"	50.0	50.0
33"		48.9	48.7
36"		44.8	44.6
39"		41.4	41.2
42"		38.4	38.2
45"		35.9	35.7

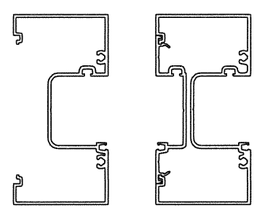

STANDARD JAMB STANDARD MULLION

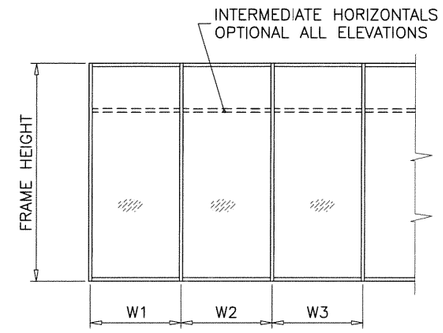

WIDTH (W) = W1 (JAMB)

$$\text{WIDTH (W)} = \frac{W2 + W3}{2} \quad \text{(MULLION)}$$

MULLIONS

STATE OF TEXAS
JAVAD AHMAD
106516
LICENSED PROFESSIONAL ENGINEER
Date & Time: 02/17/2012 2:45

AL-FAROOQ CORPORATION
ENGINEERS & PRODUCT DEVELOPMENT
1235 S.W. 87 AVE
MIAMI, FLORIDA 33174
TEL. (305) 264-8100 FAX. (305) 262-6978

STORE\W14-36YKK

YHS-50 FI ALUM FLUSH GLAZE STOREFRONT SYS. (L.M.I.)

YKK AP AMERICA INC.
1229 HIGHWAY 441 BYPASS
DUBLIN, GEORGIA 31021
TEL.(478) 277-1955 FAX(478) 277-1978

revisions:			
no	date	by	description

date: 09-30-14
scale: –
dr. by: HAMID
chk. by:

drawing no. W14-36

DESIGN LOAD CAPACITY – PSF					
NOMINAL DIMS.		H.D. JAMB #1	H.D. JAMB #2	H.D. MULLION	EXP. MULLION
WIDTH (W)	FRAME HEIGHT	EXT.(+)/INT.(–)	EXT.(+)/INT.(–)	EXT.(+)/INT.(–)	EXT.(+)/INT.(–)
30"	90"	70.0	70.0	70.0	70.0
33"		70.0	70.0	70.0	70.0
36"		70.0	70.0	70.0	70.0
39"		70.0	70.0	70.0	70.0
42"		70.0	70.0	70.0	70.0
45"		70.0	70.0	70.0	70.0
48"		70.0	70.0	70.0	70.0
51"		70.0	70.0	70.0	70.0
54"		70.0	70.0	70.0	70.0
57"		70.0	70.0	70.0	70.0
60"		70.0	70.0	70.0	70.0
63'		70.0	70.0	70.0	70.0
66"		70.0	70.0	70.0	70.0
69"		70.0	70.0	70.0	70.0
72"		70.0	70.0	70.0	70.0
30"	96"	70.0	70.0	70.0	70.0
33"		70.0	70.0	70.0	70.0
36"		70.0	70.0	70.0	70.0
39"		70.0	70.0	70.0	70.0
42"		70.0	70.0	70.0	70.0
45"		70.0	70.0	70.0	70.0
48"		70.0	70.0	70.0	70.0
51"		70.0	70.0	70.0	70.0
54"		70.0	70.0	70.0	70.0
57"		70.0	70.0	70.0	70.0
60"		70.0	70.0	70.0	70.0
63'		70.0	70.0	70.0	70.0
66"		70.0	70.0	70.0	70.0
30"	102"	70.0	70.0	70.0	70.0
33"		70.0	70.0	70.0	70.0
36"		70.0	70.0	70.0	70.0
39"		70.0	70.0	70.0	70.0
42"		70.0	70.0	70.0	70.0
45"		70.0	70.0	70.0	70.0
48"		70.0	70.0	70.0	70.0
51"		70.0	70.0	70.0	70.0
54"		70.0	70.0	70.0	70.0
57"		70.0	70.0	70.0	70.0
60"		70.0	70.0	70.0	70.0
63'		70.0	70.0	70.0	70.0
30"	108"	70.0	70.0	70.0	70.0
33"		70.0	70.0	70.0	70.0
36"		70.0	70.0	70.0	70.0
39"		70.0	70.0	70.0	70.0
42"		70.0	70.0	70.0	70.0
45"		70.0	70.0	70.0	70.0
48"		70.0	70.0	70.0	70.0
51"		70.0	70.0	70.0	70.0
54"		70.0	70.0	70.0	70.0
57"		70.0	70.0	70.0	70.0
60"		70.0	70.0	70.0	68.8

DESIGN LOAD CAPACITY – PSF					
NOMINAL DIMS.		H.D. JAMB #1	H.D. JAMB #2	H.D. MULLION	EXP. MULLION
WIDTH (W)	FRAME HEIGHT	EXT.(+)/INT.(–)	EXT.(+)/INT.(–)	EXT.(+)/INT.(–)	EXT.(+)/INT.(–)
30"	114"	70.0	70.0	70.0	70.0
33"		70.0	70.0	70.0	70.0
36"		70.0	70.0	70.0	70.0
39"		70.0	70.0	70.0	70.0
42"		70.0	70.0	70.0	70.0
45"		70.0	70.0	70.0	70.0
48"		70.0	70.0	70.0	70.0
51"		70.0	70.0	70.0	70.0
54"		70.0	69.4	66.6	68.7
57"		70.0	65.7	63.1	65.0
30"	120"	70.0	70.0	70.0	70.0
33"		70.0	70.0	70.0	70.0
36"		70.0	70.0	70.0	70.0
39"		70.0	70.0	70.0	70.0
42"		70.0	70.0	70.0	70.0
45"		70.0	70.0	68.6	70.0
48"		70.0	66.9	64.3	69.7
51"		70.0	63.0	60.5	65.6
54"		70.0	59.5	57.1	62.0

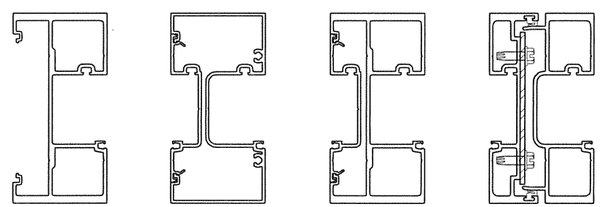

H.D. JAMB #1 | H.D. JAMB #2 | H.D. MULLION | EXPANSION MULLION

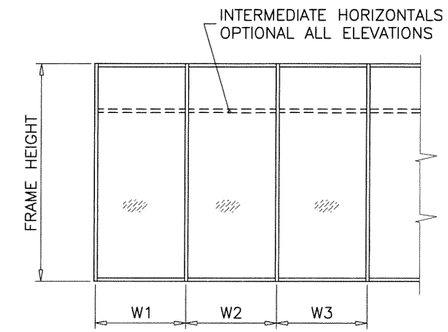

WIDTH (W) = W1 (JAMB)

$$\text{WIDTH (W)} = \frac{W2 + W3}{2} \quad \text{(MULLION)}$$

MULLIONS

STATE OF TEXAS
JAVAD AHMAD
106516
LICENSED PROFESSIONAL ENGINEER
Date & Time: 02/17/2017 12:45

AL-FAROOQ CORPORATION
ENGINEERS & PRODUCT DEVELOPMENT
1235 S.W. 87 AVE
MIAMI, FLORIDA 33174
TEL. (305) 264-8100 FAX. (305) 262-6978
STORE\W14-36YKK

YHS-50 FI ALUM FLUSH GLAZE STOREFRONT SYS. (L.M.I.)

YKK AP AMERICA INC.
1229 HIGHWAY 441 BYPASS
DUBLIN, GEORGIA 31021
TEL.(478) 277-1955 FAX(478) 277-1978

revisions:			
no	date	by	description

date: 09-30-14
scale: –
dr. by: HAMID
chk. by:

drawing no. W14-36

ANCHOR LOAD CAPACITY – PSF
EXT.(+) & INT.(–)

NOMINAL DIMS.		ANCHORS TYPE 'A'		ANCHORS TYPE 'B'
WIDTH (W)	FRAME HEIGHT	A2	A3	B2
30"	72"	70.0	70.0	70.0
33"		70.0	70.0	70.0
36"		70.0	70.0	70.0
39"		70.0	70.0	70.0
42"		70.0	70.0	70.0
45"		70.0	70.0	70.0
48"		70.0	70.0	70.0
51"		70.0	70.0	70.0
54"		70.0	70.0	70.0
57"		70.0	70.0	70.0
60"		70.0	70.0	70.0
63"		70.0	70.0	70.0
66"		70.0	70.0	70.0
69"		68.2	70.0	70.0
72"		65.3	70.0	70.0
30"	78"	70.0	70.0	70.0
33"		70.0	70.0	70.0
36"		70.0	70.0	70.0
39"		70.0	70.0	70.0
42"		70.0	70.0	70.0
45"		70.0	70.0	70.0
48"		70.0	70.0	70.0
51"		70.0	70.0	70.0
54"		70.0	70.0	70.0
57"		70.0	70.0	70.0
60"		70.0	70.0	70.0
63"		68.9	70.0	70.0
66"		65.8	70.0	70.0
69"		62.9	70.0	70.0
72"		60.3	70.0	70.0
30"	84"	70.0	70.0	70.0
33"		70.0	70.0	70.0
36"		70.0	70.0	70.0
39"		70.0	70.0	70.0
42"		70.0	70.0	70.0
45"		70.0	70.0	70.0
48"		70.0	70.0	70.0
51"		70.0	70.0	70.0
54"		70.0	70.0	70.0
57"		70.0	70.0	70.0
60"		67.2	70.0	70.0
63"		64.0	70.0	70.0
66"		61.1	70.0	70.0
69"		58.4	70.0	70.0
72"		56.0	70.0	70.0

ANCHOR LOAD CAPACITY – PSF
EXT.(+) & INT.(–)

NOMINAL DIMS.		ANCHORS TYPE 'A'		ANCHORS TYPE 'B'
WIDTH (W)	FRAME HEIGHT	A2	A3	B2
30"	90"	70.0	70.0	70.0
33"		70.0	70.0	70.0
36"		70.0	70.0	70.0
39"		70.0	70.0	70.0
42"		70.0	70.0	70.0
45"		70.0	70.0	70.0
48"		70.0	70.0	70.0
51"		70.0	70.0	70.0
54"		69.7	70.0	70.0
57"		66.0	70.0	70.0
60"		62.7	70.0	70.0
63"		59.7	70.0	70.0
66"		57.0	70.0	70.0
69"		54.5	70.0	70.0
72"		52.3	70.0	70.0
30"	96"	70.0	70.0	70.0
33"		70.0	70.0	70.0
36"		70.0	70.0	70.0
39"		70.0	70.0	70.0
42"		70.0	70.0	70.0
45"		70.0	70.0	70.0
48"		70.0	70.0	70.0
51"		69.2	70.0	70.0
54"		65.3	70.0	70.0
57"		61.9	70.0	70.0
60"		58.8	70.0	70.0
63"		56.0	70.0	70.0
66"		53.5	70.0	70.0
30"	102"	70.0	70.0	70.0
33"		70.0	70.0	70.0
36"		70.0	70.0	70.0
39"		70.0	70.0	70.0
42"		70.0	70.0	70.0
45"		70.0	70.0	70.0
48"		69.2	70.0	70.0
51"		65.1	70.0	70.0
54"		61.5	70.0	70.0
57"		58.3	70.0	70.0
60"		55.3	70.0	70.0
63"		52.7	70.0	70.0

ANCHOR LOAD CAPACITY – PSF
EXT.(+) & INT.(–)

NOMINAL DIMS.		ANCHORS TYPE 'A'		ANCHORS TYPE 'B'
WIDTH (W)	FRAME HEIGHT	A2	A3	B2
30"	108"	70.0	70.0	70.0
33"		70.0	70.0	70.0
36"		70.0	70.0	70.0
39"		70.0	70.0	70.0
42"		70.0	70.0	70.0
45"		69.7	70.0	70.0
48"		65.3	70.0	70.0
51"		61.5	70.0	70.0
54"		58.1	70.0	70.0
57"		55.0	70.0	70.0
60"		52.3	70.0	70.0
30"	114"	70.0	70.0	70.0
33"		70.0	70.0	70.0
36"		70.0	70.0	70.0
39"		70.0	70.0	70.0
42"		70.0	70.0	70.0
45"		66.0	70.0	70.0
48"		61.9	70.0	70.0
51"		58.3	70.0	70.0
54"		55.0	70.0	70.0
57"		52.1	70.0	70.0
30"	120"	70.0	70.0	70.0
33"		70.0	70.0	70.0
36"		70.0	70.0	70.0
39"		70.0	70.0	70.0
42"		67.2	70.0	70.0
45"		62.7	70.0	70.0
48"		58.8	70.0	70.0
51"		55.3	70.0	70.0
54"		52.3	70.0	70.0

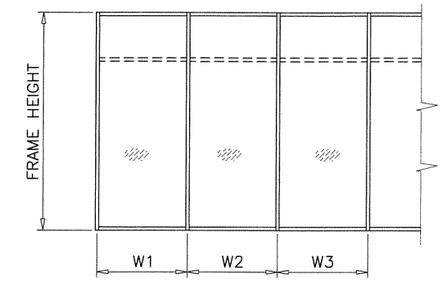

WIDTH (W) = W1 (JAMB)

$$\text{WIDTH (W)} = \frac{W2 + W3}{2} \quad \text{(MULLION)}$$

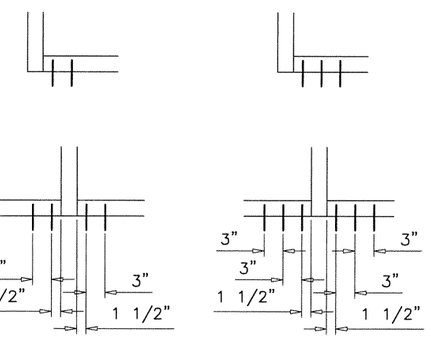

A2, B2, A3

ANCHORS TYPES: SEE SHEET 9.1 FOR DESCRIPTION

A2 = (2) ANCHORS TYPE 'A' AT JAMB OR EACH SIDE OF MULLION
A3 = (3) ANCHORS TYPE 'A' AT JAMB OR EACH SIDE OF MULLION

B2 = (2) ANCHORS TYPE 'B' AT JAMB OR EACH SIDE OF MULLION

ALL OTHER ANCHORS TO BE SPACED AS PER ELEVATION.

STATE OF TEXAS
JAVAD AHMAD
106516
LICENSED
PROFESSIONAL ENGINEER
Date & Time: 02/17/2015 12:45

ANCHORS

AL-FAROOQ CORPORATION
ENGINEERS & PRODUCT DEVELOPMENT
1235 S.W. 87 AVE
MIAMI, FLORIDA 33174
TEL. (305) 264-8100 FAX. (305) 262-6978
STORE\W14-36YKK

YHS-50 FI ALUM. FLUSH GLAZE STOREFRONT SYS. (L.M.I.)

YKK AP AMERICA INC.
1229 HIGHWAY 441 BYPASS
DUBLIN, GEORGIA 31021
TEL(478) 277-1955 FAX(478) 277-1978

revisions:			
no	date	by	description

date: 09-30-14
scale: –
dr. by: HAMID
chk. by:

drawing no. W14-36

ANCHOR LOAD CAPACITY – PSF
EXT.(+) & INT.(–)

NOMINAL DIMS.		ANCHORS TYPE 'C' & 'E'			ANCHORS TYPE 'D'	
WIDTH (W)	FRAME HEIGHT	C2/E2	C3/E3	C4/E4	D2	D3
30"	72"	70.0	70.0	70.0	70.0	70.0
33"		70.0	70.0	70.0	70.0	70.0
36"		70.0	70.0	70.0	70.0	70.0
39"		70.0	70.0	70.0	70.0	70.0
42"		70.0	70.0	70.0	70.0	70.0
45"		70.0	70.0	70.0	70.0	70.0
48"		70.0	70.0	70.0	70.0	70.0
51"		67.8	70.0	70.0	70.0	70.0
54"		64.0	70.0	70.0	70.0	70.0
57"		60.6	70.0	70.0	70.0	70.0
60"		57.6	70.0	70.0	70.0	70.0
63"		54.9	70.0	70.0	70.0	70.0
66"		52.4	70.0	70.0	70.0	70.0
69"		50.1	70.0	70.0	70.0	70.0
72"		48.0	70.0	70.0	68.0	70.0
30"	78"	70.0	70.0	70.0	70.0	70.0
33"		70.0	70.0	70.0	70.0	70.0
36"		70.0	70.0	70.0	70.0	70.0
39"		70.0	70.0	70.0	70.0	70.0
42"		70.0	70.0	70.0	70.0	70.0
45"		70.0	70.0	70.0	70.0	70.0
48"		66.5	70.0	70.0	70.0	70.0
51"		62.6	70.0	70.0	70.0	70.0
54"		59.1	70.0	70.0	70.0	70.0
57"		56.0	70.0	70.0	70.0	70.0
60"		53.2	70.0	70.0	70.0	70.0
63"		50.6	70.0	70.0	70.0	70.0
66"		48.3	70.0	70.0	68.5	70.0
69"		46.2	69.4	70.0	65.5	70.0
72"		44.3	66.5	70.0	62.8	70.0
30"	84"	70.0	70.0	70.0	70.0	70.0
33"		70.0	70.0	70.0	70.0	70.0
36"		70.0	70.0	70.0	70.0	70.0
39"		70.0	70.0	70.0	70.0	70.0
42"		70.0	70.0	70.0	70.0	70.0
45"		65.8	70.0	70.0	70.0	70.0
48"		61.7	70.0	70.0	70.0	70.0
51"		58.1	70.0	70.0	70.0	70.0
54"		54.9	70.0	70.0	70.0	70.0
57"		52.0	70.0	70.0	70.0	70.0
60"		49.4	70.0	70.0	69.9	70.0
63"		47.0	70.0	70.0	66.6	70.0
66"		44.9	67.3	70.0	63.6	70.0
69"		42.9	64.4	70.0	60.8	70.0
72"		41.1	61.7	70.0	58.3	70.0

ANCHOR LOAD CAPACITY – PSF
EXT.(+) & INT.(–)

NOMINAL DIMS.		ANCHORS TYPE 'C' & 'E'			ANCHORS TYPE 'D'	
WIDTH (W)	FRAME HEIGHT	C2/E2	C3/E3	C4/E4	D2	D3
30"	90"	70.0	70.0	70.0	70.0	70.0
33"		70.0	70.0	70.0	70.0	70.0
36"		70.0	70.0	70.0	70.0	70.0
39"		70.0	70.0	70.0	70.0	70.0
42"		65.8	70.0	70.0	70.0	70.0
45"		61.4	70.0	70.0	70.0	70.0
48"		57.6	70.0	70.0	70.0	70.0
51"		54.2	70.0	70.0	70.0	70.0
54"		51.2	70.0	70.0	70.0	70.0
57"		48.5	70.0	70.0	68.7	70.0
60"		46.1	69.1	70.0	65.3	70.0
63"		43.9	65.8	70.0	62.2	70.0
66"		41.9	62.8	70.0	59.3	70.0
69"		40.1	60.1	70.0	56.8	70.0
72"		38.4	57.6	70.0	54.4	70.0
30"	96"	70.0	70.0	70.0	70.0	70.0
33"		70.0	70.0	70.0	70.0	70.0
36"		70.0	70.0	70.0	70.0	70.0
39"		66.5	70.0	70.0	70.0	70.0
42"		61.7	70.0	70.0	70.0	70.0
45"		57.6	70.0	70.0	70.0	70.0
48"		54.0	70.0	70.0	70.0	70.0
51"		50.8	70.0	70.0	70.0	70.0
54"		48.0	70.0	70.0	68.0	70.0
57"		45.5	68.2	70.0	64.4	70.0
60"		43.2	64.8	70.0	61.2	70.0
63"		41.1	61.7	70.0	58.3	70.0
66"		39.3	58.9	70.0	55.6	70.0
30"	102"	70.0	70.0	70.0	70.0	70.0
33"		70.0	70.0	70.0	70.0	70.0
36"		67.8	70.0	70.0	70.0	70.0
39"		62.6	70.0	70.0	70.0	70.0
42"		58.1	70.0	70.0	70.0	70.0
45"		54.2	70.0	70.0	70.0	70.0
48"		50.8	70.0	70.0	70.0	70.0
51"		47.8	70.0	70.0	67.8	70.0
54"		45.2	67.8	70.0	64.0	70.0
57"		42.8	64.2	70.0	60.6	70.0
60"		40.7	61.0	70.0	57.6	70.0
63"		38.7	58.1	70.0	54.9	70.0

ANCHOR LOAD CAPACITY – PSF
EXT.(+) & INT.(–)

NOMINAL DIMS.		ANCHORS TYPE 'C' & 'E'			ANCHORS TYPE 'D'	
WIDTH (W)	FRAME HEIGHT	C2/E2	C3/E3	C4/E4	D2	D3
30"	108"	70.0	70.0	70.0	70.0	70.0
33"		69.8	70.0	70.0	70.0	70.0
36"		64.0	70.0	70.0	70.0	70.0
39"		59.1	70.0	70.0	70.0	70.0
42"		54.9	70.0	70.0	70.0	70.0
45"		51.2	70.0	70.0	70.0	70.0
48"		48.0	70.0	70.0	68.0	70.0
51"		45.2	67.8	70.0	64.0	70.0
54"		42.7	64.0	70.0	60.4	70.0
57"		40.4	60.6	70.0	57.3	70.0
60"		38.4	57.6	70.0	54.4	70.0
30"	114"	70.0	70.0	70.0	70.0	70.0
33"		66.1	70.0	70.0	70.0	70.0
36"		60.6	70.0	70.0	70.0	70.0
39"		56.0	70.0	70.0	70.0	70.0
42"		52.0	70.0	70.0	70.0	70.0
45"		48.5	70.0	70.0	68.7	70.0
48"		45.5	68.2	70.0	64.4	70.0
51"		42.8	64.2	70.0	60.6	70.0
54"		40.4	60.6	70.0	57.3	70.0
57"		38.3	57.4	70.0	54.2	70.0
30"	120"	69.1	70.0	70.0	70.0	70.0
33"		62.8	70.0	70.0	70.0	70.0
36"		57.6	70.0	70.0	70.0	70.0
39"		53.2	70.0	70.0	70.0	70.0
42"		49.4	70.0	70.0	69.9	70.0
45"		46.1	69.1	70.0	65.3	70.0
48"		43.2	64.8	70.0	61.2	70.0
51"		40.7	61.0	70.0	57.6	70.0
54"		38.4	57.6	70.0	54.4	70.0

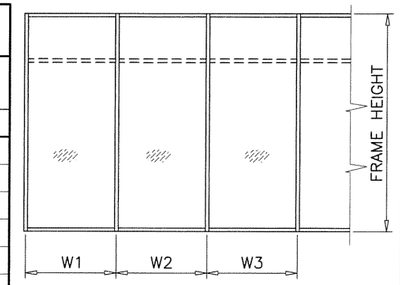

WIDTH (W) = W1 (JAMB)

WIDTH (W) = $\frac{W2 + W3}{2}$ (MULLION)

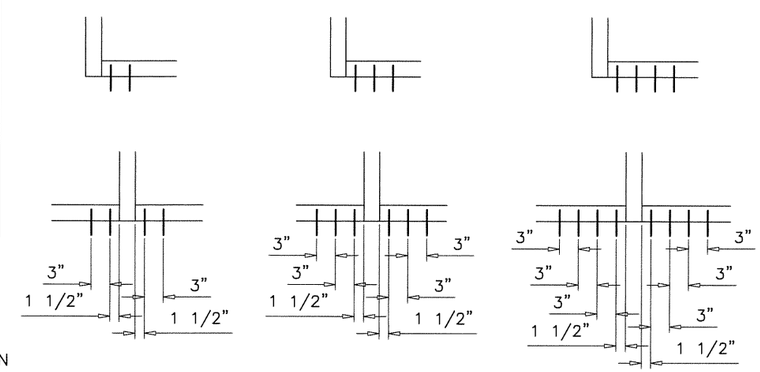

C2, D2, E2 C3, D3, E3 C4, E4

ANCHORS TYPES: SEE SHEET 9.1 FOR DESCRIPTION

C2 = (2) ANCHORS TYPE 'C' AT JAMB OR EACH SIDE OF MULLION
C3 = (3) ANCHORS TYPE 'C' AT JAMB OR EACH SIDE OF MULLION
C4 = (4) ANCHORS TYPE 'C' AT JAMB OR EACH SIDE OF MULLION

D2 = (2) ANCHORS TYPE 'D' AT JAMB OR EACH SIDE OF MULLION
D3 = (3) ANCHORS TYPE 'D' AT JAMB OR EACH SIDE OF MULLION

E2 = (2) ANCHORS TYPE 'E' AT JAMB OR EACH SIDE OF MULLION
E3 = (3) ANCHORS TYPE 'E' AT JAMB OR EACH SIDE OF MULLION
E4 = (4) ANCHORS TYPE 'E' AT JAMB OR EACH SIDE OF MULLION

ALL OTHER ANCHORS TO BE SPACED AS PER ELEVATION.

ANCHORS

STATE OF TEXAS
JAVAD AHMAD
106516
LICENSED
PROFESSIONAL ENGINEER
Date & Time: 02/17/2021 12:45

AL-FAROOQ CORPORATION
ENGINEERS & PRODUCT DEVELOPMENT
1235 S.W. 87 AVE
MIAMI, FLORIDA 33174
TEL. (305) 264-8100 FAX. (305) 262-6978
STORE\W14-36YKK

YKK AP AMERICA INC.
1229 HIGHWAY 441 BYPASS
DUBLIN, GEORGIA 31021
TEL(478) 277-1955 FAX(478) 277-1978

YHS-50 FI ALUM. FLUSH GLAZE STOREFRONT SYS. (L.M.I.)

revisions:

no	date	by	description

date: 09-30-14
scale: –
dr. by: HAMID
chk. by:

drawing no.
W14-36

sheet 6 of 12

DOOR MULLION LOAD CAPACITY		
NOMINAL DIMS.		LOADS – PSF
WIDTH (W)	FRAME HEIGHT	EXT.(+) & INT.(–)
24"	80"	70.0
30"		70.0
36"		70.0
42"		70.0
48"		70.0
54"		70.0
60"		70.0
24"	84"	70.0
30"		70.0
36"		70.0
42"		70.0
48"		70.0
54"		70.0
60"		70.0
24"	90"	70.0
30"		70.0
36"		70.0
42"		70.0
48"		70.0
54"		70.0
60"		70.0
24"	96"	70.0
30"		70.0
36"		70.0
42"		70.0
48"		70.0
54"		70.0
60"		70.0
24"	102"	70.0
30"		70.0
36"		70.0
42"		70.0
48"		70.0
54"		70.0
60"		70.0
24"	108"	70.0
30"		70.0
36"		70.0
42"		70.0
48"		70.0
54"		70.0
60"		70.0

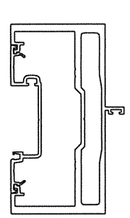

DOOR MULLION

ANCHOR TYPES	TOTAL NO. OF ANCHORS AT DOOR MULLION HEAD OR SILL
A	6
B	4
C & E	8
D	6

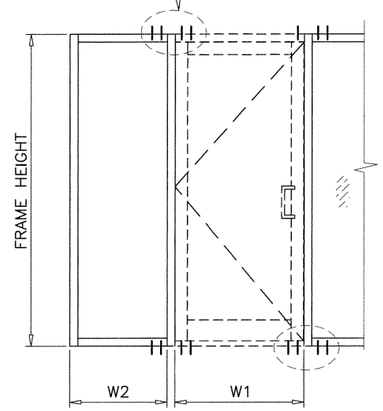

$$\text{WIDTH (W)} = \frac{W1 + W2}{2}$$

ANCHOR TYPES	TOTAL NO. OF ANCHORS AT DOOR MULLION HEAD OR SILL
A	6
B	4
C & E	8
D	6

YKK OUTSWING DOORS
SEE SEPARATE APPROVAL

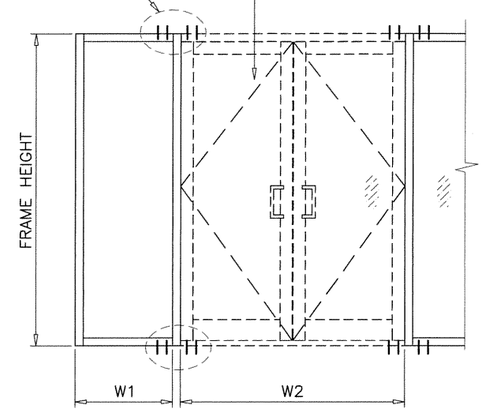

$$\text{WIDTH (W)} = \frac{W1}{2} + \frac{W2}{4}$$

ANCHOR TYPES	TOTAL NO. OF ANCHORS AT DOOR MULLION HEAD OR SILL
A	6
B	4
C & E	8
D	6

YKK OUTSWING DOORS
SEE SEPARATE APPROVAL

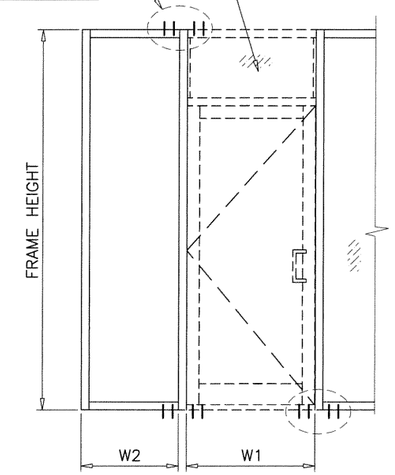

$$\text{WIDTH (W)} = \frac{W1 + W2}{2}$$

DOOR MULLION

STATE OF TEXAS
JAVAD AHMAD
106516
LICENSED
PROFESSIONAL ENGINEER
Date & Time: 02/17/2014 2:45

AL-FAROOQ CORPORATION
ENGINEERS & PRODUCT DEVELOPMENT
1235 S.W. 87 AVE
MIAMI, FLORIDA 33174
TEL. (305) 264-8100 FAX. (305) 262-6978

STORE\W14–36YKK

YHS–50 FI ALUM FLUSH GLAZE STOREFRONT SYS. (L.M.I.)

YKK AP AMERICA INC.
1229 HIGHWAY 441 BYPASS
DUBLIN, GEORGIA 31021
TEL.(478) 277–1955 FAX(478) 277–1978

revisions:			
no	date	by	description

date: 09–30–14
scale: –
dr. by: HAMID
chk. by:

drawing no.
W14–36

DOOR MULLION LOAD CAPACITY – PSF				
NOMINAL DIMS.				LOADS – PSF
FRAME HEIGHT INCHES	DOOR HEIGHT INCHES	WIDTH (W1) INCHES	WIDTH (W2) INCHES	EXT. (+) INT. (–)
96	84	72	30	70.0
			36	70.0
			42	70.0
			48	70.0
			54	70.0
			60	70.0
		84	30	70.0
			36	70.0
			42	70.0
			48	70.0
			54	70.0
			60	70.0
		96	30	70.0
			36	70.0
			42	70.0
			48	70.0
			54	70.0
			60	70.0
102	84	72	30	70.0
			36	70.0
			42	70.0
			48	70.0
			54	70.0
			60	70.0
		84	30	70.0
			36	70.0
			42	70.0
			48	70.0
			54	70.0
			60	70.0
		96	30	70.0
			36	70.0
			42	70.0
			48	70.0
108	84	72	30	70.0
			36	70.0
			42	70.0
			48	70.0
			54	70.0
			60	70.0
		84	30	70.0
			36	70.0
			42	70.0
			48	70.0
			54	70.0
		96	30	70.0
			36	70.0
			42	70.0

DOOR MULLION LOAD CAPACITY – PSF				
NOMINAL DIMS.				LOADS – PSF
FRAME HEIGHT INCHES	DOOR HEIGHT INCHES	WIDTH (W1) INCHES	WIDTH (W2) INCHES	EXT. (+) INT. (–)
102	90	72	30	70.0
			36	70.0
			42	70.0
			48	70.0
			54	70.0
			60	70.0
		84	30	70.0
			36	70.0
			42	70.0
			48	70.0
			54	70.0
			60	70.0
		96	30	70.0
			36	70.0
			42	70.0
			48	70.0
108	90	72	30	70.0
			36	70.0
			42	70.0
			48	70.0
			54	70.0
			60	70.0
		84	30	70.0
			36	70.0
			42	70.0
			48	70.0
			54	70.0
		96	30	70.0
			36	70.0
			42	70.0

DOOR MULLION LOAD CAPACITY – PSF				
NOMINAL DIMS.				LOADS – PSF
FRAME HEIGHT INCHES	DOOR HEIGHT INCHES	WIDTH (W1) INCHES	WIDTH (W2) INCHES	EXT. (+) INT. (–)
108	96	72	30	70.0
			36	70.0
			42	70.0
			48	70.0
			54	70.0
			60	70.0
		84	30	70.0
			36	70.0
			42	70.0
			48	70.0
			54	70.0
		96	30	70.0
			36	70.0
			42	70.0

ANCHOR TYPES	TOTAL NO. OF ANCHORS AT DOOR MULLION HEAD OR SILL
A	6
B	4
C & E	8
D	6

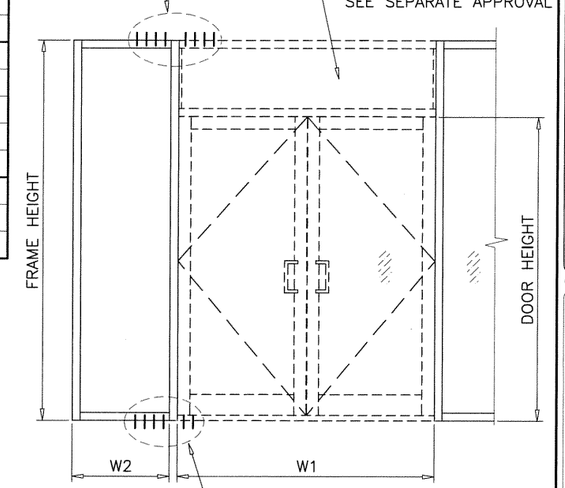

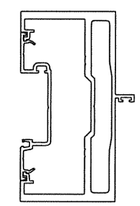

DOOR MULLION

DOOR MULLION

STATE OF TEXAS
JAVAD AHMAD
106516
Date & Time: 02/17/2015 11:12:45
LICENSED PROFESSIONAL ENGINEER

AL-FAROOQ CORPORATION
ENGINEERS & PRODUCT DEVELOPMENT
1235 S.W. 87 AVE
MIAMI, FLORIDA 33174
TEL. (305) 264-8100 FAX. (305) 262-6978

STORE\W14-36YKK

YHS-50 FI ALUM FLUSH GLAZE STOREFRONT SYS. (L.M.I.)

YKK AP AMERICA INC.
1229 HIGHWAY 441 BYPASS
DUBLIN, GEORGIA 31021
TEL.(478) 277-1955 FAX(478) 277-1978

revisions:			
no	date	by	description

date: 09-30-14
scale: –
dr. by: HAMID
chk. by:

drawing no.
W14-36

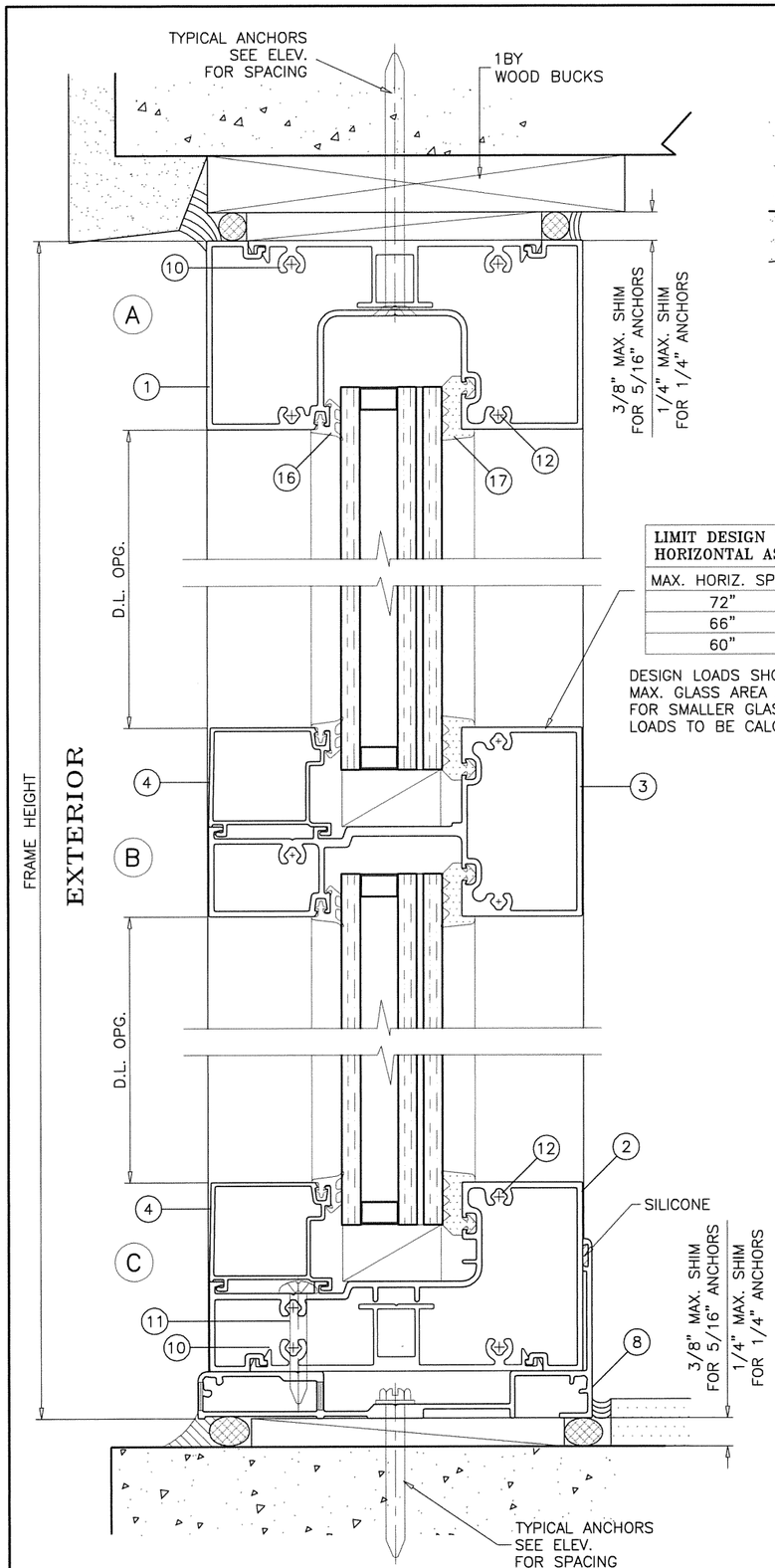

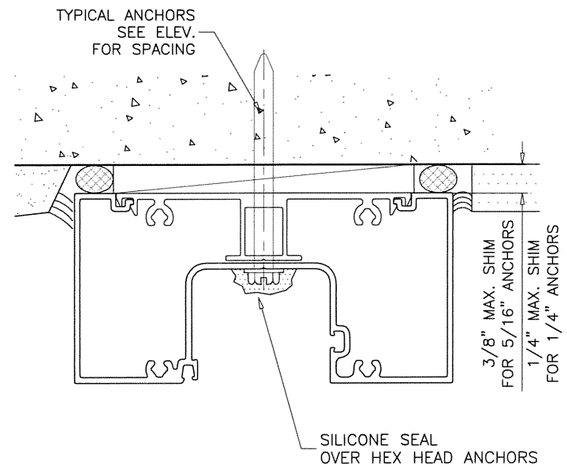

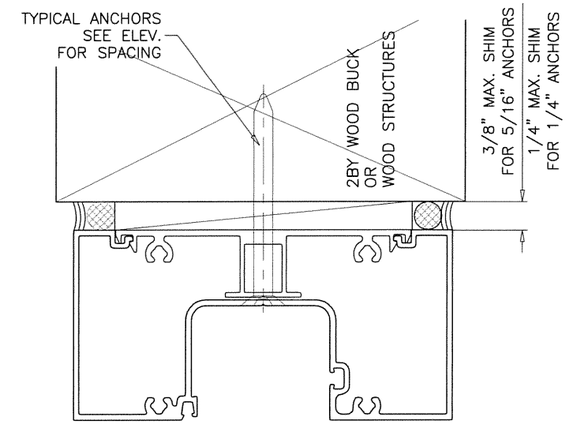

LIMIT DESIGN LOADS FOR HORIZONTAL AS FOLLOWS	
MAX. HORIZ. SPAN	MAX. DESIGN LOADS
72"	46 PSF
66"	60 PSF
60"	70 PSF

DESIGN LOADS SHOWN ABOVE ARE BASED ON MAX. GLASS AREA ABOVE HORIZONTAL.
FOR SMALLER GLASS ABOVE HORIZONTAL DESIGN LOADS TO BE CALCULATED SEPARATELY.

SEALANTS:

ALL FRAME CORNERS JOINTS AND INSTALLATION SCREWS AT SILL SEALED WITH SILICONE.

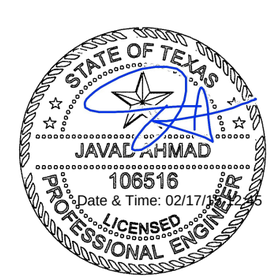

AL-FAROOQ CORPORATION
ENGINEERS & PRODUCT DEVELOPMENT
1235 S.W. 87 AVE
MIAMI, FLORIDA 33174
TEL. (305) 264-8100 FAX. (305) 262-6978
STORE\W14-36YKK

YHS-50 FI ALUM FLUSH GLAZE STOREFRONT SYS. (L.M.I.)

YKK AP AMERICA INC.
1229 HIGHWAY 441 BYPASS
DUBLIN, GEORGIA 31021
TEL.(478) 277-1955 FAX(478) 277-1978

revisions:

no	date	by	description

date: 09-30-14
scale: 1/2" = 1"
dr. by: HAMID
chk. by:

drawing no.
W14-36

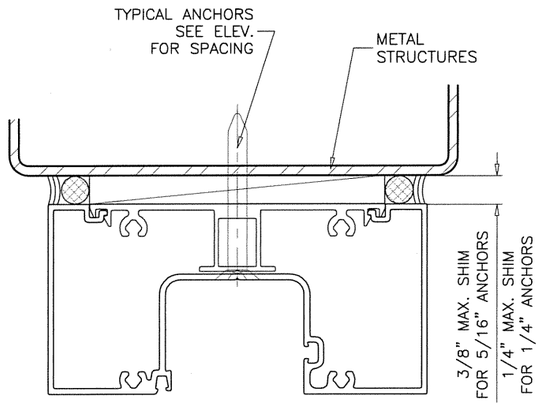

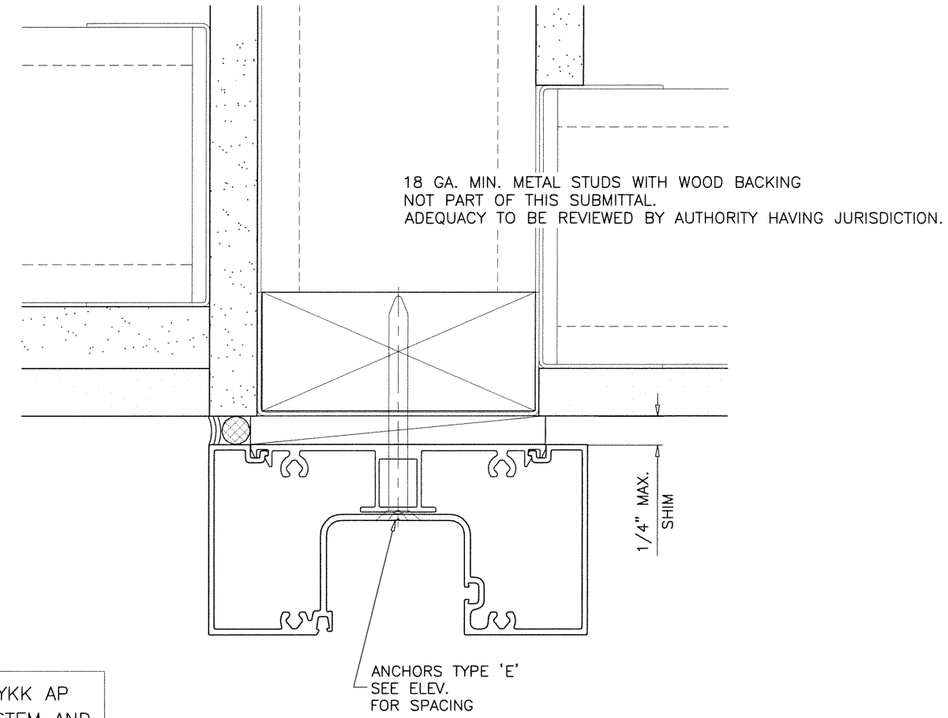

WOOD BUCKS AND METAL STRUCTURES NOT BY YKK AP MUST SUPPORT LOADS IMPOSED BY GLAZING SYSTEM AND TRANSFER THEM TO THE BUILDING STRUCTURE.

TYPICAL ANCHORS: SEE ELEV. FOR SPACING

'A'– 5/16" DIA. ULTRACON BY 'ELCO' (Fu=177 KSI, Fy=155 KSI)

INTO 2BY WOOD BUCKS OR WOOD STRUCTURES
1–1/2" MIN. PENETRATION INTO WOOD (HEAD/SILL)

THRU 1BY BUCKS INTO CONCRETE
1–1/4" MIN. EMBED INTO CONCRETE (HEAD/SILL)

DIRECTLY INTO CONCRETE
1–1/4" MIN. EMBED INTO CONCRETE (HEAD/SILL)

'B'– 5/16" DIA. TEKS/DRIL–FLEX SELF DRILLING SCREWS (GRADE 5 CRS)

INTO METAL STRUCTURES

STEEL : 12 GA. MIN. (Fy = 36 KSI MIN.)
ALUMINUM : 1/8" THK. MIN. (6063–T5 MIN.)
(STEEL IN CONTACT WITH ALUMINUM TO BE PLATED OR PAINTED)

TYPICAL EDGE DISTANCE

INTO CONCRETE = 3" MIN.
INTO WOOD STRUCTURE = 1" MIN.
INTO METAL STRUCTURE = 3/4" MIN.

'C'– 1/4" DIA. TAPCON (STL. OR 410 ST. STL.)BY 'ITW' (Fu=125 KSI, Fy=100 KSI)
1/4" DIA. ULTRACON BY 'ELCO' (Fu=177 KSI, Fy=155 KSI)
1/4" DIA. ULTRACON SS4 BY 'ELCO' (Fu=190 KSI, Fy=164 KSI)

INTO 2BY WOOD BUCKS OR WOOD STRUCTURES
1–1/2" MIN. PENETRATION INTO WOOD (HEAD/SILL)

THRU 1BY BUCKS INTO CONCRETE
1–1/4" MIN. EMBED INTO CONCRETE (HEAD/SILL)

DIRECTLY INTO CONCRETE
1–1/4" MIN. EMBED INTO CONCRETE (HEAD/SILL)

'D'– 1/4" DIA. TEKS/DRIL–FLEX SELF DRILLING SCREWS (GRADE 5 CRS)
1/4" DIA. BI–FLEX SELF DRILLING SCREWS (GRADE 2 CRS)

INTO METAL STRUCTURES

STEEL : 12 GA. MIN. (Fy = 36 KSI MIN.)
ALUMINUM : 1/8" THK. MIN. (6063–T5 MIN.)
(STEEL IN CONTACT WITH ALUMINUM TO BE PLATED OR PAINTED)

'E'– 1/4" DIA. TEKS/DRIL–FLEX SELF DRILLING SCREWS (GRADE 5 CRS)
1/4" DIA. BI–FLEX ST. STL. SELF DRILLING SCREWS

INTO 18 GA. MIN. METAL STUDS WITH WOOD BACKING
1–1/2" MIN. PENETRATION INTO WOOD

TYPICAL EDGE DISTANCE

INTO CONCRETE = 2–1/2" MIN. (ULTRACONS)
INTO CONCRETE = 4" MIN. (TAPCONS)
INTO WOOD STRUCTURE = 1" MIN.
INTO METAL STRUCTURE = 3/4" MIN.

WOOD AT HEAD OR SILL SG = 0.55 MIN.
CONCRETE AT HEAD OR SILL f'c = 3000 PSI MIN.

STATE OF TEXAS
JAVAD AHMAD
106516
LICENSED
PROFESSIONAL ENGINEER
Date & Time: 02/17/2016

AL-FAROOQ CORPORATION
ENGINEERS & PRODUCT DEVELOPMENT
1235 S.W. 87 AVE
MIAMI, FLORIDA 33174
TEL. (305) 264-8100 FAX. (305) 262-6978
STORE\W14–36YKK

YHS–50 FI ALUM FLUSH GLAZE STOREFRONT SYS. (L.M.I.)

YKK AP AMERICA INC.
1229 HIGHWAY 441 BYPASS
DUBLIN, GEORGIA 31021
TEL.(478) 277–1955 FAX(478) 277–1978

revisions:			
no	date	by	description

date: 09–30–14
scale: 1/2" = 1"
dr. by: HAMID
chk. by:

drawing no. W14–36

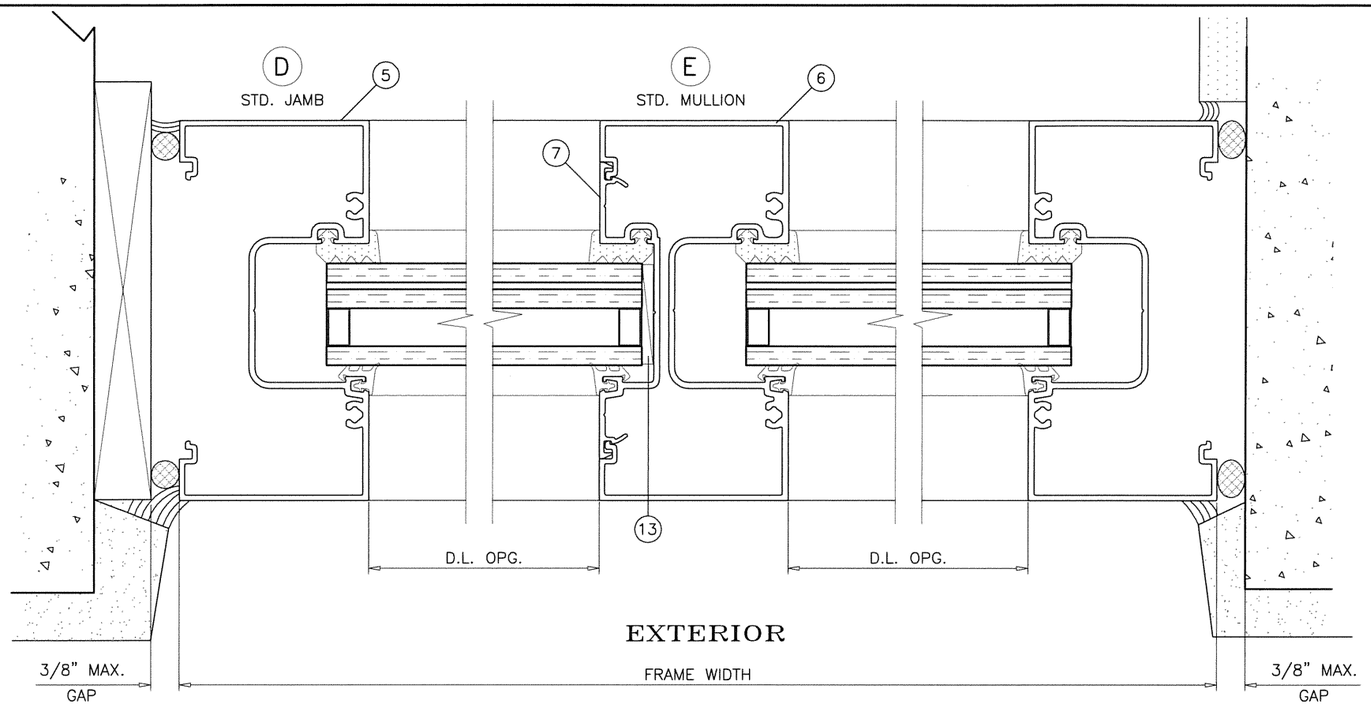

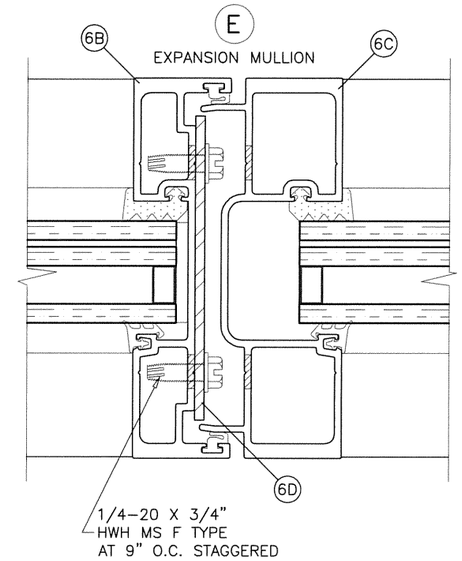

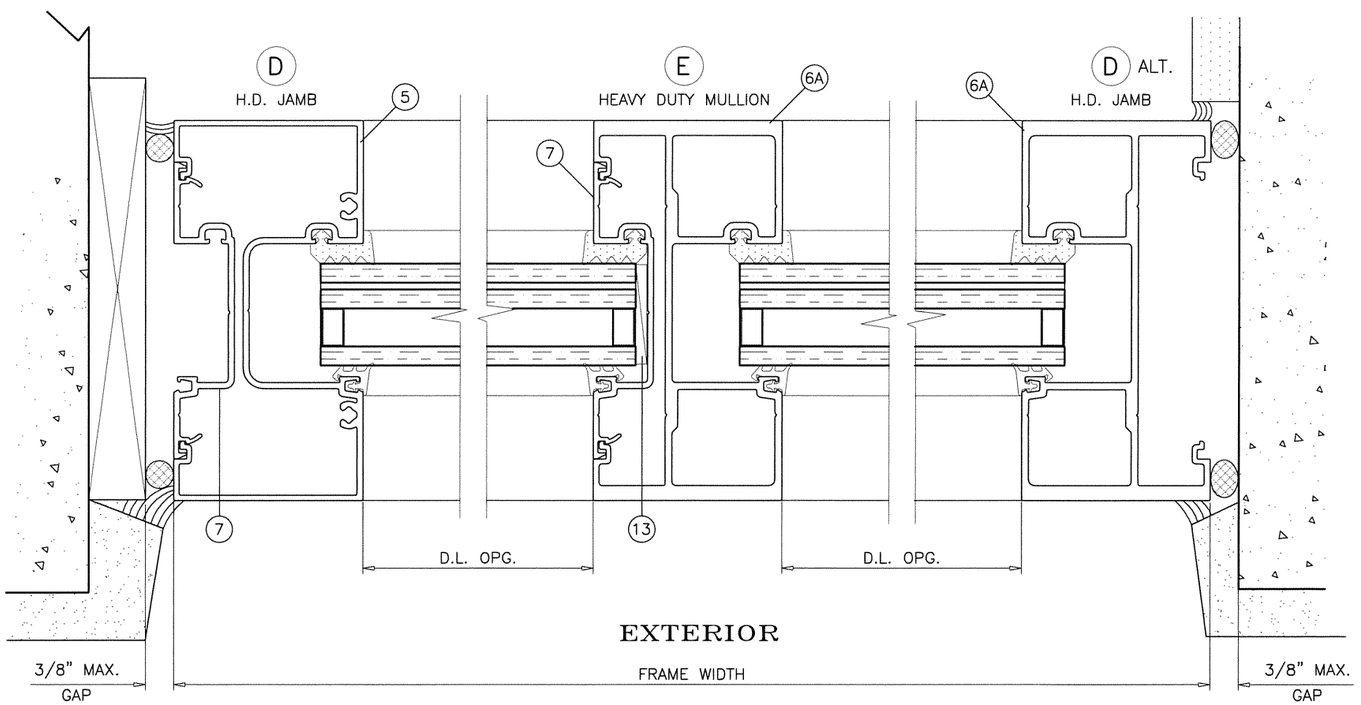

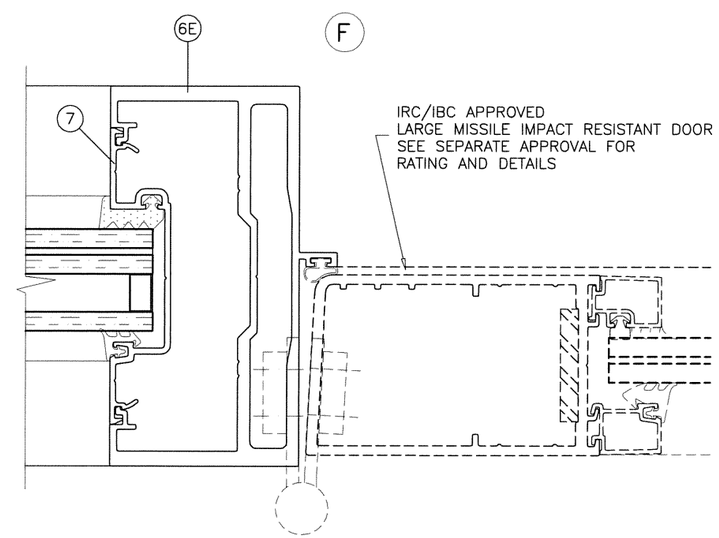

STATE OF TEXAS
JAVAD AHMAD
106516
Date & Time: 02/17/15 12:46
LICENSED
PROFESSIONAL ENGINEER

AL-FAROOQ CORPORATION
ENGINEERS & PRODUCT DEVELOPMENT
1235 S.W. 87 AVE
MIAMI, FLORIDA 33174
TEL. (305) 264-8100 FAX. (305) 262-6978

STORE\W14-36YKK

YHS-50 FI ALUM FLUSH GLAZE STOREFRONT SYS. (L.M.I.)

YKK AP AMERICA INC.
1229 HIGHWAY 441 BYPASS
DUBLIN, GEORGIA 31021
TEL.(478) 277-1955 FAX(478) 277-1978

revisions:

no	date	by	description

date: 09-30-14
scale: 1/2" = 1"
dr. by: HAMID
chk. by:

drawing no.
W14-36

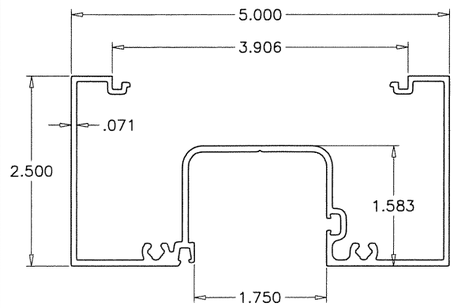

FRAME HEAD/JAMB/STD. MULLION

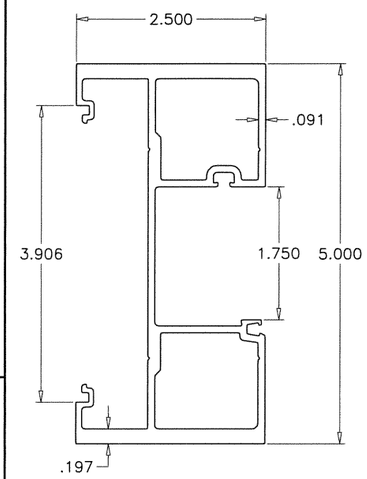

HEAVY DUTY MULLION

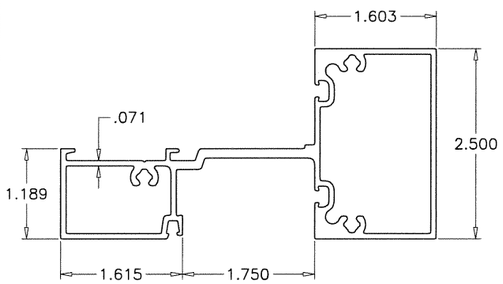

FRAME HORIZONTAL

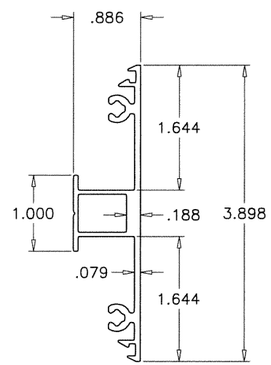

SNAP IN COVER

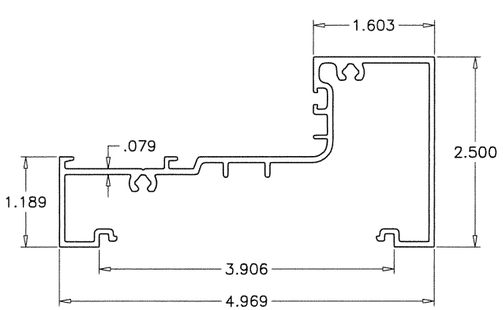

FRAME SILL

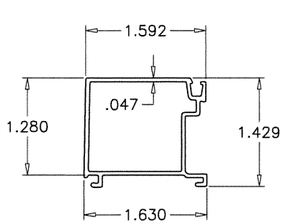

GLAZING STOP

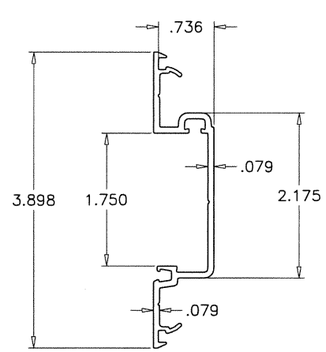

POCKET FILLER

ITEM NO.	PART NUMBER	QUANTITY	DESCRIPTION	MATERIAL	MANF./SUPPLIER/REMARKS
1	E9–0651	AS REQD.	FRAME HEAD	6063–T5	–
2	E9–0652	AS REQD.	FRAME SILL	6063–T5	–
3	E9–0653	AS REQD.	FRAME HORIZONTAL	6063–T5	–
4	E9–0658	AS REQD.	GLAZING STOP	6063–T5	–
5	E9–0651	AS REQD.	FRAME JAMB	6063–T5	–
6	E9–0651	AS REQD.	STANDARD MULLION	6063–T5	–
6A	E9–0654	AS REQD.	HEAVY DUTY JAMB/MULLION	6063–T5	–
6B	E9–0688	AS REQD.	FEMALE MULLION	6063–T5	–
6C	E9–0689	AS REQD.	MALE MULLION	6063–T5	–
6D	–	AS REQD.	EXPANSION MULLION REINF.	STEEL	–
6E	E9–0504	AS REQD.	DOOR MULLION	6063–T5	–
7	E9–0655	AS REQD.	POCKET FILLER	6063–T5	–
8	E9–0619	AS REQD.	SILL FLASHING	6063–T5	–
10	E1–1073	AS REQD.	ANCHOR PLATE	6063–T5	–
11	PC–1424	AS REQD.	#14 X 1–1/2" SMS	STEEL	FOR SILL, (2) AT EACH SIDE OF MULLION/JAMB
12	PC–1220	AS REQD.	#12 X 1–1/4" SMS	STEEL	FOR SCREW SPLINE
13	E2–0096	AS REQD.	SIDE BLOCK	EPDM	–
14	E2–0095	AS REQD.	SETTING BLOCK	EPDM	–
16	E2–0083	AS REQD.	EXTERIOR GLAZING GASKET	EPDM	–
17	E2–0088	AS REQD.	INTERIOR GLAZING GASKET	EPDM SPONGE	–
18	E2–0084	AS REQD.	INTERIOR GLAZING SPACER	EPDM	1/4" X 1/4"
19	DOW 995	AS REQD.	GLAZING COMPOUND	SILICONE	–

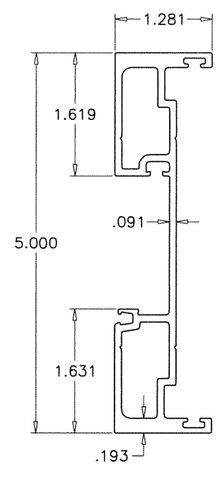

FEMALE MULLION

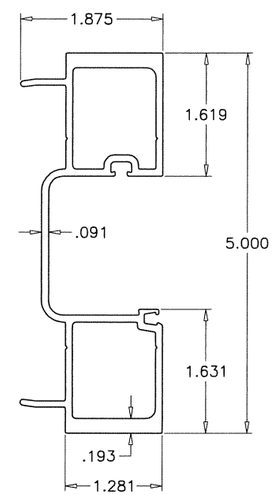

MALE MULLION

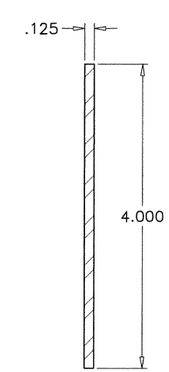

MULLION REINF.

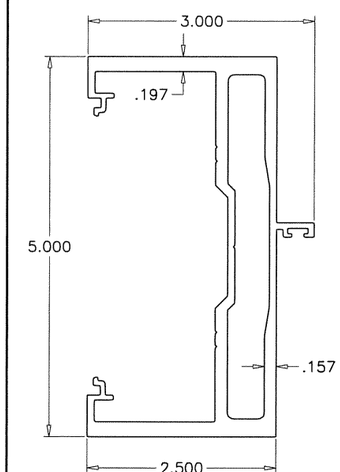

DOOR MULLION

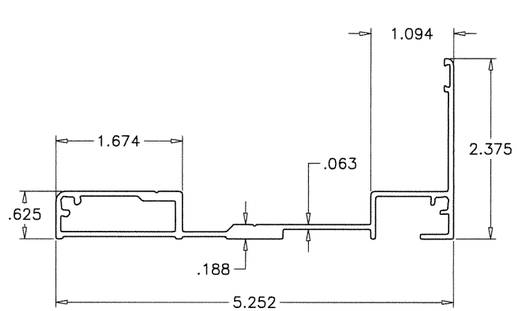

SILL FLASHING

STATE OF TEXAS
JAVAD AHMAD
106516
Date & Time: 02/17/2014 12:46
LICENSED PROFESSIONAL ENGINEER

AL-FAROOQ CORPORATION
ENGINEERS & PRODUCT DEVELOPMENT
1235 S.W. 87 AVE
MIAMI, FLORIDA 33174
TEL. (305) 264-8100 FAX. (305) 262-6978
STORE\W14–36YKK

YHS–50 FI ALUM FLUSH GLAZE STOREFRONT SYS. (L.M.I.)

YKK AP AMERICA INC.
1229 HIGHWAY 441 BYPASS
DUBLIN, GEORGIA 31021
TEL.(478) 277–1955 FAX(478) 277–1978

revisions:			
no	date	by	description

date: 09–30–14
scale: 1/2" = 1"
dr. by: HAMID
chk. by:

drawing no. W14–36

sheet 11 of 12

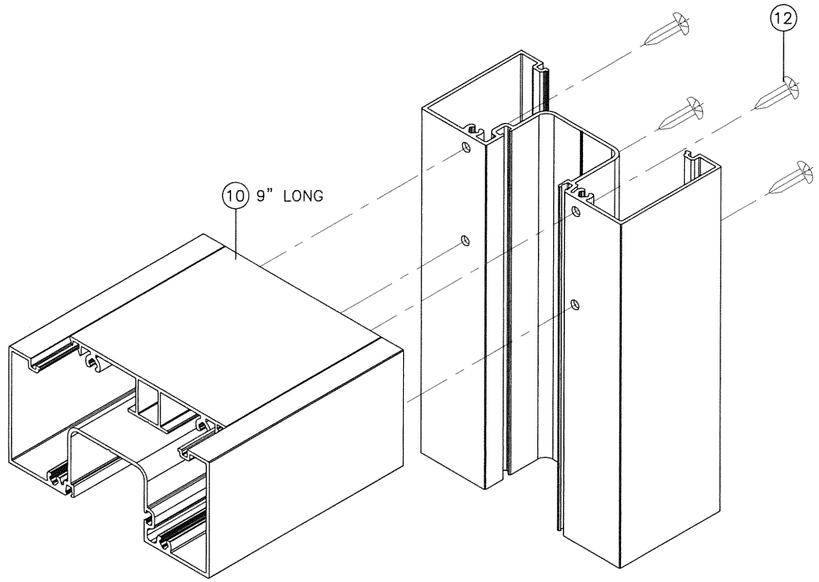

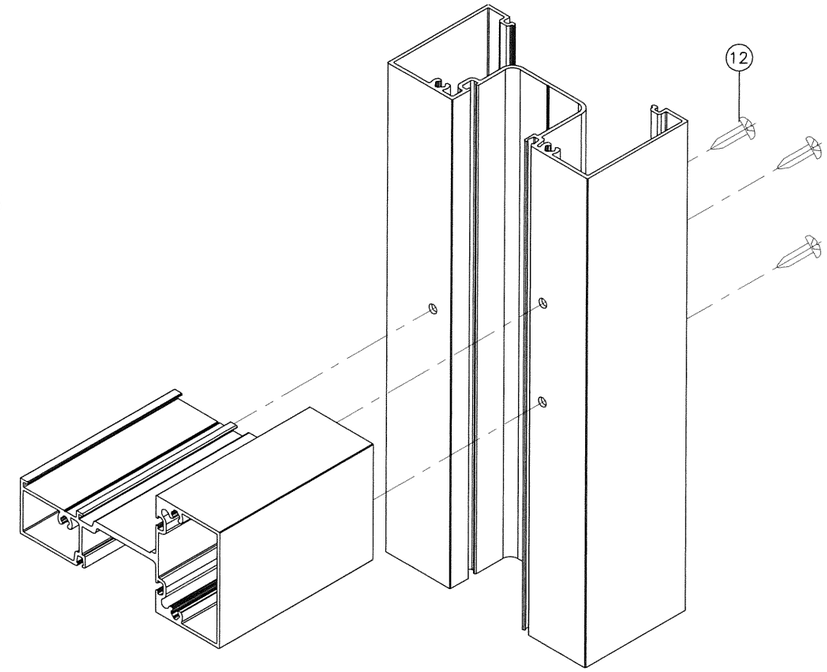

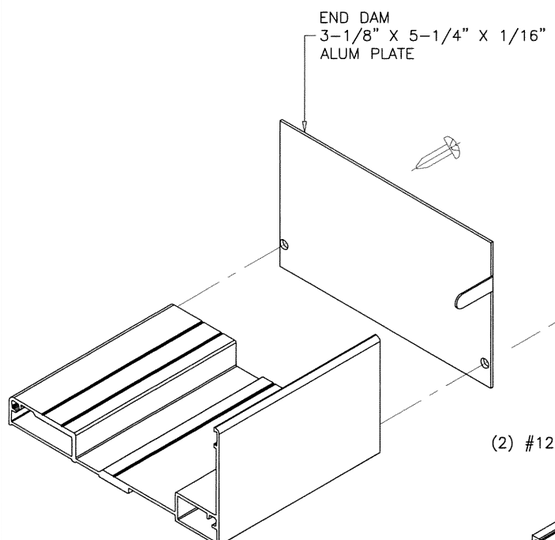

END DAM DETAIL

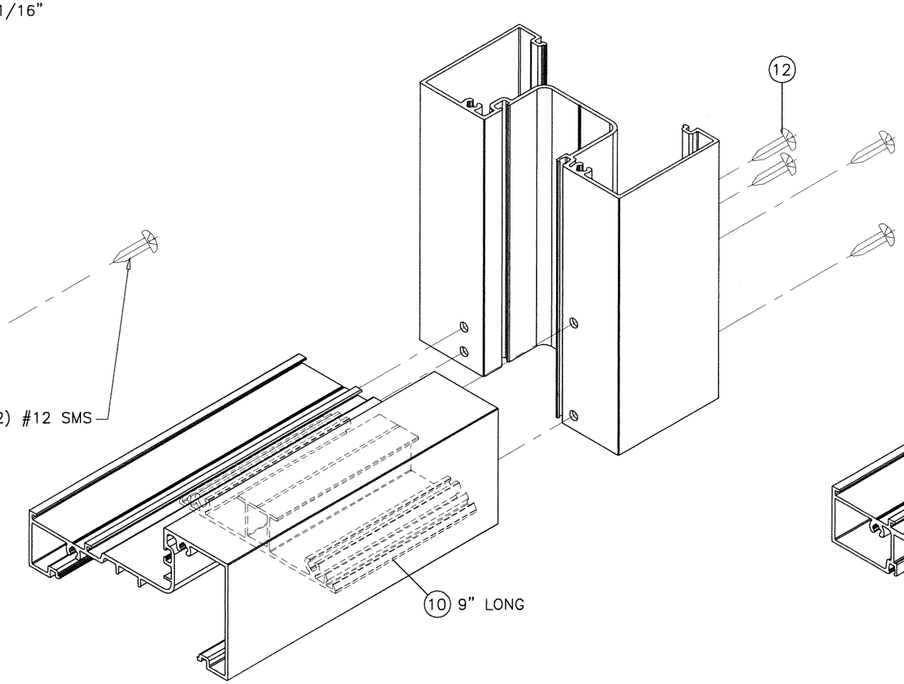

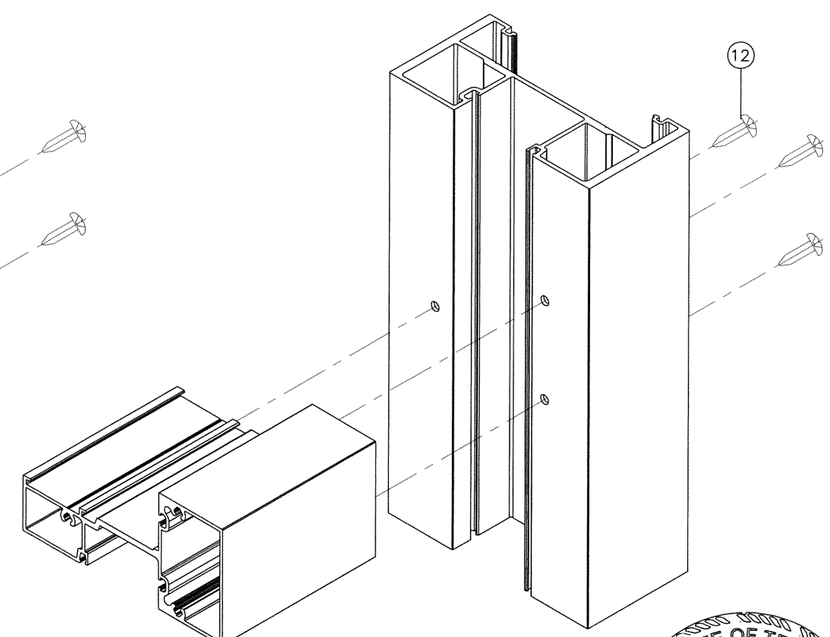

FRAME CORNERS

STATE OF TEXAS
JAVAD AHMAD
106516
Date & Time: 02/17/2016
LICENSED PROFESSIONAL ENGINEER

AL-FAROOQ CORPORATION
ENGINEERS & PRODUCT DEVELOPMENT
1235 S.W. 87 AVE
MIAMI, FLORIDA 33174
TEL. (305) 264-8100 FAX. (305) 262-6978
STORE\W14-36YKK

YHS-50 FI ALUM FLUSH GLAZE STOREFRONT SYS. (L.M.I.)

YKK AP AMERICA INC.
1229 HIGHWAY 441 BYPASS
DUBLIN, GEORGIA 31021
TEL.(478) 277-1955 FAX(478) 277-1978

revisions:

no	date	by	description

date: 09-30-14
scale: 1/2" = 1"
dr. by: HAMID
chk. by:

drawing no.
W14-36