GENERAL NOTES:

1. THESE CURTAIN WALL SYSTEMS HAVE BEEN TESTED, ANALYZED & APPROVED FOR DESIGN PRESSURES NOT TO EXCEED THOSE SHOWN IN THE "ALLOWABLE DESIGN PRESSURE TABLE(S)".
2. OPENINGS, BUCKING & BUCKING FASTENERS MUST BE PROPERLY DESIGNED & INSTALLED TO TRANSFER WIND LOADS TO THE STRUCTURE.
3. ALL HARDWARE & FASTENERS SHALL BE IN ACCORDANCE WITH THESE DRAWINGS & SHALL NOT VARY UNLESS SPECIFICALLY MENTIONED ON THE DRAWINGS. SPECIFIED ANCHOR EMBED TO BASE MATERIAL SHALL BE BEYOND WALL FINISH OR STUCCO.
4. THE DETAILS & SPECIFICATIONS SHOWN HEREIN REPRESENT THE PRODUCTS TESTED & PROPOSED FOR WATER, AIR, IMPACT, CYCLIC & UNIFORM STATIC AIR PRESSURE TESTING IN CONFORMANCE WITH ASTM E330, E283, E331, E1886 & E1996 FOR SMALL MISSILE IMPACT CURTAIN WALL SYSTEMS.
5. THESE CURTAIN WALL SYSTEMS HAVE BEEN DESIGNED IN ACCORDANCE WITH AND MEET THE REQUIREMENTS OF THE INTERNATIONAL BUILDING CODE (IBC).
6. THIS CURTAIN WALL SYSTEM MAY NOT BE INSTALLED AT ELEVATIONS BELOW 30 FT. ABOVE GRADE WITHOUT AN APPROVED SHUTTER.
7. ALL ANCHORS SECURING CURTAIN WALL FRAME TO PRESSURE TREATED BUCKS OR WOOD FRAMING SHALL BE CAPABLE OF RESISTING CORROSION CAUSED BY THE PRESSURE TREATING CHEMICALS IN THE WOOD.
8. DETERMINE THE POSITIVE & NEGATIVE DESIGN LOADS TO USE WHEN REFERENCING THESE DOCUMENTS IN ACCORDANCE WITH THE GOVERNING CODE AND GOVERNING WIND VELOCITY. FOR WIND LOAD CALCULATIONS IN ACCORDANCE WITH THE INTERNATIONAL BUILDING CODE, A DIRECTIONALITY FACTOR OF KD = 0.85 MAY BE APPLIED PER THE ASCE-7 STANDARD.
9. NO INCREASE IN ALLOWABLE STRESS HAS BEEN USED IN THE CERTIFICATION OF THIS PRODUCT. WIND LOAD DURATION FACTOR CD = 1.6 WAS USED FOR WOOD SCREW ANALYSIS ONLY.
10. MATERIALS, INCLUDING BUT NOT LIMITED TO STEEL SCREWS, THAT COME INTO CONTACT WITH OTHER DISSIMILAR MATERIALS SHALL BE SEPARATED OR COATED AS REQUIRED TO AVOID CORROSION OF EITHER MATERIAL.
11. THERE SHALL BE NO LIMIT TO THE NUMBER OF HORIZONTAL & VERTICAL PANELS USED FOR ANY JOB PROVIDING ALL RESTRICTIONS ARE MET PER THE ELEVATIONS.
12. TO THE BEST OF OUR KNOWLEDGE, THE CURTAIN WALL SYSTEMS SHOWN HEREIN ARE QUALITY ASSURED BY AN APPROVED CERTIFICATION/QA ENTITY & SHALL BE LABELED IN ACCORDANCE WITH APPLICABLE STANDARDS. THESE DRAWINGS SHOW ALL APPLICABLE ELEVATION, COMBINATION, INSTALLATION & COMPARATIVE ANALYSIS CONDITIONS AS DETERMINED THROUGH TESTING & ENGINEERING RATIONAL ANALYSIS. CURTAIN WALL ASSEMBLY SHALL BE IN ACCORDANCE WITH THESE DRAWINGS, THE MANUFACTURER'S QUALITY ASSURANCE SPECIFICATIONS & TESTING REPORTS.
13. CERTIFICATION OF THESE CURTAIN WALL SYSTEMS SHALL BE CONSIDERED VOID IF THEY ARE INSTALLED WITHOUT A BUILDING PERMIT FROM THE APPLICABLE LOCAL BUILDING DEPARTMENT OR IF THEY ARE INSTALLED BY ANYONE OTHER THAN A LICENSED CONTRACTOR EXPERIENCED WITH CURTAIN WALL INSTALLATIONS.

CORNER CONSTRUCTION:

STANDARD FRAMING AT TOP & BOTTOM HORIZONTAL MEMBERS: VERTICAL MEMBERS RUN THROUGH WHILE THE HORIZONTAL MEMBERS ARE SQUARE CUT, BUTTED AND MECHANICALLY FASTENED TO THE VERTICAL MEMBERS VIA A SHEAR BLOCK (ITEM #12). THE SHEAR BLOCK IS MECHANICALLY FASTENED TO THE VERTICAL FRAME MEMBER WITH 2 NO. 12 X 1 7/8" FHTF SCREWS. THE HORIZONTAL FRAME MEMBERS ARE ATTACHED TO THE SHEAR BLOCK WITH 2 NO. 12 X 7/8" PHTF SCREWS. CORNERS ARE SEALED WITH DOW 795 SILICONE SEALANT.

STANDARD FRAMING AT INTERMEDIATE HORIZONTAL MEMBERS: HORIZONTAL MEMBERS ARE SQUARE CUT, BUTTED AND MECHANICALLY FASTENED TO THE VERTICAL FRAME MEMBERS VIA A SHEAR BLOCK (ITEM #13). THE SHEAR BLOCK IS MECHANICALLY FASTENED TO THE VERTICAL FRAME MEMBER WITH 2 NO. 12 X 1 7/8" FHTF SCREWS. THE INTERMEDIATE HORIZONTAL FRAME MEMBERS ARE ATTACHED TO THE SHEAR BLOCK WITH 2 NO. 12 X 7/8" FHTF SCREWS. CORNERS ARE SEALED WITH DOW 795 SILICONE SEALANT.

TYPICAL 90 DEGREE CORNER FRAMING: VERTICAL CORNER MEMBERS RUN THROUGH WHILE THE HORIZONTAL MEMBERS ARE MITER CUT, BUTTED AND MECHANICALLY FASTENED TO THE VERTICAL MEMBERS VIA A SHEAR BLOCK (ITEM #14). THE SHEAR BLOCK IS MECHANICALLY FASTENED TO THE VERTICAL CORNER FRAME MEMBERS WITH 3 NO. 12 X 7/16" PHTF SCREWS. THE HORIZONTAL FRAME MEMBERS ARE ATTACHED TO THE SHEAR BLOCK WITH 2 NO. 12 X 1/2" FHTF SCREWS. CORNERS ARE SEALED WITH DOW 795 SILICONE SEALANT.

90 DEGREE CORNER FRAMING AT SPLICE JOINT LOCATIONS: VERTICAL CORNER MEMBERS RUN THROUGH WHILE THE HORIZONTAL MEMBERS ARE MITER CUT, BUTTED AND MECHANICALLY FASTENED TO THE VERTICAL MEMBERS VIA A SHEAR BLOCK (ITEM #16). THE SHEAR BLOCK IS MECHANICALLY FASTENED TO THE VERTICAL CORNER FRAME MEMBERS WITH 2 NO. 12 X 7/16" PHTF SCREWS (2 PER SHEAR BLOCK). THE HORIZONTAL FRAME MEMBERS ARE ATTACHED TO THE SHEAR BLOCK WITH 2 NO. 12 X 1/2" FHTF SCREWS (2 PER SHEAR BLOCK). CORNERS ARE SEALED WITH DOW 795 SILICONE SEALANT.

STANDARD FRAMING AT SPLICE JOINT LOCATIONS: VERTICAL MEMBERS RUN THROUGH WHILE THE HORIZONTAL MEMBERS ARE SQUARE CUT, BUTTED AND MECHANICALLY FASTENED TO THE VERTICAL MEMBERS VIA A SHEAR BLOCK (ITEM #15). THE SHEAR BLOCK IS MECHANICALLY FASTENED TO THE VERTICAL CORNER FRAME MEMBERS WITH 2 NO. 12 X 1 7/8" PHTF SCREWS (2 PER SHEAR BLOCK). THE HORIZONTAL FRAME MEMBERS ARE ATTACHED TO THE SHEAR BLOCK WITH 2 NO. 12 X 1/2" FHTF SCREWS (2 PER SHEAR BLOCK). CORNERS ARE SEALED WITH DOW 795 SILICONE SEALANT.

EVALUATION OF THIS PRODUCT IS BASED ON APPLICABLE STANDARDS AND/OR INFORMATION & RESULTS FROM APPLICABLE TEST REPORTS. THE BUILDING CODE VERSION CONSIDERED WITH THIS EVALUATION WAS THAT IN FORCE AT THE TIME OF THE EVALUATION. IN THE EVENT OF CODE VERSION CHANGES/UPDATES OR IN THE EVENT THAT NEW OR ADDITIONAL TESTING IS COMPLETED ON THIS PRODUCT, PRIOR TO STATING CODE COMPLIANCE, THE MANUFACTURER SHALL CONFIRM WITH THE EVALUATION ENGINEER OF RECORD THAT EVERYTHING SPECIFIED HERE-IN IS CURRENT WITH ALL CURRENT TESTING, CODES AND APPLICABLE STANDARDS.

ANCHOR LEGEND

ANCHOR SYMBOL	ANCHOR DESCRIPTION
⊞	STANDARD WIND LOAD ANCHOR
⊕	CORNER WIND LOAD ANCHOR
△	STANDARD DEAD LOAD ANCHOR
⊕	CORNER DEAD LOAD ANCHOR
■	STANDARD T-ANCHOR
◕	CORNER T-ANCHOR
▲	F-ANCHOR (FRAME MEMBER ENDS)

SEE SHEETS 5-9 FOR DETAILS OF ANCHORS

VERTICAL MEMBER REINFORCEMENT LEGEND

R1 = REINFORCEMENT PART NUMBER 29
R2 = REINFORCEMENT PART NUMBER 29 & 30
R3 = REINFORCEMENT PART NUMBER 31

SEE PARTS DRAWINGS & PARTS LIST FOR APPLICABLE REINFORCEMENT MEMBERS & THEIR DETAIL.

ANCHOR REQUIREMENTS TABLE (SINGLE & MULTI-SPAN REINFORCED CURTAIN WALLS)

OPENING TYPE (SUBSTRATE)	FRAME/CLIP TO OPENING FASTENER TYPE	MINIMUM EMBED	MINIMUM EDGE DIST.
F-PERIMETER ANCHOR SCREWS			
MIN. 16 GA. 50 KSI METAL STUD	1/4-14 GR. 5 SELF TAP/DRILL SCREW	FULL	1/2"
MIN. 2X6 WOOD FRAME OR BUCK (MIN. GR. 2 & G=0.55)	1/4" DIA. GR. 5 COARSE THREAD SCREW	1 1/4"	3/4"
MIN. 1/8" THK A36 STEEL	1/4-14 OR 20 GR. 5 SELF TAP/DRILL SCREW	FULL	1/2"
MIN. 3000 PSI CONCRETE	(1) 3/8" CONCRETE SCREW ANCHOR	2 1/2"	2 1/2"
MIN. C-90 CMU FILLED WITH MIN. 2500 PSI CONCRETE	(1) 3/8" CONCRETE SCREW ANCHOR	2 1/2"	2 1/2"
T & F-ANCHOR SCREWS/BOLTS (VERTICAL MEMBER ENDS)			
MIN. 1/8" THK A36 STEEL	1/4"-120 OR 14 430 SS HCMS OR GR. 5 CS THREAD FORMING SCREW	FULL	3/4"
	1/4" GR. 5 CS OR 316 SS BOLT WITH LOCK WASHER & NUT	FULL	3/4"
	1/2"-13 300 SS HCMS OR GR. 5 CS THREAD FORMING SCREW	FULL	1"
	1/2" GR. 5 CS OR 316 SS BOLT WITH LOCK WASHER & NUT	FULL	1"
(2) MIN. 3000 PSI CONCRETE	(1) 1/2" CONCRETE SCREW ANCHOR	3 1/2"	SEE DETAILS

(1) 3/8" & 1/2" CONCRETE SCREWS SHALL BE SIMPSON STRONG-TIE TITAN HD SCREW ANCHOR (GALVANIZED STEEL).
(2) MINIMUM CONCRETE SLAB THICKNESS FOR PLACEMENT OF "T" & "F" ANCHORS IS 5 1/2".

DRAWING USE INSTRUCTIONS:

1. DETERMINE IF THE WALL SYSTEM IS TO BE A MULTI-SPAN OR SINGLE SPAN CONDITION. IF MULTI-SPAN, ALL CONDITIONS SHOWN ON SHEETS 2 & 3 SHALL APPLY. IF A SINGLE SPAN, ALL CONDITIONS SHOWN ON SHEET 4 SHALL APPLY.
2. CONDITIONS MAY NOT BE MIXED BETWEEN WALL SYSTEM TYPES.
3. ALLOWABLE GLASS PRESSURE SHALL BE CONSIDERED WITH ALL WALL CONDITIONS AND SHALL CONTROL IF LESS THAN THOSE ALLOWABLE PRESSURES STATED FOR THE APPLICABLE FRAMING SYSTEM.

FREE SPANNING JAMB PERIMETER SEALANT NOTE (APPLICABLE TO ELEVATION ON ALL FREE SPANNING PERIMETER FRAME MEMBERS):
WHEN THERE IS NO CONTINUOUS JAMB SUPPORT, THE MINIMUM & MAXIMUM ALLOWABLE SPACE BETWEEN JAMB FRAME MEMBERS & THE OPENING SUBSTRATE OR FINISHES SHALL BE SPECIFIED BY THE ENGINEER OR ARCHITECT OF RECORD FOR EACH JOB BUT SHALL NOT BE LESS THAN 1/2" NOR GREATER THAN 1 3/8". WHEN CONSIDERING TYPE, DEPTH & JOINT SPAN OF SEALANT, THE ENGINEER/ARCHITECT SHALL TAKE INTO CONSIDERATION THE DEFLECTION OF THE JAMB MEMBER THAT WOULD OCCUR WHILE SUPPORTING THE JOB REQUIRED DESIGN WIND PRESSURE. ALSO TO BE CONSIDERED SHALL BE THE MATERIALS & SURFACES TO WHICH THE SEALANT WILL BE APPLIED.

MAXIMUM ALLOWABLE DESIGN PRESSURE (MULTI & SINGLE SPAN CURTAIN WALL)

+60/-60 PSF

1. THE ABOVE STATED PRESSURES ARE THE MAXIMUM ALLOWED ON ANY JOB REGARDLESS OF WHAT THE JOB SPECIFIC DESIGN RESULTS MAY SHOW. INCREASE OF ALLOWABLE DESIGN PRESSURE ON ANY JOB IS CONSIDERED OUTSIDE THE SCOPE OF THIS APPROVAL. SEE "MULTI-SPAN OR SINGLE SPAN WALL NOTES" ON SHEETS 2 & 4 FOR ACTUAL JOB DESIGN CONDITIONS.

NOTE: INFORMATION ON THIS SHEET APPLIES TO ALL ELEVATIONS.

DRAWN BY: W.W.S. | CHECKED BY: W.W.S.
PLOT: 1=48 | DATE: 03/19/13

NO.	REVISION DESCRIPTION	BY	DATE
A1	UPDATE FOR ADDENDUM 4 & UPDATE GLASS INNER LAYER NAMES	W.W.S.	09/07/16

DRAWING TITLE: 1600 SYSTEM 2 CURTAIN WALL (S.M.I.)

JOB INFORMATION: KAWNEER COMPANY, INC. 555 GUTHRIDGE COURT NORCROSS, GA 30092 770-449-5555

CONSULTANTS: W. W. SCHAEFER ENGINEERING & CONSULTING, P.A. (REG. NO. F-14980) 7480 150TH COURT NORTH PALM BEACH GARDENS, FL 33418 PHONE: 561-744-3424

CERTIFICATION: SEP 07 2017
WARREN W. SCHAEFER P.E. P.E. NO. 1132487

DRAWING NO. 1792T | REV. A
SHEET NO. 1 OF 16

NOTES APPLICABLE TO MULTI-SPAN CURTAIN WALLS

1. WITH EACH APPLICABLE JOB, SHOP DRAWINGS SHALL BE PREPARED AND CERTIFIED BY A LICENSED ENGINEER EXPERIENCED WITH CURTAIN WALL DESIGN.
2. THE RESPONSIBLE ENGINEER SHALL DESIGN THE WALL SYSTEM SEPARATELY FOR EACH JOB & CONFIRM THAT ALL CONDITIONS STATED HERE-IN HAVE BEEN CONSIDERED AND ADHERED TO IN THAT DESIGN.
3. IN HIS/HER DESIGN, THE RESPONSIBLE ENGINEER SHALL VERIFY THE INTEGRITY OF ALL CONNECTIONS AND FRAMING MEMBERS & SHALL TAKE FULL RESPONSIBILITY FOR THE INTEGRITY OF THE SYSTEM DESIGN AS A WHOLE WHILE NOT ALLOWING THE CONDITIONS STATED HERE-IN TO BE EXCEEDED. ALLOWABLE SUPPORT REACTIONS AND VERTICAL FRAMING MEMBER BENDING MOMENTS SHALL NOT EXCEED THOSE STATED IN THE TABLES ON THIS SHEET, REGARDLESS OF JOB DESIGN.
4. THE CURTAIN WALL DESIGN ENGINEER SHALL CONSIDER ALL APPLICABLE REACTION LOADS IN HIS/HER DESIGN WHILE NOT ALLOWING THE REACTIONS RESULTING FROM WIND LOADS TO EXCEED THOSE SPECIFIED IN THE ANCHOR REACTION LOAD TABLE.
5. THE WORSE CASE OF THE CONDITIONS SPECIFIED IN THIS PRODUCT APPROVAL DRAWING AND THOSE DETERMINED BY THE INDIVIDUAL JOB ENGINEER'S ANALYSIS & DESIGN SHALL CONTROL AS APPLICABLE FOR THE ACTUAL JOB.
6. REGARDLESS OF JOB DETERMINED MEMBER STRESS & DEFLECTION CONDITIONS, THE FOLLOWING SHALL APPLY:
   A. REINFORCEMENT TYPE R1 MUST BE PLACED BETWEEN SUPPORTS IN ALL SIDE JAMB & INTERMEDIATE VERTICAL FRAME MEMBERS THAT SPAN OVER 118" BETWEEN THEIR SUPPORTS (NOT REQUIRED IF THE UNSUPPORTED SPAN IS 118" OR LESS & THE JOB DESIGN ALLOWS FOR NO REINFORCEMENT).
   B. REINFORCEMENT TYPE R3 MUST BE PLACED BETWEEN SUPPORTS IN ALL CORNER VERTICAL FRAME MEMBERS THAT SPAN OVER 118" BETWEEN THEIR SUPPORTS (NOT REQUIRED IF THE UNSUPPORTED SPAN IS 118" OR LESS & THE JOB DESIGN ALLOWS FOR NO REINFORCEMENT).
7. REINFORCEMENT IS NOT REQUIRED TO BE CONTINUOUS TOP TO BOTTOM WITHIN THE VERTICAL FRAMING MEMBERS. REINFORCEMENT MAY BE NON-CONTINUOUS, AS DETERMINED FOR EACH JOB, PROVIDING IT MEETS THE MINIMUM GUIDELINES OF THIS DRAWING.
8. THIS ELEVATION SHOWS THE 1600 CURTAIN WALL SYSTEM 2 IN A MULTI-STORY APPLICATION. THE NUMBER OF FLOORS WITH WHICH THIS SYSTEM MAY BE USED RANGE FROM TWO(2) TO UNLIMITED WITH THE ONLY RESTRICTIONS BEING THE MAXIMUM SPAN BETWEEN FLOORS/SUPPORTS AND THE MAXIMUM D.L.O. SIZES SPECIFIED.
9. SPLICING OF VERTICAL FRAME MEMBERS MAY OCCUR BETWEEN SUPPORTS AS REQUIRED. LOCATION OF THOSE SPLICES SHALL BE WHERE A BENDING MOMENT OF NEAR ZERO(0) EXISTS IN THE MEMBER.
10. THE ELEVATION HERE-IN SHOWS F & T-ANCHORS AT THE BASE OF THE WALL ONLY. THESE ANCHORS MAY ALSO BE USED AT THE TOP OF A WALL IN LIEU OF THE WIND/DEAD LOAD ANCHORS SHOWN PROVIDING THE SPAN BETWEEN THE F OR T-ANCHOR AND THE BELOW WIND/DEAD LOAD ANCHORS DOES NOT EXCEED 167 3/4" & THEY ARE INSTALLED THE SAME AS SHOWN AT THE BASE.

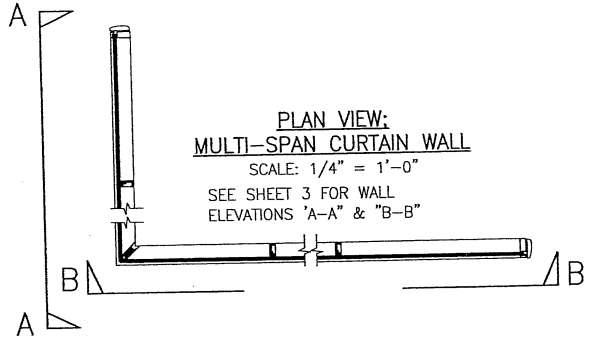

PLAN VIEW:
MULTI-SPAN CURTAIN WALL
SCALE: 1/4" = 1'-0"
SEE SHEET 3 FOR WALL ELEVATIONS "A-A" & "B-B"

(1) MAXIMUM ALLOWABLE BENDING MOMENTS IN VERTICAL FRAMING MEMBERS (FOR USE WITH MULTI-SPAN CURTAIN WALL)

(2) VERTICAL MEMBER	(3) MAXIMUM ALLOWABLE BENDING MOMENT (POS & NEG)
SIDE JAMB MEMBER WITH NO REINFORCEMENT	33816 IN-LB
SIDE JAMB MEMBER WITH REINFORCEMENT "R1"	33816 IN-LB
SIDE JAMB MEMBER WITH REINFORCEMENT "R2"	45801 IN-LB
INTERMEDIATE MEMBER WITH NO REINFORCEMENT	39525 IN-LB
INTERMEDIATE MEMBER WITH REINFORCEMENT "R1"	65028 IN-LB
INTERMEDIATE MEMBER WITH REINFORCEMENT "R2"	87938 IN-LB
CORNER MEMBER WITH NO REINFORCEMENT	(4) 42383 IN-LB
CORNER MEMBER WITH REINFORCEMENT "R3"	(4) 47823 IN-LB

NOTES:
(1) THE VALUES IS THIS TABLE ARE APPLICABLE TO THE JOB REQUIRED DESIGN OF THE MULTI-SPAN WALL SYSTEM & NEED NOT BE CONSIDERED WITH SINGLE SPAN WALLS. ALL SINGLE SPAN MEMBER & REINFORCEMENT CONDITIONS SHALL BE AS SPECIFICALLY SPECIFIED IN THE SINGLE SPAN ELEVATIONS.
(2) FOR DESCRIPTIONS OF REINFORCEMENTS, SEE THE "VERTICAL MEMBER REINFORCEMENT LEGEND".
(3) ALL VALUES ARE BASED ON THE WORSE CASE OF TESTED MOMENT AND ALLOWABLE MOMENT.
(4) MOMENT VALUE SHOWN FOR THE CORNER MULLION IS DUE TO THE RESULTANT LOAD IN THE PLANE OF THE MULLION (LOAD FROM BOTH SIDES COMBINED INTO A RESULTANT). FOR SINGLE SIDE LOAD (LOAD VECTOR 45 DEGREES TO MULLION ANGLE), IN THE DIRECTION OF THE SIDE LOAD, THE ALLOWABLE MOMENT SHALL NOT EXCEED 29970 IN-LB WHEN NON-REINFORCED NOR 33816 IN-LB. WHEN REINFORCED.

ANCHOR REACTION LOAD CAPACITY (MULTI-SPAN CURTAIN WALL)

ANCHOR SYMBOL	ANCHOR DESCRIPTION	(1) MAXIMUM ALLOWABLE REACTION LOAD
⊞	SIDE JAMB WIND LOAD ANCHOR	2297 LBS
△	SIDE JAMB DEAD LOAD ANCHOR	2297 LBS
⊞	INTERMEDIATE WIND LOAD ANCHOR	4417 LBS
⊕	CORNER WIND LOAD ANCHOR	(2) 3248 LBS
△	INTERMEDIATE DEAD LOAD ANCHOR	4417 LBS
⊕	CORNER DEAD LOAD ANCHOR	(2) 3248 LBS
■	STANDARD T-ANCHOR	2096 LBS
◐	CORNER T-ANCHOR	(2) 1350 LBS
▲	F-ANCHOR (FRAME MEMBER ENDS)	1092 LBS

(1) MAXIMUM ALLOWABLE REACTION LOADS SHOWN CONSIDER REACTIONS FROM WIND LOADS ONLY & APPLY TO BOTH POSITIVE & NEGATIVE WIND DIRECTIONS. IN ADDITION TO WIND LOADS, THE CURTAIN WALL DESIGN ENGINEER OF RECORD FOR EACH PROJECT SHALL ALSO CONSIDER OTHER APPLICABLE LOADS SUCH AS, BUT POSSIBLY NOT LIMITED TO, DEAD LOADS FROM THE CURTAIN WALL WEIGHT.
(2) REACTION LOAD SHOWN FOR THE CORNER ANCHORS IS THE RESULTANT LOAD IN THE PLANE OF THE MULLION (LOAD FROM BOTH SIDES COMBINED INTO A RESULTANT). FOR EITHER SIDE LOAD, THE ALLOWABLE REACTION LOAD SHALL NOT EXCEED 2297 LB. FROM EITHER SIDE FOR THE WIND & DEAD LOAD ANCHORS NOR 954 LBS FROM EITHER SIDE FOR THE T-ANCHOR.

MAXIMUM ALLOWABLE FRAMING MEMBER DEFLECTION

L/180 (SPAN OF MEMBER DIVIDED BY 180)

NOTE: THIS IS THE MAXIMUM ALLOWABLE DEFLECTION AS RESTRICTED BY THE BUILDING CODE. IF JOB CONDITIONS REQUIRE LESS DEFLECTION, THE JOB CONDITIONS SHALL CONTROL.

OPTIONS FOR MULTI-SPAN CURTAIN WALL DESIGN & REQUIREMENTS:

OPTION 1: USE THE INFORMATION SPECIFIED ON THIS SHEET FOR AN EXACT APPROACH TO DESIGN THE CURTAIN WALL FRAMING WHILE BEING REQUIRED TO PROVIDE ENGINEER SIGNED AND SEALED JOB SPECIFIC SHOP DRAWINGS FOR EACH JOB.
OPTION 2: USE THE LOAD TABLES ISSUED WITHIN W. W. SCHAEFER ENGINEERING & CONSULTING, P.A.'S ADDENDUM "A" TO CONSERVATIVELY DETERMINE THE REQUIREMENTS FOR THE CURTAIN WALL FRAMING. WITH THIS OPTION, SIGNED AND SEALED JOB SPECIFIC SHOP DRAWINGS ARE NOT A REQUIREMENT OF THIS APPROVAL.

NOTE: INFORMATION ON THIS SHEET APPLIES TO ELEVATIONS ON SHEET 3 ONLY.

STATE OF TEXAS
WARREN W. SCHAEFER
113497
LICENSED PROFESSIONAL ENGINEER

DRAWN BY: W.W.S.	CHECKED BY: W.W.S.
PLOT: 1=48	DATE: 03/19/13

NO.	REVISION DESCRIPTION	BY	DATE

DRAWING TITLE: 1600 SYSTEM 2 CURTAIN WALL (S.M.I.)

JOB INFORMATION: KAWNEER COMPANY, INC. 555 GUTHRIDGE COURT NORCROSS, GA 30092 770-449-5555

CONSULTANTS: W. W. SCHAEFER ENGINEERING & CONSULTING, P.A. (REG. NO. F-14980) 7480 150TH COURT NORTH PALM BEACH GARDENS, FL 33418 PHONE: 561-744-3424

CERTIFICATION: SEP 07 2016 WARREN W. SCHAEFER P.E. P.E. NO. 113497

DRAWING NO. 1792T REV. A

SHEET NO. 2 OF 16

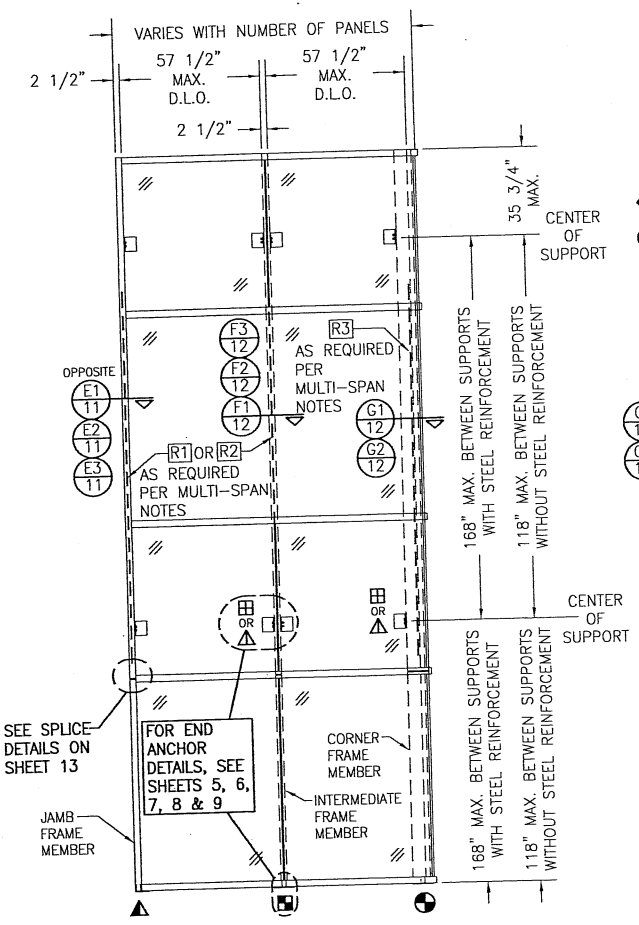

EXTERIOR ELEVATION VIEW "A–A": MULTI–SPAN CURTAIN WALL

SCALE: 1/4" = 1'–0"

SPANNING SIDE JAMB SHOWN. CONTINUOUSLY SUPPORTED SIDE JAMB ALSO APPLIES PER ALTERNATE SIDE JAMB CONDITION ELEVATION ON THIS SHEET.

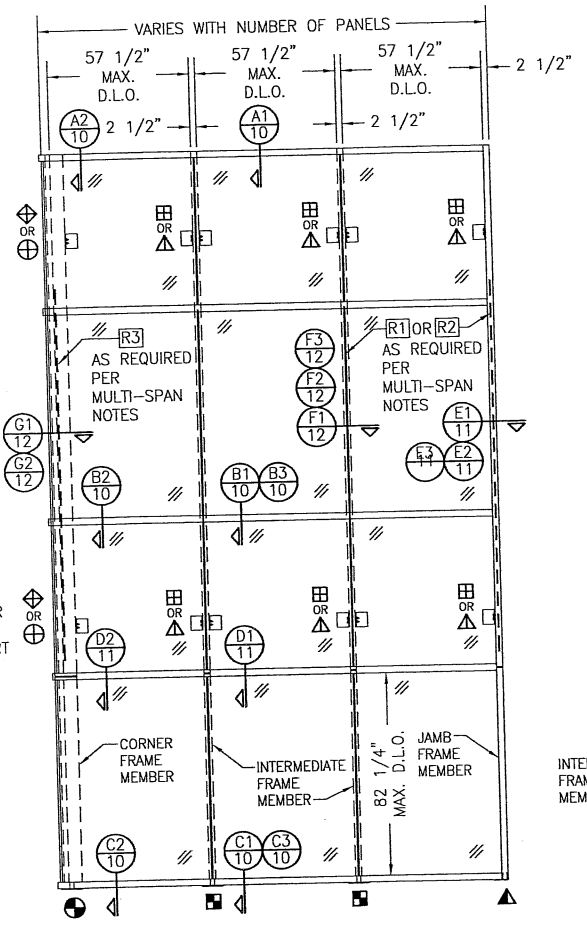

EXTERIOR ELEVATION VIEW "B–B": MULTI–SPAN CURTAIN WALL

SCALE: 1/4" = 1'–0"

SPANNING SIDE JAMB SHOWN. CONTINUOUSLY SUPPORTED SIDE JAMB ALSO APPLIES PER ALTERNATE SIDE JAMB CONDITION ELEVATION ON THIS SHEET.

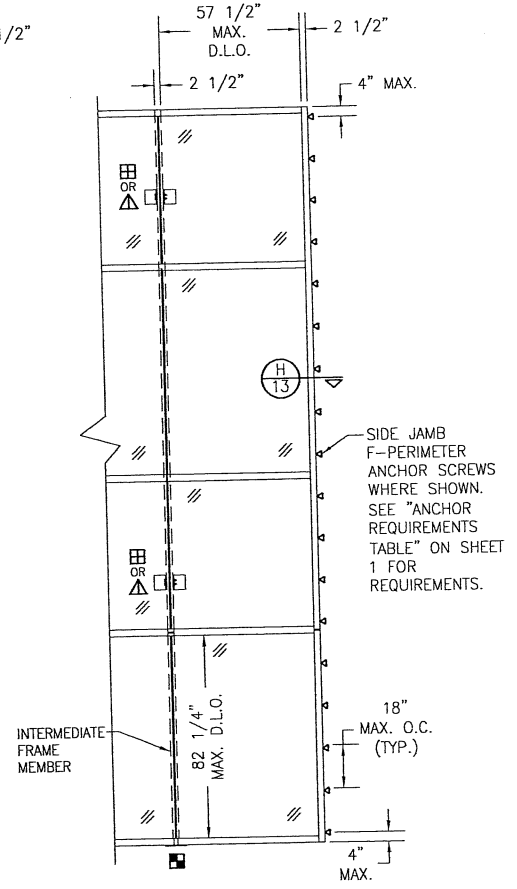

ALTERNATE MULTI–SPAN SIDE JAMB CONDITION: CONTINUOUSLY SUPPORTED

SCALE: 1/4" = 1'–0"

DRAWN BY: W.W.S.	CHECKED BY: W.W.S.
PLOT: 1=48	DATE: 03/19/13

NO.	REVISION DESCRIPTION	BY	DATE

DRAWING TITLE
1600 SYSTEM 2 CURTAIN WALL (S.M.I.)

JOB INFORMATION:
KAWNEER COMPANY, INC.
555 GUTHRIDGE COURT
NORCROSS, GA 30092
770–449–5555

CONSULTANTS
W. W. SCHAEFER ENGINEERING & CONSULTING, P.A. (REG. NO. F–14980)
7480 150TH COURT NORTH
PALM BEACH GARDENS, FL 33418
PHONE: 561–744–3424

STATE OF TEXAS
WARREN W. SCHAEFER
113437
LICENSED PROFESSIONAL ENGINEER

SEP 07 2016

WARREN W. SCHAEFER, P.E.
P.E. NO. 113437

DRAWING NO. 1792T
REV. A

SHEET NO. 3 OF 16

NOTES APPLICABLE TO SINGLE-SPAN CURTAIN WALLS

1. REINFORCEMENT IN VERTICAL FRAME MEMBERS SHALL BE AS REQUIRED BY THE LOAD TABLES ON THIS SHEET. REINFORCEMENT SHALL RUN CONTINUOUS IN ALL SPANNING VERTICAL MEMBERS & EXTEND TO WITHIN 18" OF THE ENDS.
2. SIDE JAMB MEMBERS DO NOT REQUIRE REINFORCEMENT WHEN THEY ARE SUPPORTED WITH A CONTINUOUS SIDE JAMB F-PERIMETER ANCHOR.
3. THERE IS NO LIMIT TO THE NUMBER OF SECTIONS HORIZONTALLY PROVIDING THE OPENING IS DESIGNED TO SUPPORT THE LOADS TRANSFERRED FROM THE WALL SYSTEM.
4. THE ELEVATION HERE-IN SHOWS F & T-ANCHORS AT THE BASE OF THE WALL ONLY. THESE ANCHORS MAY ALSO BE USED AT THE TOP OF A WALL IN LIEU OF THE WIND LOAD ANCHORS SHOWN PROVIDING THEY ARE INSTALLED THE SAME AS SHOWN AT THE BASE.
5. SIDE JAMB FRAME MEMBERS MAY BE SUPPORTED EITHER BY A CONTINUOUS SIDE JAMB FRAME F-PERIMETER ANCHOR OR BY END ANCHORS AS SHOWN.
6. THE LOAD WIDTH "W" VALUE USED IN THE LOAD TABLE FOR ANY CORNER FRAME MEMBER SHALL BE THE LESSER OF LOAD WIDTH AT THE LEFT & RIGHT SIDE OF THE CORNER.
7. ALL CONDITIONS SHOWN IN THESE ELEVATIONS SHALL APPLY TO ALL JOBS. CONDITIONS DIFFERING FROM THOSE SHOWN ARE NOT PART OF THIS PRODUCTS APPROVAL AND ARE CONSIDERED OUTSIDE THE SCOPE OF THIS APPROVAL.

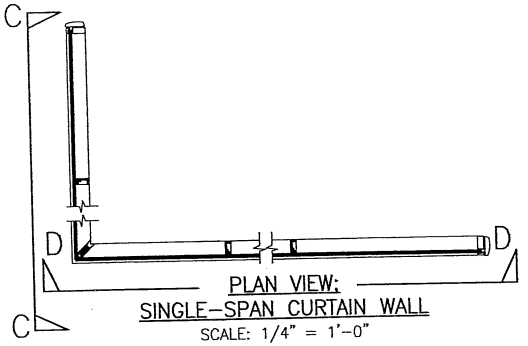

PLAN VIEW:
SINGLE-SPAN CURTAIN WALL
SCALE: 1/4" = 1'-0"

SINGLE SPAN LOAD TABLE (INTERMEDIATE & SIDE MEMBERS)

MAX. FRAME HEIGHT (IN.)	MAX. LOAD WIDTH (IN.)	ALLOWABLE PRESSURE (+/-PSF) REINFORCEMENT TYPE NONE	R1	R2
INTERMEDIATE MEMBERS				
167.75	60	N/A	N/A	60.0
155	60	N/A	52.0	60.0
	54	N/A	57.7	60.0
	52	N/A	60.0	60.0
144	60	N/A	60.0	60.0
106	60	60.0	60.0	60.0
SIDE JAMB MEMBERS				
167.75	31.25	N/A	60.0	60.0
135	60	60.0	60.0	60.0

SINGLE SPAN LOAD TABLE (CORNER MEMBERS)

MAX. FRAME HEIGHT (IN.)	MAX. LOAD WIDTH (IN.)	ALLOWABLE PRESSURE (+/-PSF) REINFORCEMENT TYPE NONE	R3
167.75	30.25	N/A	N/A
110	30.25	60.0	60.0

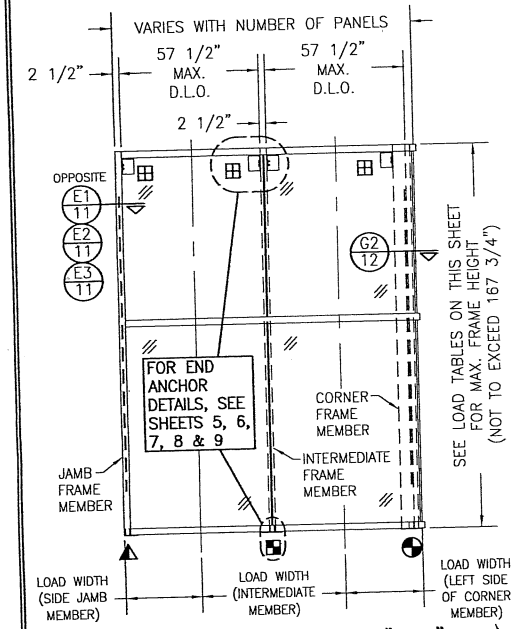

EXTERIOR ELEVATION VIEW "C-C":
SINGLE SPAN CURTAIN WALL
SCALE: 1/4" = 1'-0"
SPANNING SIDE JAMB SHOWN. CONTINUOUSLY SUPPORTED SIDE JAMB ALSO APPLIES PER ALTERNATE SIDE JAMB CONDITION ELEVATION ON THIS SHEET.

SEE NOTE 6 ON THIS SHEET.

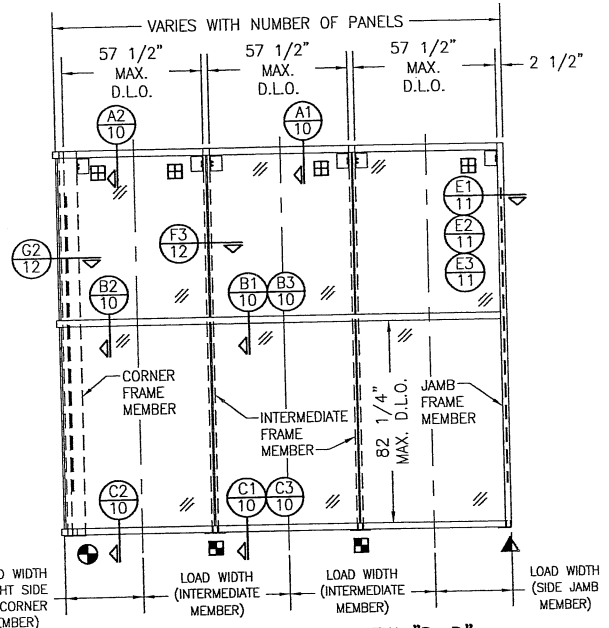

EXTERIOR ELEVATION VIEW "D-D":
SINGLE SPAN CURTAIN WALL
SCALE: 1/4" = 1'-0"
SPANNING SIDE JAMB SHOWN. CONTINUOUSLY SUPPORTED SIDE JAMB ALSO APPLIES PER ALTERNATE SIDE JAMB CONDITION ELEVATION ON THIS SHEET.

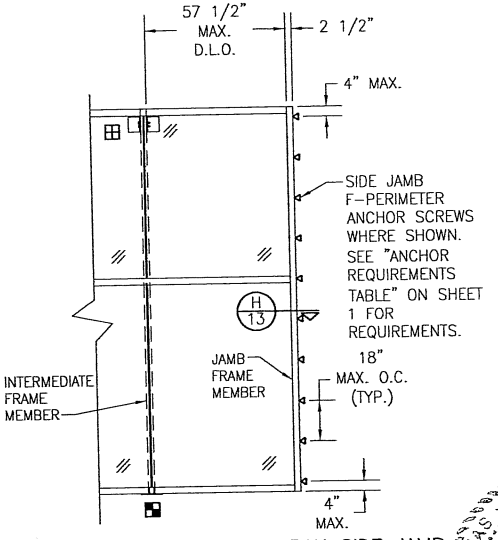

ALTERNATE SINGLE SPAN SIDE JAMB CONDITION: CONTINUOUSLY SUPPORTED
SCALE: 1/4" = 1'-0"

NOTE: INFORMATION ON THIS SHEET APPLIES TO ELEVATIONS ON THIS SHEET ONLY.

STATE OF TEXAS WARREN W. SCHAEFER 113497 LICENSED PROFESSIONAL ENGINEER

SEP 07 2016

DRAWN BY: W.W.S.	CHECKED BY: W.W.S.
PLOT: 1=48	DATE: 03/19/13

NO.	REVISION DESCRIPTION	BY	DATE

JOB INFORMATION:
KAWNEER COMPANY, INC.
555 GUTHRIDGE COURT
NORCROSS, GA 30092
770-449-5555

DRAWING TITLE
1600 SYSTEM 2 CURTAIN WALL (S.M.I.)

CONSULTANTS
W. W. SCHAEFER ENGINEERING & CONSULTING, P.A. (REG. NO. F-14980)
7480 150TH COURT NORTH
PALM BEACH GARDENS, FL 33418
PHONE: 561-744-3424

CERTIFICATION
WARREN W. SCHAEFER, P.E.
P.E. NO. 113497

DRAWING NO. 1792T
REV. A
SHEET NO. 4 OF 16

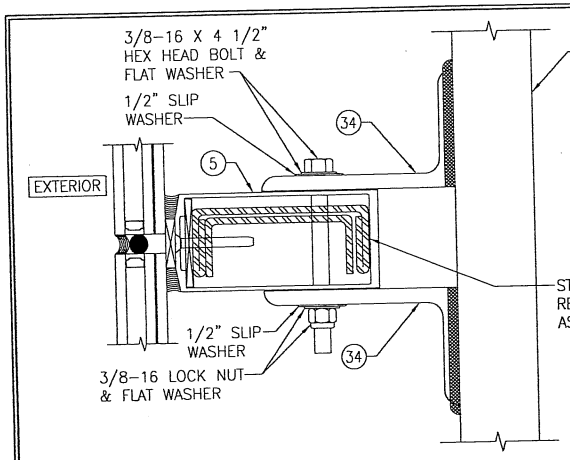

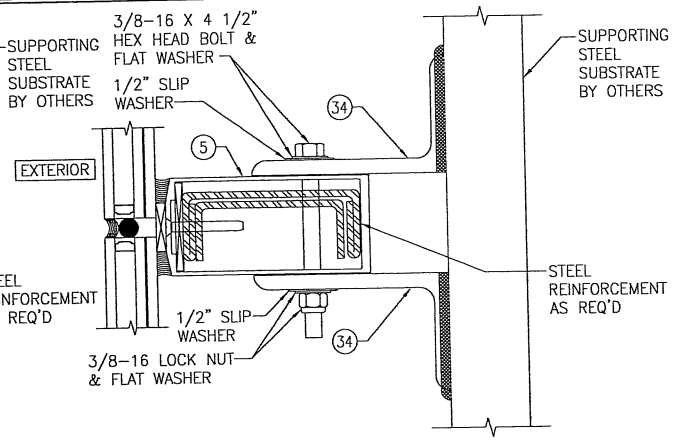

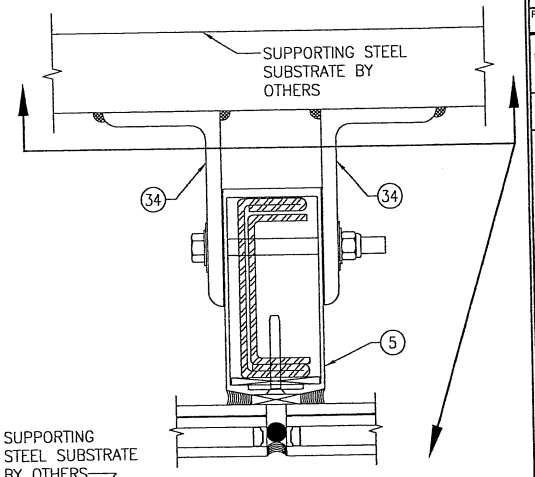

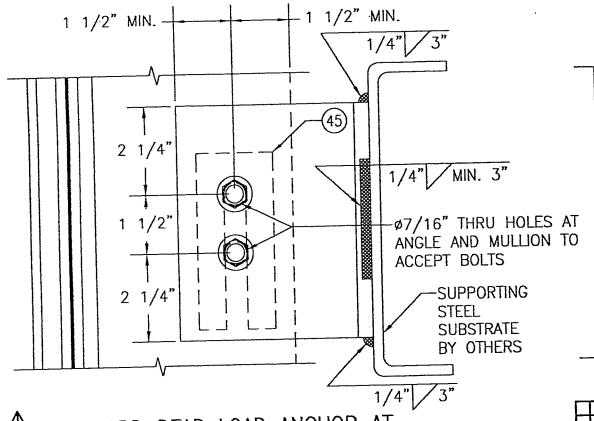

⚠ STANDARD DEAD LOAD ANCHOR AT INTERMEDIATE MEMBERS

SCALE: 1/3 FULL

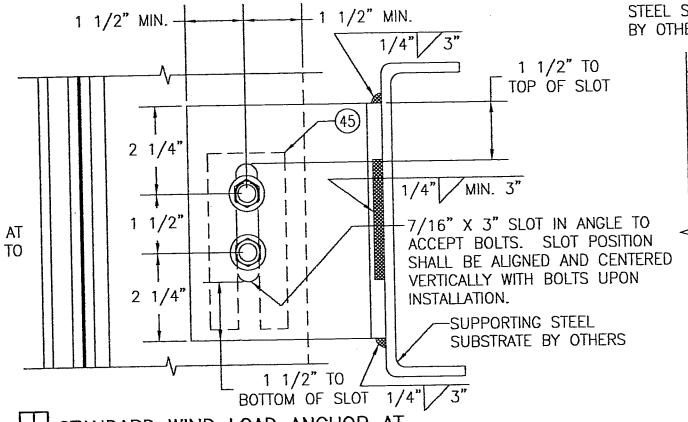

⊞ STANDARD WIND LOAD ANCHOR AT INTERMEDIATE MEMBERS

SCALE: 1/3 FULL

NOTE: ALL 3/8" BOLTS CONNECTING ANGLES TO MULLIONS SHALL BE GRADE 5 STEEL OR 300 SERIES STAINLESS STEEL.

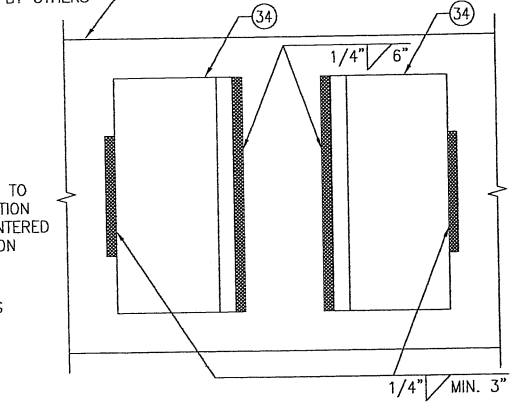

ALTERNATE WELD DETAIL FOR WIND & DEAD LOAD ANCHORS AT INTERMEDIATE MEMBERS

SCALE: 1/3 FULL

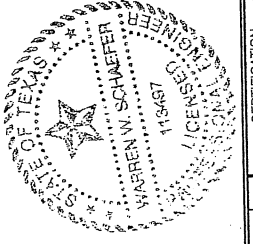

DRAWN BY: W.W.S.	CHECKED BY: W.W.S.
PLOT: 1=3	DATE: 03/19/13

NO.	REVISION DESCRIPTION	BY	DATE

JOB INFORMATION:
KAWNEER COMPANY, INC.
555 GUTHRIDGE COURT
NORCROSS, GA 30092
770-449-5555

DRAWING TITLE
1600 SYSTEM 2 CURTAIN WALL (S.M.I.)

CONSULTANTS
W. W. SCHAEFER ENGINEERING & CONSULTING, P.A. (REG. NO. F-14980)
7480 150TH COURT NORTH
PALM BEACH GARDENS, FL 33418
PHONE: 561-744-3424

CERTIFICATION
SEP 07 2016
WARREN W. SCHAEFER, P.E.
P.E. NO. 113497

DRAWING NO.	REV.
1792T	A

SHEET NO. 5 OF 16

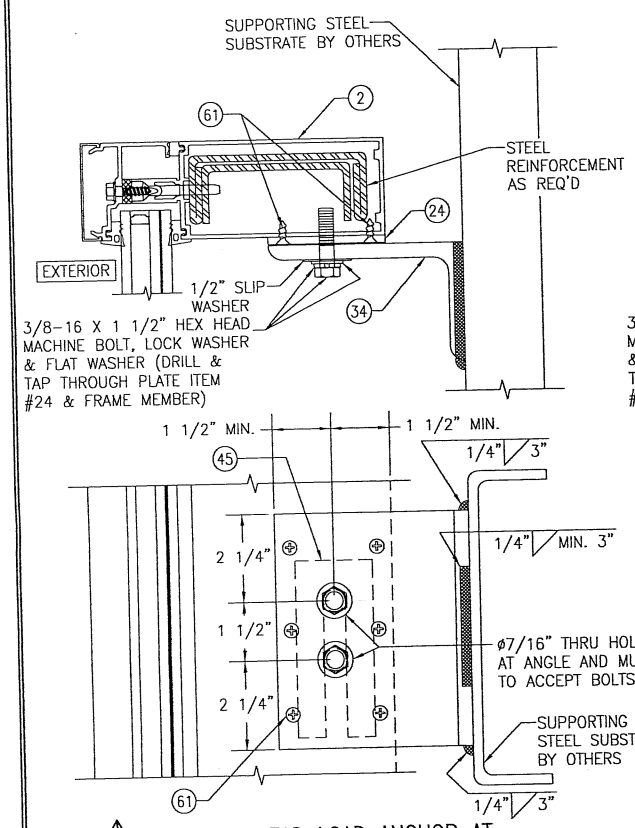

⚠ STANDARD DEAD LOAD ANCHOR AT SIDE JAMB MEMBERS

SCALE: 1/3 FULL

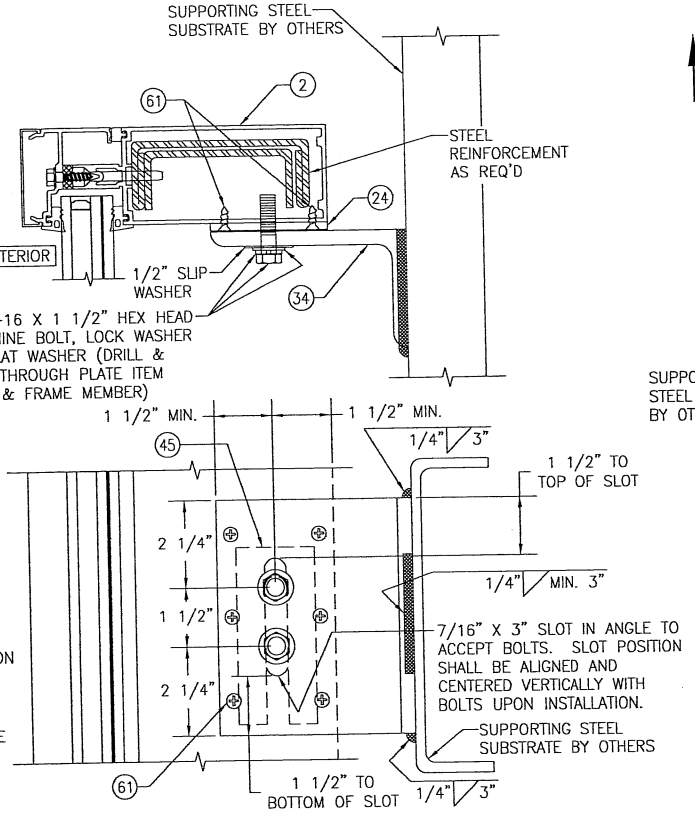

⊞ STANDARD WIND LOAD ANCHOR AT SIDE JAMB MEMBERS

SCALE: 1/3 FULL

NOTE: ALL 3/8" BOLTS CONNECTING ANGLES TO MULLIONS SHALL BE GRADE 5 STEEL OR 300 SERIES STAINLESS STEEL.

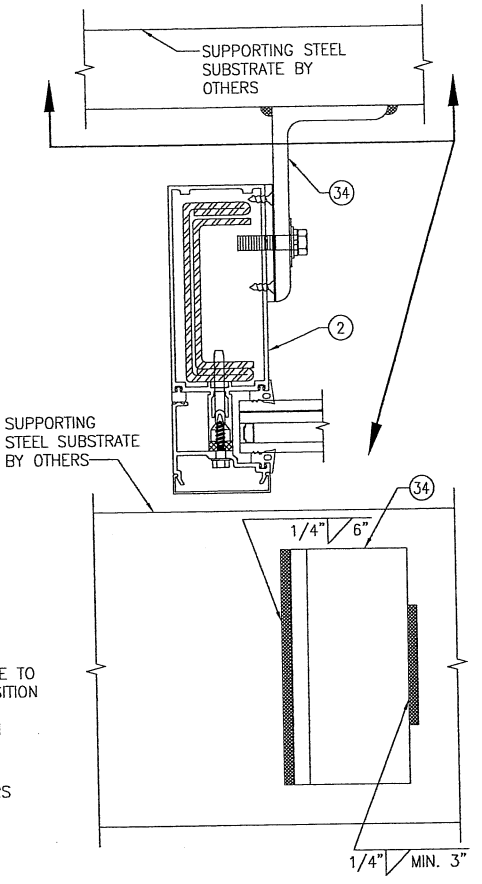

ALTERNATE WELD DETAIL FOR WIND & DEAD LOAD ANCHORS AT SIDE JAMB MEMBERS

SCALE: 1/3 FULL

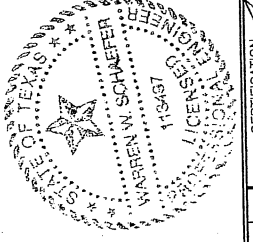

DRAWN BY: W.W.S.	CHECKED BY: W.W.S.
PLOT: 1=3	DATE: 03/19/13

NO.	REVISION DESCRIPTION	BY	DATE

DRAWING TITLE
1600 SYSTEM 2 CURTAIN WALL (S.M.I.)

JOB INFORMATION:
KAWNEER COMPANY, INC.
555 GUTHRIDGE COURT
NORCROSS, GA 30092
770-449-5555

CONSULTANTS
W. W. SCHAEFER ENGINEERING & CONSULTING, P.A. (REG. NO. F-14980)
7480 150TH COURT NORTH
BEACH GARDENS, FL 33418
PHONE: 561-744-3424

CERTIFICATION
SEP 07 2016
WARREN W. SCHAEFER, P.E.
P.E. NO. 113497

DRAWING NO. 1792T
REV. A
SHEET NO. 6 OF 16

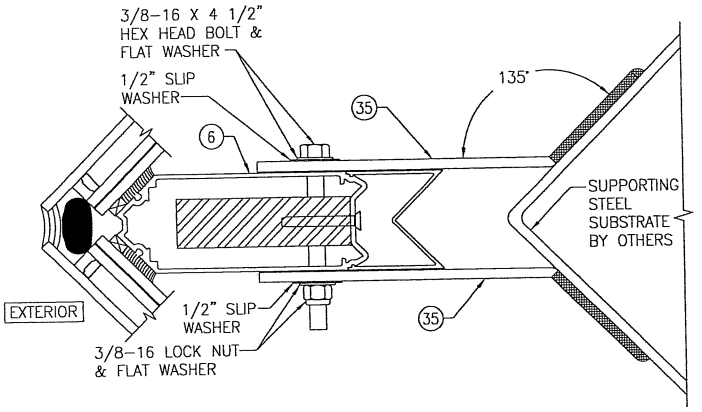

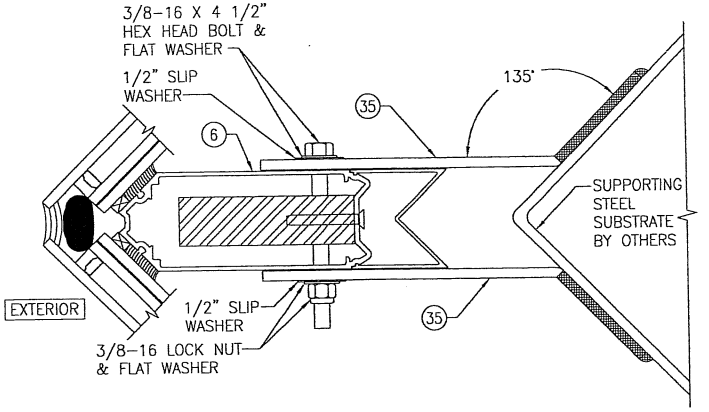

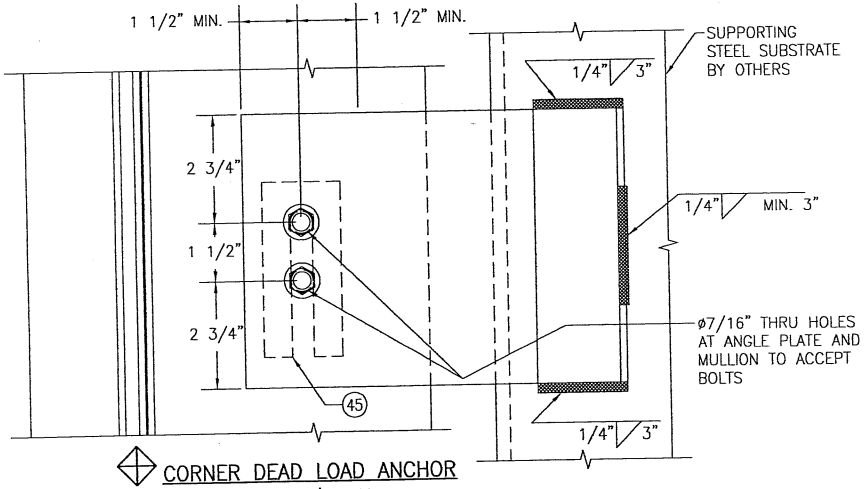

CORNER DEAD LOAD ANCHOR
SCALE: 1/3 FULL

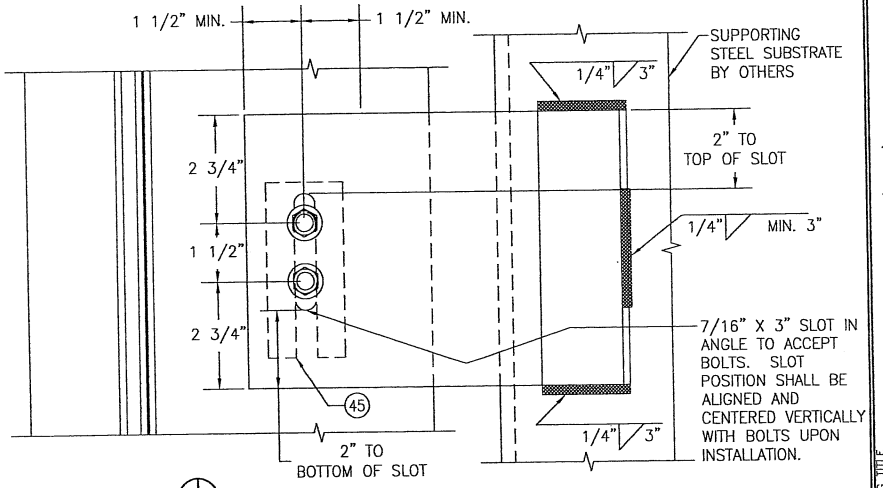

CORNER WIND LOAD ANCHOR
SCALE: 1/3 FULL

NOTE: ALL 3/8" BOLTS CONNECTING ANGLES TO MULLIONS SHALL BE GRADE 5 STEEL OR 300 SERIES STAINLESS STEEL.

FOR ALTERNATE WELDING OF ANGLES TO SUBSTRATE, SEE "ALTERNATE WELD DETAIL" ON SHEET 5.

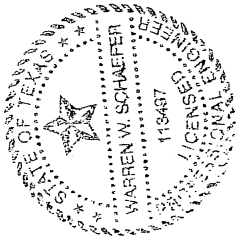

DRAWN BY: W.W.S.	CHECKED BY: W.W.S.
PLOT: 1=3	DATE: 03/19/13

NO.	REVISION DESCRIPTION	BY	DATE

JOB INFORMATION:
KAWNEER COMPANY, INC.
555 GUTHRIDGE COURT
NORCROSS, GA 30092
770-449-5555

DRAWING TITLE
1600 SYSTEM 2 CURTAIN WALL (S.M.I.)

CONSULTANTS
W. W. SCHAEFER ENGINEERING & CONSULTING, P.A. (REG. NO. F-14980)
7480 150TH COURT NORTH
PALM BEACH GARDENS, 33418
PHONE: 561-744-3424

CERTIFICATION
SEP 07 2016
WARREN W. SCHAEFER, P.E.
P.E. NO. 113497

DRAWING NO. 1792T
REV. A
SHEET NO. 7 OF 16

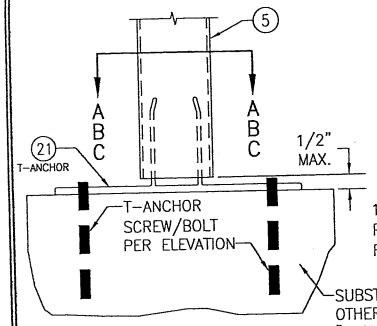

STANDARD T-ANCHOR
SCALE: 1/4 FULL

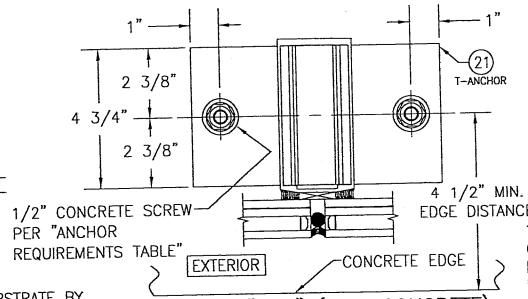

SECTION "A-A" (INTO CONCRETE)
SCALE: 1/4 FULL

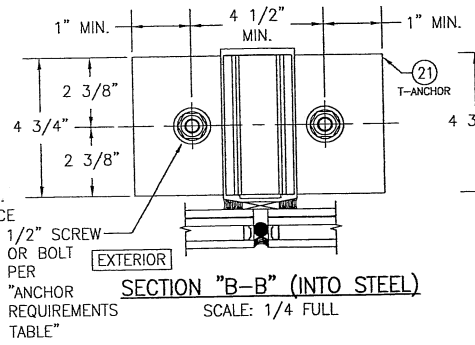

SECTION "B-B" (INTO STEEL)
SCALE: 1/4 FULL

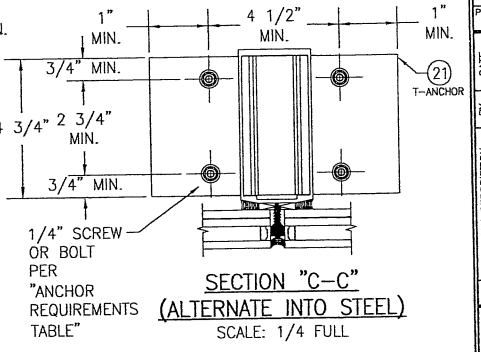

SECTION "C-C"
(ALTERNATE INTO STEEL)
SCALE: 1/4 FULL

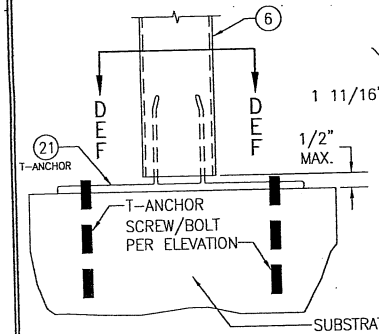

CORNER T-ANCHOR
SCALE: 1/4 FULL

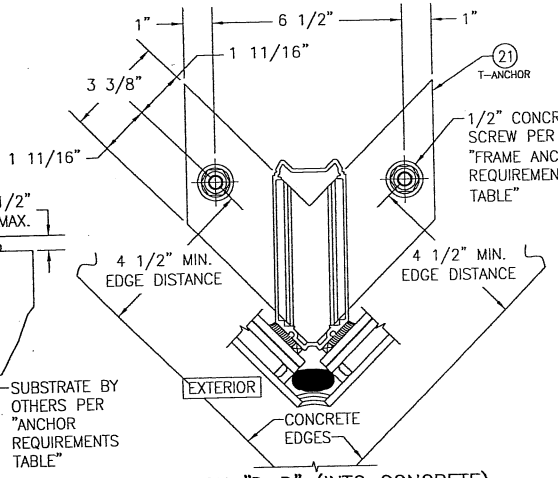

SECTION "D-D" (INTO CONCRETE)
SCALE: 1/4 FULL

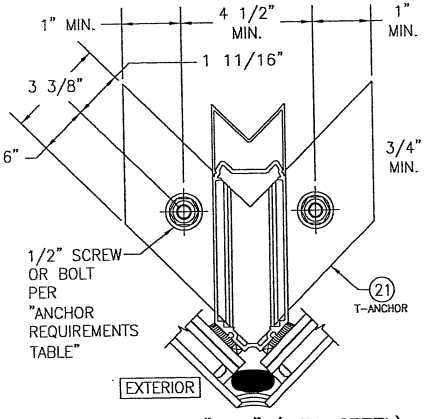

SECTION "E-E" (INTO STEEL)
SCALE: 1/4 FULL

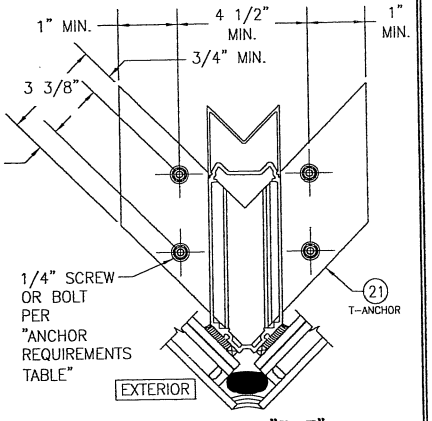

SECTION "F-F"
(ALTERNATE INTO STEEL)
SCALE: 1/4 FULL

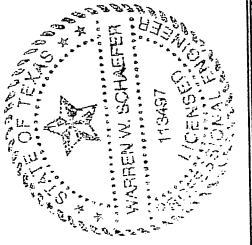

DRAWN BY: W.W.S.	CHECKED BY: W.W.S.
PLOT: 1=4	DATE: 03/19/13

NO.	REVISION DESCRIPTION	BY	DATE

DRAWING TITLE
1600 SYSTEM 2 CURTAIN WALL (S.M.I.)

JOB INFORMATION:
KAWNEER COMPANY, INC.
555 GUTHRIDGE COURT
NORCROSS, GA 30092
770-449-5555

CONSULTANTS
W. W. SCHAEFER ENGINEERING & CONSULTING, P.A. (REG. NO. F-14980)
7480 150TH COURT NORTH
PALM BEACH GARDENS, FL 33418
PHONE: 561-744-3424

CERTIFICATION
SEP 07 2016
WARREN W. SCHAEFER, P.E.
P.E. NO. 113497

DRAWING NO. 1792T
REV. A
SHEET NO. 8 OF 16

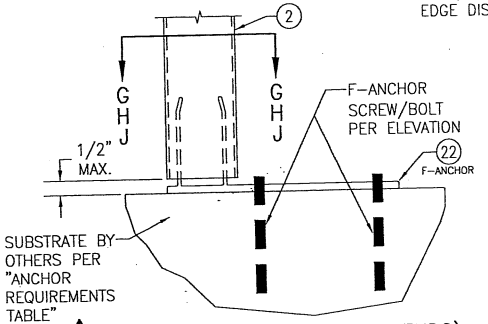

F-ANCHOR (FRAME MEMBER ENDS)

SCALE: 1/4 FULL

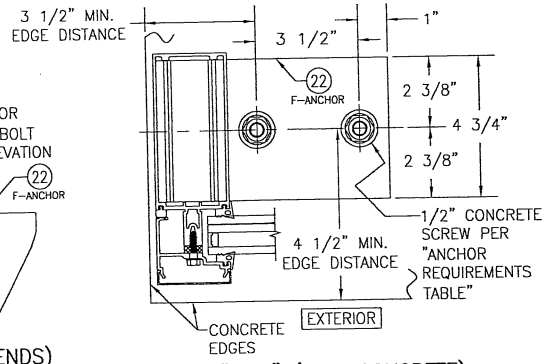

SECTION "G-G" (INTO CONCRETE)

SCALE: 1/4 FULL

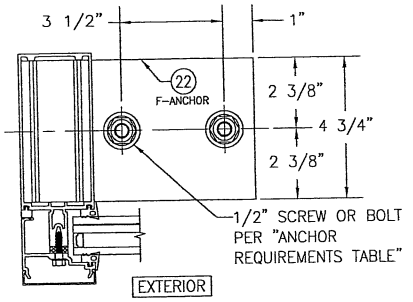

SECTION "H-H" (INTO STEEL)

SCALE: 1/4 FULL

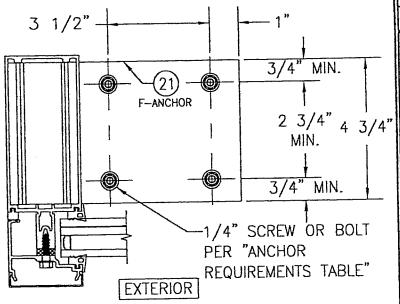

SECTION "J-J"
(ALTERNATE INTO STEEL)

SCALE: 1/4 FULL

DRAWN BY: W.W.S.	CHECKED BY: W.W.S.
PLOT: 1=#	DATE: 03/19/13

NO.	REVISION DESCRIPTION	BY	DATE

DRAWING TITLE
1600 SYSTEM 2 CURTAIN WALL (S.M.I.)

JOB INFORMATION:
KAWNEER COMPANY, INC.
555 GUTHRIDGE COURT
NORCROSS, GA 30092
770-449-5555

CONSULTANTS
W. W. SCHAEFER ENGINEERING & CONSULTING, P.A. (REG. NO. F-14980)
7480 150TH COURT NORTH
PALM BEACH GARDENS, FL 33418
PHONE: 561-744-3424

CERTIFICATION
SEP 07 2016
WARREN W. SCHAEFER, P.E.
P.E. NO. 113497

STATE OF TEXAS
WARREN W. SCHAEFER
113497
LICENSED
PROFESSIONAL ENGINEER

DRAWING NO. 1792T
REV. A
SHEET NO. 9 OF 16

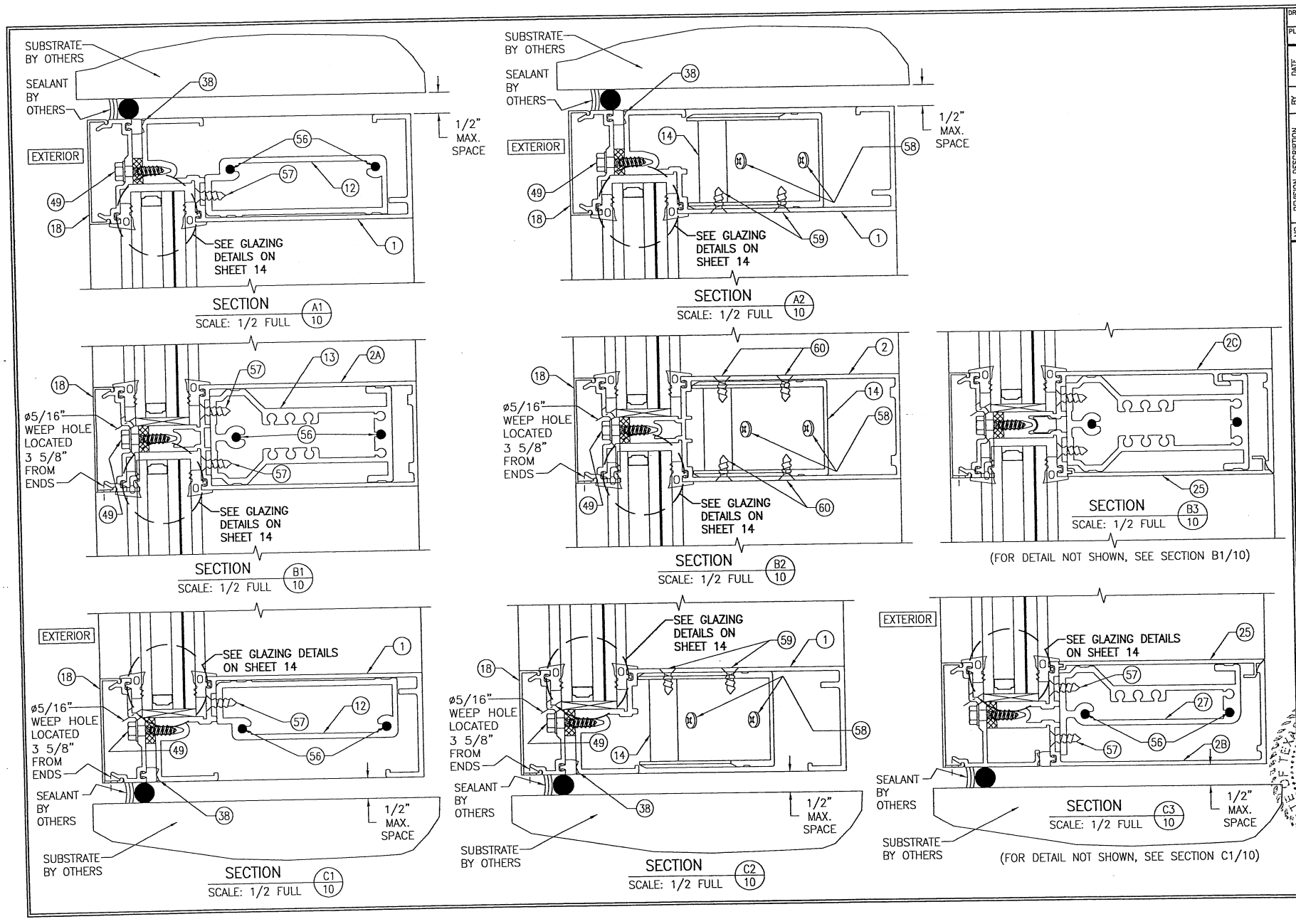

DRAWN BY: W.W.S.
CHECKED BY: W.W.S.
PLOT: 1=2
DATE: 03/19/13

NO.	REVISION DESCRIPTION	BY	DATE

JOB INFORMATION:
KAWNEER COMPANY, INC.
555 GUTHRIDGE COURT
NORCROSS, GA 30092
770-449-5555

DRAWING TITLE
1600 SYSTEM 2 CURTAIN WALL (S.M.I.)

CONSULTANTS
W. W. SCHAEFER ENGINEERING & CONSULTING, P.A. (REG. NO. F-14980)
7480 150TH COURT NORTH
PALM BEACH GARDENS, FL 33418
PHONE: 561-744-3424

CERTIFICATION
SEP 07 2016
WARREN W. SCHAEFER
WARREN W. SCHAEFER, P.E.
P.E. NO. 113497

DRAWING NO. 1792T
REV. A
SHEET NO. 10 OF 16

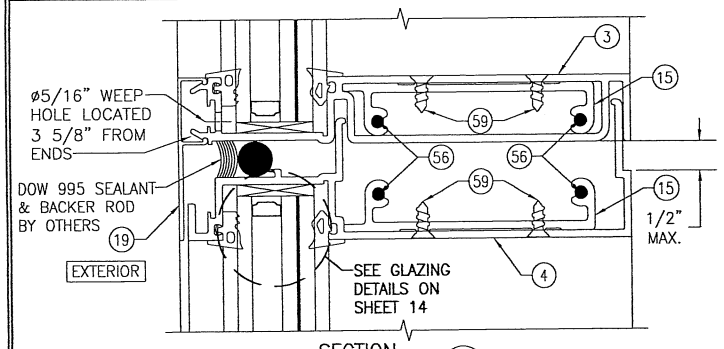

SECTION D1/11
SCALE: 1/2 FULL

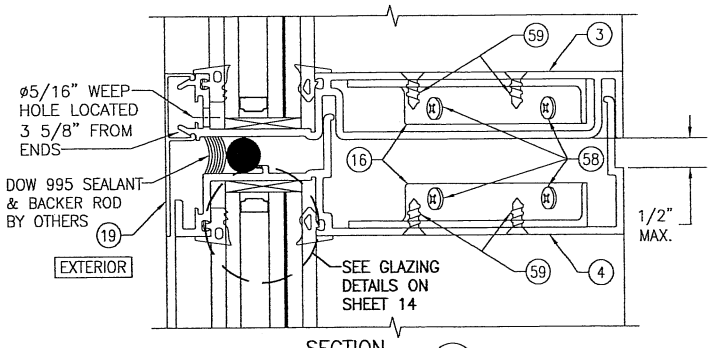

SECTION D2/11
SCALE: 1/2 FULL

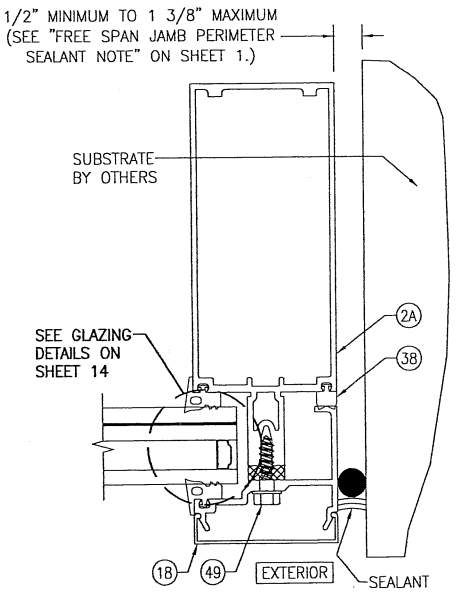

SECTION E1/11
SCALE: 1/2 FULL

VERTICAL SIDE JAMB FRAME MEMBER WITH NO REINFORCEMENT

I = 14.718 IN^4
S = 3.706 IN^3

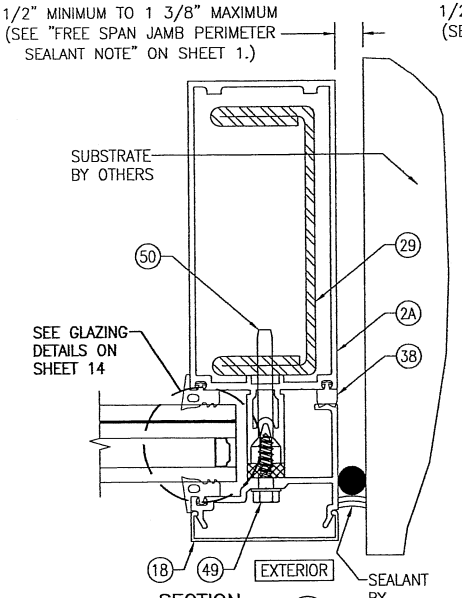

SECTION E2/11
SCALE: 1/2 FULL

VERTICAL SIDE JAMB FRAME MEMBER WITH REINFORCEMENT R1

I = 33.707 IN^4
S = 7.993 IN^3
(TRANSFORMED SECTION PROPERTIES IN TERMS OF ALUMINUM)

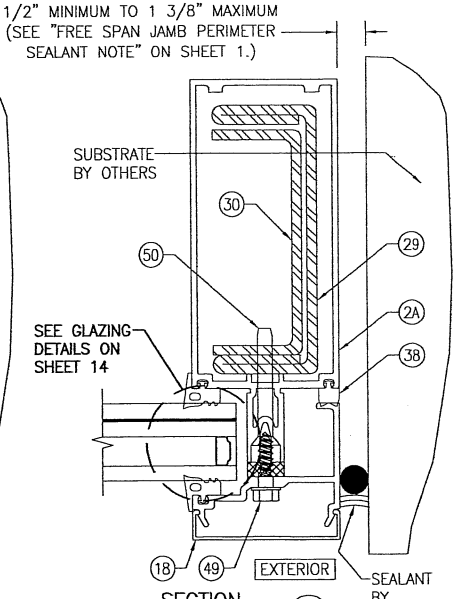

SECTION E3/11
SCALE: 1/2 FULL

VERTICAL SIDE JAMB FRAME MEMBER WITH REINFORCEMENT R2

I = 40.379 IN^4
S = 9.325 IN^3
(TRANSFORMED SECTION PROPERTIES IN TERMS OF ALUMINUM)

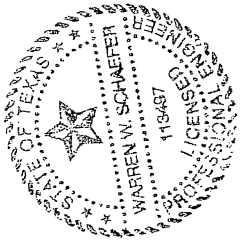

NO.	REVISION DESCRIPTION	BY	DATE

DRAWN BY: W.W.S. | CHECKED BY: W.W.S.
PLOT: 1=2 | DATE: 03/19/13

DRAWING TITLE: 1600 SYSTEM 2 CURTAIN WALL (S.M.I.)

JOB INFORMATION: KAWNEER COMPANY, INC.
555 GUTHRIDGE COURT
NORCROSS, GA 30092
770-449-5555

CONSULTANTS
W. W. SCHAEFER ENGINEERING & CONSULTING, P.A. (REG. NO. F-14980)
7480 150TH COURT NORTH
PALM BEACH GARDENS, FL 33418
PHONE: 561-744-3424

CERTIFICATION
SEP 07 2016
WARREN W. SCHAEFER P.E.
P.E. NO. 113497

DRAWING NO. 1792T | REV. A
SHEET NO. 11 OF 16

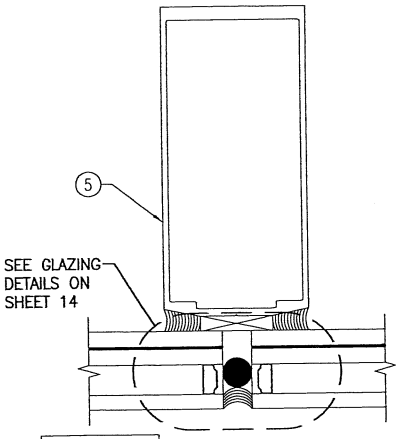

SECTION F1/12
SCALE: 1/2 FULL

VERTICAL INTERMEDIATE FRAME MEMBER WITH NO REINFORCEMENT

I = 7.559 IN^4
S = 2.635 IN^3

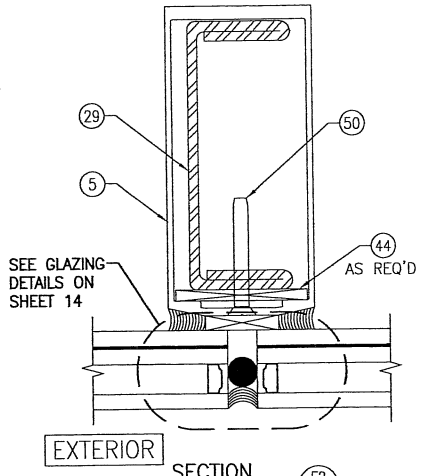

SECTION F2/12
SCALE: 1/2 FULL

VERTICAL INTERMEDIATE FRAME MEMBER WITH REINFORCEMENT R1

I = 23.971 IN^4
S = 9.059 IN^3
(TRANSFORMED SECTION PROPERTIES IN TERMS OF ALUMINUM)

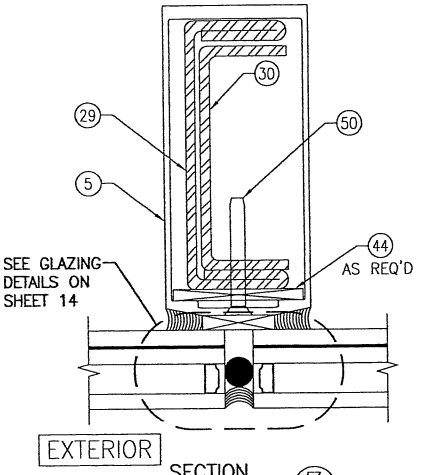

SECTION F3/12
SCALE: 1/2 FULL

VERTICAL INTERMEDIATE FRAME MEMBER WITH REINFORCEMENT R2

I = 30.342 IN^4
S = 11.485 IN^3
(TRANSFORMED SECTION PROPERTIES IN TERMS OF ALUMINUM)

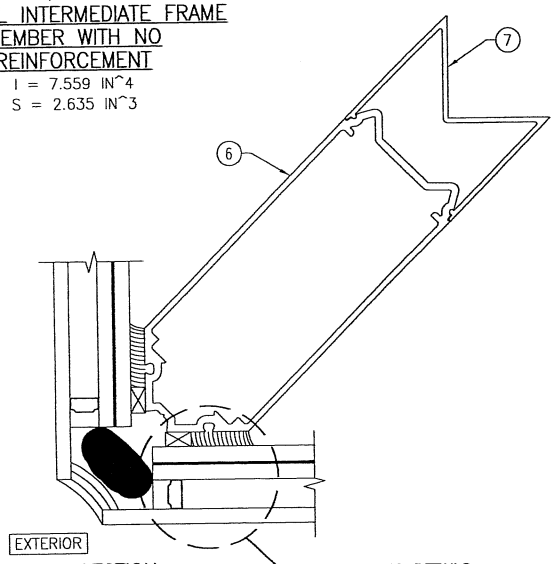

SECTION G1/12
SCALE: 1/2 FULL

VERTICAL CORNER/FRAME MEMBER WITH NO REINFORCEMENT

I = 9.685 IN^4 ← NOTE: "I" & "S" VALUES ARE TAKEN IN THE PLANE OF THE MULLION
S = 2.951 IN^3

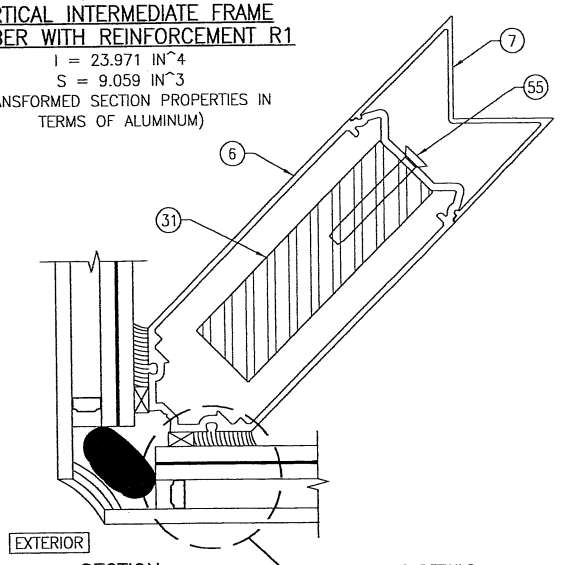

SECTION G2/12
SCALE: 1/2 FULL

VERTICAL CORNER/FRAME MEMBER WITH REINFORCEMENT R3

I = 37.376 IN^4 ← NOTE: "I" & "S" VALUES ARE TAKEN IN THE PLANE OF THE MULLION
S = 10.029 IN^3

(TRANSFORMED SECTION PROPERTIES IN TERMS OF ALUMINUM)

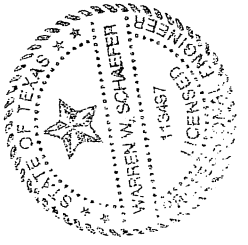

DRAWN BY: W.W.S.	CHECKED BY: W.W.S.
PLOT: 1=2	DATE: 03/19/13

NO.	REVISION DESCRIPTION	BY	DATE

DRAWING TITLE
1600 SYSTEM 2 CURTAIN WALL (S.M.I.)

JOB INFORMATION:
KAWNEER COMPANY, INC.
555 GUTHRIDGE COURT
NORCROSS, GA 30092
770-449-5555

CONSULTANTS
W. W. SCHAEFER ENGINEERING & CONSULTING, P.A. (REG. NO. F-14980)
7480 150TH COURT NORTH
PALM BEACH GARDENS, FL 33418
PHONE: 561-744-3424

CERTIFICATION
SEP 07 2016
WARREN W. SCHAEFER, P.E.
P.E. NO. 113497

DRAWING NO. 1792T
REV. A
SHEET NO. 12 OF 16

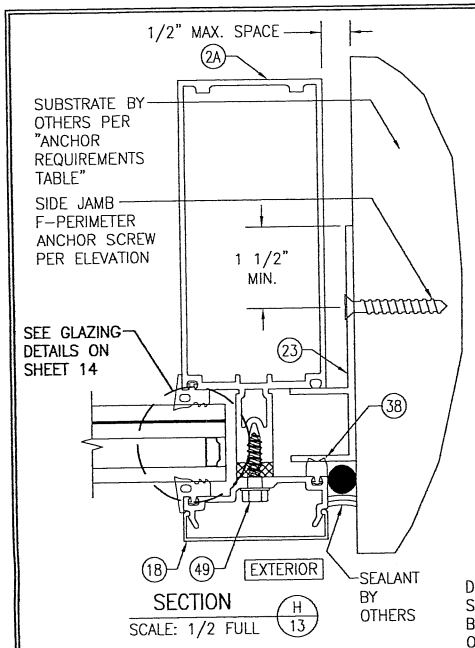

SECTION H/13
SCALE: 1/2 FULL

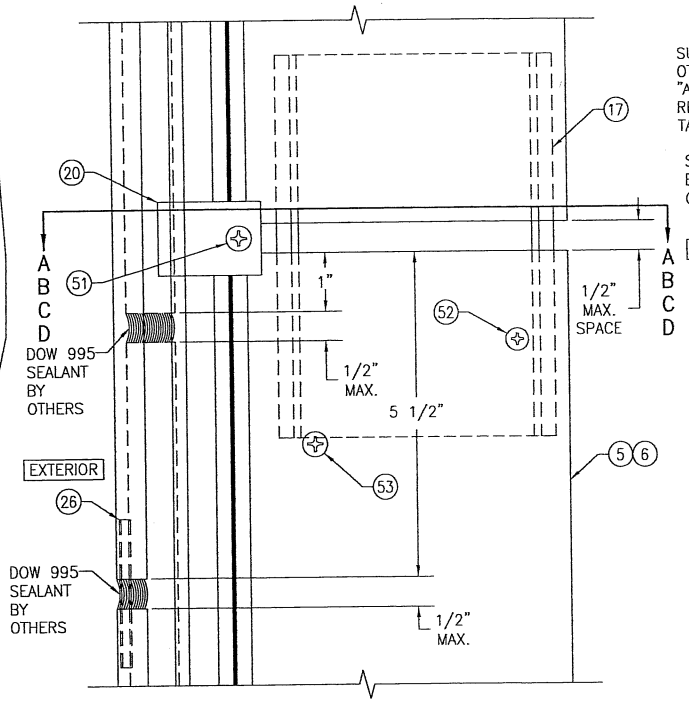

SPLICE JOINT DETAIL

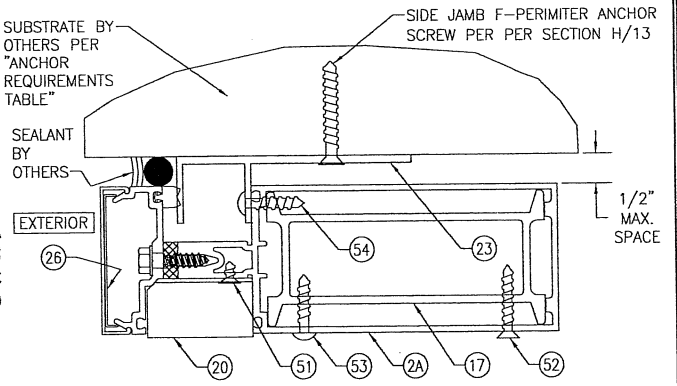

SECTION A-A
(CONTINUOUS F-PERIMETER ANCHOR JAMB CONDITION)
(FOR DETAIL NOT SHOWN, SEE SECTION H/13)

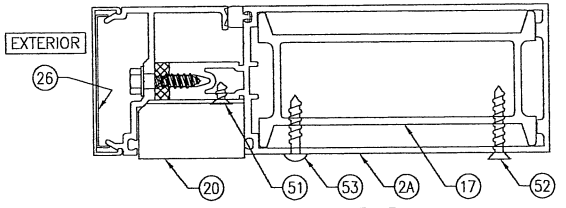

SECTION B-B
(STANDARD JAMB CONDITION)
(FOR DETAIL NOT SHOWN, SEE SECTION C1/11, C2/11 & C3/11)

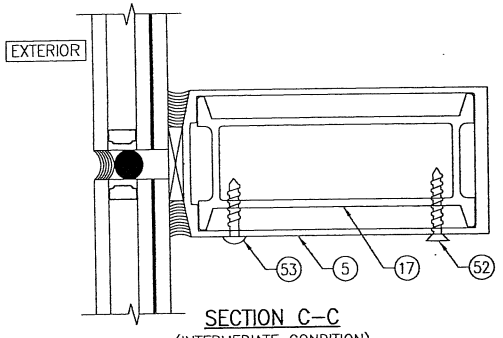

SECTION C-C
(INTERMEDIATE CONDITION)
(FOR DETAIL NOT SHOWN, SEE SECTION F1/12, F2/12 & F3/12)

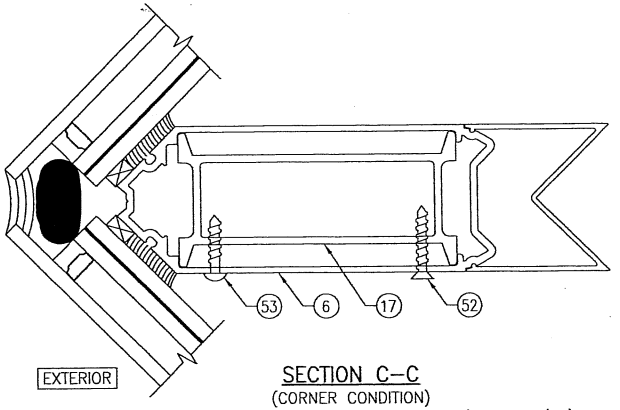

SECTION C-C
(CORNER CONDITION)
(FOR DETAIL NOT SHOWN, SEE SECTION G1/12 & G2/12)

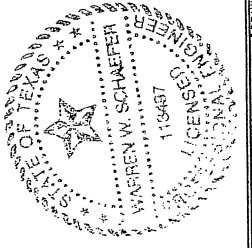

DRAWN BY: W.W.S.	CHECKED BY: W.W.S.
PLOT: 1=2	DATE: 03/19/13

NO.	REVISION DESCRIPTION	BY	DATE

JOB INFORMATION:
KAWNEER COMPANY, INC.
555 GUTHRIDGE COURT
NORCROSS, GA 30092
770-449-5555

DRAWING TITLE
1600 SYSTEM 2 CURTAIN WALL (S.M.I.)

CONSULTANTS
W. W. SCHAEFER ENGINEERING & CONSULTING, P.A. (REG. NO. F-14980)
7480 150TH COURT NORTH
PALM BEACH GARDENS, FL 33418
PHONE: 561-744-3424

CERTIFICATION
SEP 07 2016
WARREN W. SCHAEFER, P.E.
P.E. NO. 113497

DRAWING NO. 1792T
REV. A
SHEET NO. 13 OF 16

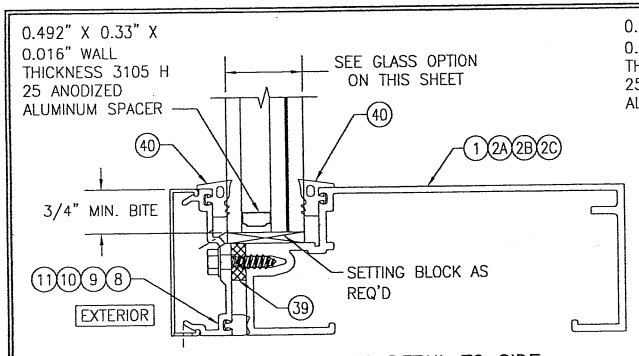

TYPICAL GLAZING DETAIL TO SIDE JAMB & HORIZONTAL FRAMING

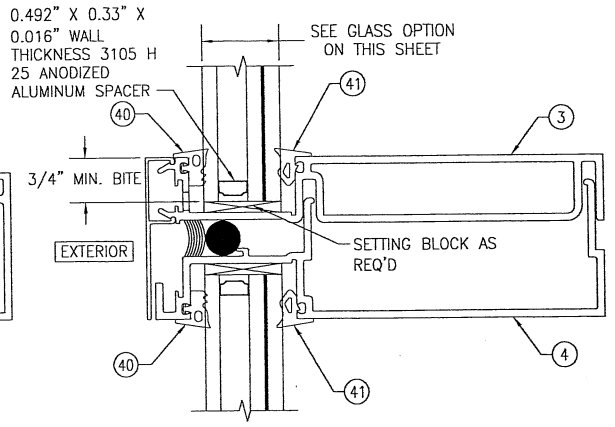

TYPICAL GLAZING DETAIL TO SPLICE JOINT FRAMING

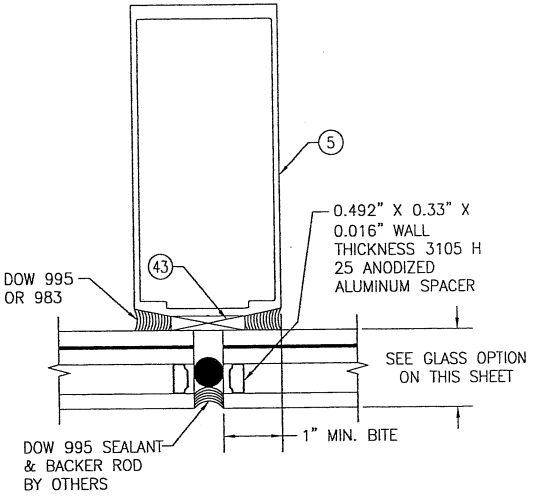

TYPICAL GLAZING DETAIL TO VERTICAL INTERMEDIATE FRAMING

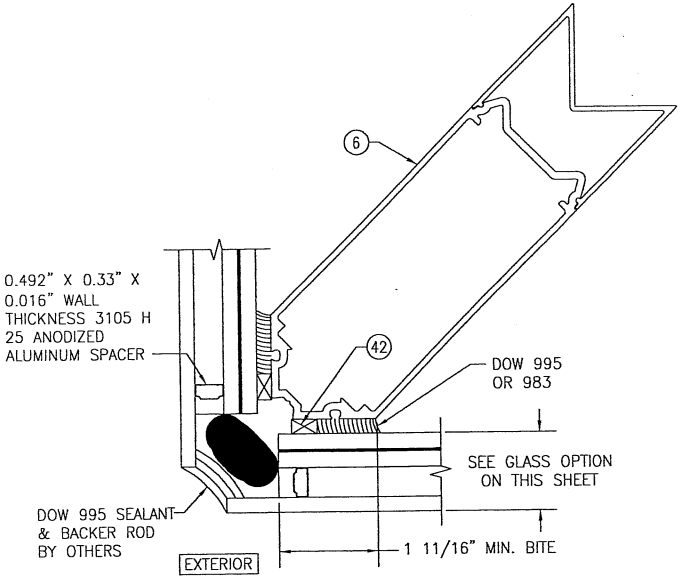

TYPICAL GLAZING DETAIL TO CORNER FRAMING

GLASS OPTION:

OPTION 1: 1 5/16" THICK I.G LAMINATED GLASS (1/4" TEMPERED EXTERIOR; 1/2" AIR SPACE; 1/4" HT. ST./0.060" EASTMAN CHEM. CO. SAFLEX/1/4" HT. ST. INTERIOR)

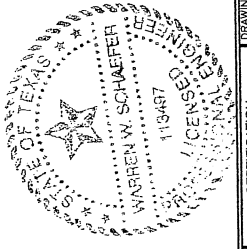

DRAWN BY: W.W.S.	CHECKED BY: W.W.S.
PLOT: 1=2	DATE: 03/19/13

NO.	REVISION DESCRIPTION	BY	DATE

DRAWING TITLE
1600 SYSTEM 2 CURTAIN WALL (S.M.I.)

JOB INFORMATION:
KAWNEER COMPANY, INC.
555 GUTHRIDGE COURT
NORCROSS, GA 30092
770-449-5555

CONSULTANTS
W. W. SCHAEFER ENGINEERING & CONSULTING, P.A. (REG. NO. F-14980)
7480 150TH COURT NORTH
PALM BEACH GARDENS, FL 33418
PHONE: 561-744-3424

CERTIFICATION
SEP 07 2016
WARREN W. SCHAEFER, P.E.
P.E. NO. 113497

DRAWING NO. 1792T
REV. A
SHEET NO. 14 OF 16

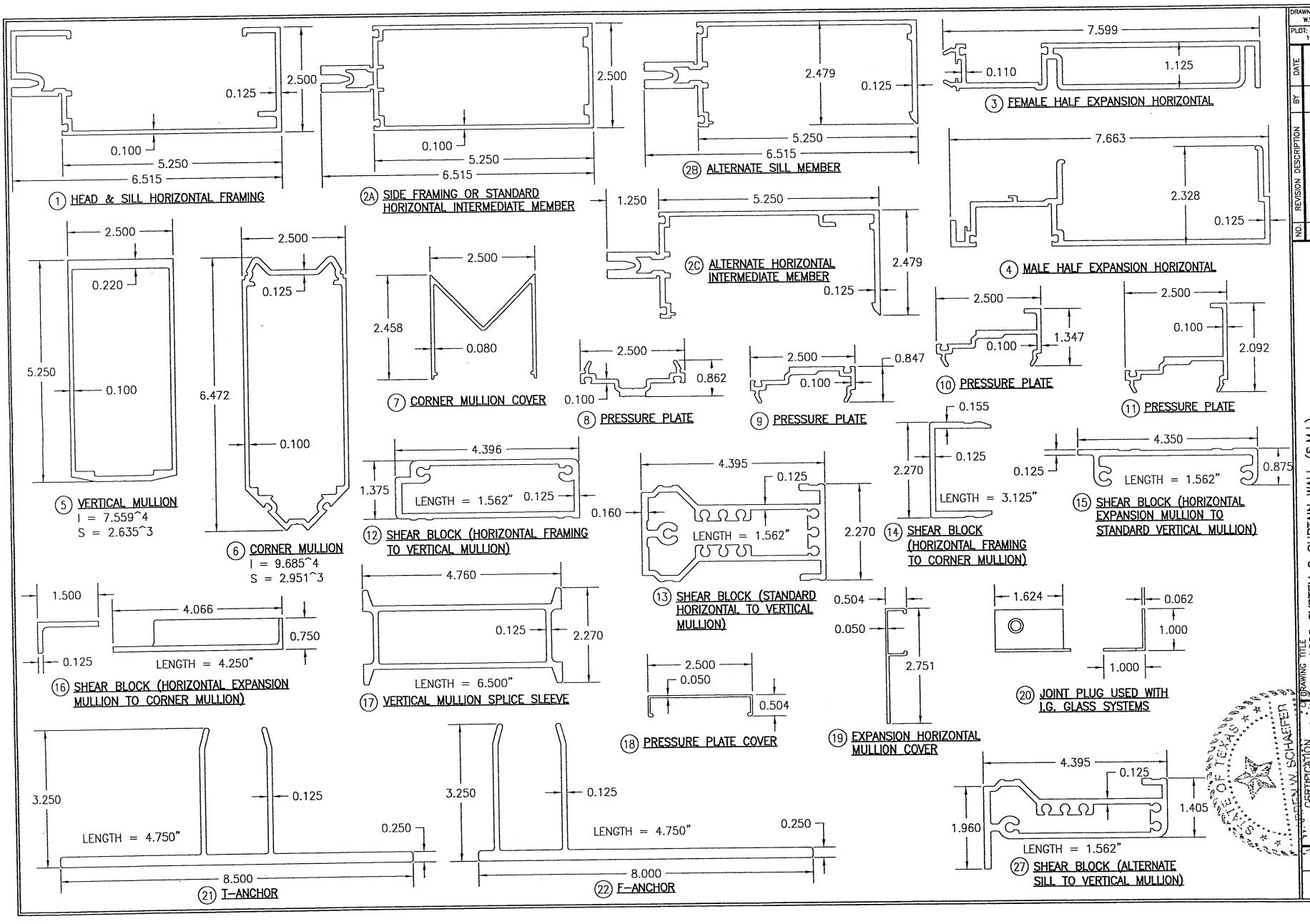

NO.	REVISION DESCRIPTION	BY	DATE

DRAWN BY: W.W.S.
CHECKED BY: W.W.S.
PLOT: 1=2
DATE: 03/19/13

DRAWING TITLE: 1600 SYSTEM 2 CURTAIN WALL (S.M.I.)

JOB INFORMATION: KAWNEER COMPANY, INC. 555 GUTHRIDGE COURT NORCROSS, GA 30092 770-449-5555

CONSULTANTS: W. W. SCHAEFER ENGINEERING & CONSULTING, P.A. (REG. NO. F-14980) 7480 150TH COURT NORTH PALM BEACH GARDENS, FL 33418 PHONE: 561-744-3424

WARREN W. SCHAEFER, P.E. P.E. NO. 11347

CERTIFICATION: WARREN W. SCHAEFER 11347 STATE OF FLORIDA PROFESSIONAL ENGINEER SEP 07 2016

DRAWING NO. 1792T REV. A

SHEET NO. 15 OF 16

ITEM #	ITEM DESCRIPTION	MANUFACTURER/NOTES
	PARTS	
1	HEAD & SILL HORIZONTAL FRAMING	6063–T6 ALUMINUM
2A	SIDE FRAMING OR STANDARD HORIZONTAL INTERMEDIATE MEMBER	6063–T6 ALUMINUM
2B	ALTERNATE SILL MEMBER	6063–T6 ALUMINUM
2C	ALTERNATE HORIZONTAL INTERMEDIATE MEMBER	6063–T6 ALUMINUM
3	FEMALE HALF EXPANSION HORIZONTAL	6063–T6 ALUMINUM
4	MALE HALF EXPANSION HORIZONTAL	6063–T6 ALUMINUM
5	VERTICAL MULLION	6063–T6 ALUMINUM
6	CORNER MULLION	6063–T6 ALUMINUM
7	CORNER MULLION COVER	6063–T6 ALUMINUM
8	PRESSURE PLATE	6063–T6 ALUMINUM
9	PRESSURE PLATE	6063–T6 ALUMINUM
10	PRESSURE PLATE	6063–T6 ALUMINUM
11	PRESSURE PLATE	6063–T6 ALUMINUM
12	SHEAR BLOCK (HORIZONTAL FRAMING TO STANDARD VERTICAL MULLION)	6063–T6 ALUMINUM
13	SHEAR BLOCK (STANDARD HORIZONTAL TO STANDARD VERTICAL MULLION)	6063–T6 ALUMINUM
14	SHEAR BLOCK (HORIZONTAL FRAMING TO CORNER MULLION)	6063–T6 ALUMINUM
15	SHEAR BLOCK (HORIZONTAL EXPANSION MULLION TO STANDARD VERTICAL MULLION)	6063–T6 ALUMINUM
16	SHEAR BLOCK (HORIZONTAL EXPANSION MULLION TO CORNER MULLION)	6063–T6 ALUMINUM
17	VERTICAL MULLION SPLICE SLEEVE	6063–T6 ALUMINUM
18	PRESSURE PLATE COVER	6063–T6 ALUMINUM
19	EXPANSION HORIZONTAL MULLION COVER	6063–T6 ALUMINUM
20	JOINT PLUG	6063–T6 ALUMINUM
21	T–ANCHOR	6063–T6 ALUMINUM
22	F–ANCHOR	6063–T6 ALUMINUM
23	F–PERIMETER ANCHOR	6063–T6 ALUMINUM
24	ANCHOR PLATE	6063–T6 ALUMINUM
25	ALTERNATE SILL & HORIZONTAL INTERMEDIATE MEMBER COVER	6063–T6 ALUMINUM
26	COVER SPLICE	5005 H32 ALUMINUM
27	SHEAR BLOCK (ALT. SILL TO VERTICAL MULLION)	6063–T6 ALUMINUM
29	MULLION REINFORCEMENT	ASTM A1011 GRADE 50 STEEL
30	MULLION REINFORCEMENT	ASTM A1011 GRADE 50 STEEL
31	CORNER MULLION REINFORCEMENT	ASTM A36 STEEL
34	5" X 3" X 3/8" X 6" LONG ANGLE	50 KSI STEEL
35	8" X 3" X 3/8" X 6" LONG BENT PLATE	50 KSI STEEL
	SEALS & SEALANTS	
38	FIXED GASKET	TREMCO TR4726P EPDM DUROMETER 70 +/–5
39	THERMAL SEPERATOR	TREMCO TR–4015P EPDM DUROMETER 60 +/–5
40	EXTERIOR GLAZING FIXED GASKET	TREMCO TR–4014P EPDM DUROMETER 60 +/–5
41	INTERIOR GLAZING FIXED GASKET	TREMCO TX–4305P EPDM DUROMETER 70 +/–5
43	1/4" X 1" GLAZING TAPE	NORTON V2100 FOAM OR TREMCO 920
44	3/16" X 2 1/4" SHIM	PLASTIC, STTEL OR ALUMINUM
45	STEEL TO ALUMINUM SEPERATOR	THERMO–TOK TN–9004

ITEM #	ITEM DESCRIPTION	MANUFACTURER/NOTES
	FASTENERS	
49	1/4" X 1" HWHTF TYPE AB SCREW 300 SERIES S.S.	WITHIN 3" FROM ENDS & 9" MAX. O.C.
50	1/4–20 X 2" FNTCS 300 SERIES S.S.	WITHIN 9" FROM ENDS & 9" MAX. O.C.
51	NO. 10 X 3/8" FHTFS 300 SERIES S.S.	1 PER JOINT PLUG
52	10–16 X 1 1/4" FHSDS 300 SERIES S.S.	1 PER VERTICAL MULLION SPLICE SLEEVE
53	NO. 12 X 1" PHTFS 300 SERIES S.S.	1 PER VERTICAL MULLION SPLICE SLEEVE
54	NO. 12 X 1" PHTFS 300 SERIES S.S.	2 ABOVE SPLICE; WITHIN 3" OF END 3" O.C.
55	1/4–20 X 2" FNTCS 300 SERIES S.S.	WITHIN 9" FROM ENDS & 24" MAX. O.C.
56	NO. 12 X 1 7/8" PHTFS 300 SERIES S.S.	2 PER SHEAR BLOCK
57	NO. 12 X 7/8" FHTFS 300 SERIES S.S.	2 PER SHEAR BLOCK
58	NO. 12 X 7/16" PHTFS 300 SERIES S.S.	2 PER SHEAR BLOCK
59	NO. 12 X 1/2" FHTFS 300 SERIES S.S.	2 PER SHEAR BLOCK
60	NO. 12 X 1/2" FHTFS 300 SERIES S.S.	4 PER SHEAR BLOCK
61	NO. 10 X 5/8" FHTF 300 SERIES S.S.	6 PER PLATE

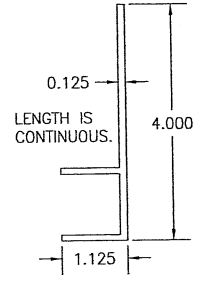

(23) F–PERIMETER ANCHOR

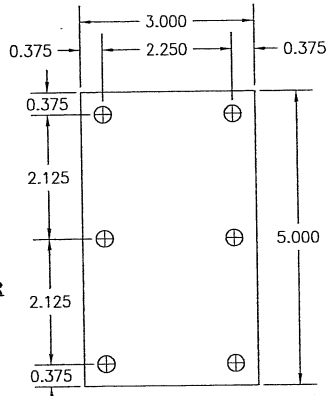

(24) ANCHOR PLATE
3/16" THICK

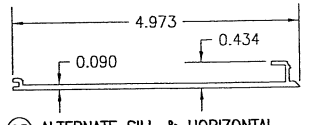

(25) ALTERNATE SILL & HORIZONTAL INTERMEDIATE MEMBER COVER

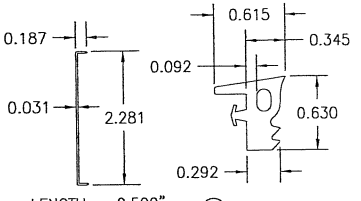

(26) COVER SPLICE

(40) EXTERIOR GLAZING FIXED GASKET

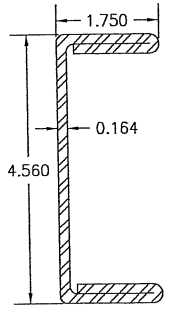

(29) MULLION REINFORCEMENT
I = 5.667 IN^4
S = 2.485 IN^3

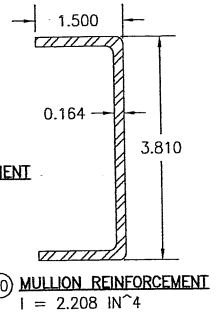

(30) MULLION REINFORCEMENT
I = 2.208 IN^4
S = 1.159 IN^3

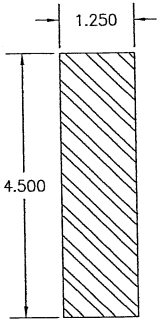

(31) CORNER MULLION REINFORCEMENT
I = 9.492 IN^4
S = 4.219 IN^3

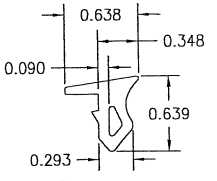

(41) INTERIOR GLAZING FIXED GASKET

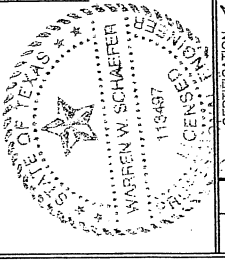

DRAWN BY: W.W.S.	CHECKED BY: W.W.S.
PLOT: 1=2	DATE: 03/19/13

NO.	REVISION DESCRIPTION	BY	DATE

DRAWING TITLE
1600 SYSTEM 2 CURTAIN WALL (S.M.I.)

JOB INFORMATION:
KAWNEER COMPANY, INC.
555 GUTHRIDGE COURT
NORCROSS, GA 30092
770–449–5555

CONSULTANTS
W. W. SCHAEFER ENGINEERING & CONSULTING, P.A. (REG. NO. F–14980)
7480 150TH COURT NORTH
PALM BEACH GARDENS, FL 33418
PHONE: 561–744–3424

CERTIFICATION
SEP 07 2016
WARREN W. SCHAEFER, P.E.
P.E. NO. 113497

DRAWING NO. 1792T
REV. A
SHEET NO. 16 OF 16