GENERAL NOTES:

1. THESE STORE FRONT SYSTEMS HAVE BEEN TESTED, ANALYZED & APPROVED FOR DESIGN PRESSURES NOT TO EXCEED THOSE SHOWN IN THE "ALLOWABLE DESIGN PRESSURE TABLE(S).
2. OPENINGS, BUCKING & BUCKING FASTENERS MUST BE PROPERLY DESIGNED & INSTALLED TO TRANSFER WIND LOADS TO THE STRUCTURE.
3. ALL HARDWARE & FASTENERS SHALL BE IN ACCORDANCE WITH THESE DRAWINGS & SHALL NOT VARY UNLESS SPECIFICALLY MENTIONED ON THE DRAWINGS. SPECIFIED ANCHOR EMBED TO BASE MATERIAL SHALL BE BEYOND WALL FINISH OR STUCCO.
4. THE DETAILS & SPECIFICATIONS SHOWN HEREIN REPRESENT THE PRODUCTS TESTED & PROPOSED FOR WATER, AIR, IMPACT, CYCLIC & UNIFORM STATIC AIR PRESSURE TESTING IN CONFORMANCE WITH ASTM E330, E283, E331, E1886 & E1996 FOR SMALL MISSILE IMPACT WINDOWS.
5. THESE STORE FRONT SYSTEMS HAVE BEEN DESIGNED IN ACCORDANCE WITH AND MEET THE REQUIREMENTS OF THE INTERNATIONAL BUILDING CODE (IBC).
6. WHEN GLAZED FOR SMALL MISSILE IMPACT, THIS STORE FRONT SYSTEM MAY NOT BE INSTALLED AT ELEVATIONS BELOW 30 FT. ABOVE GRADE WITHOUT AN APPROVED SHUTTER.
7. ALL ANCHORS SECURING STORE FRONT FRAME TO PRESSURE TREATED BUCKS OR WOOD FRAMING SHALL BE CAPABLE OF RESISTING CORROSION CAUSED BY THE PRESSURE TREATING CHEMICALS IN THE WOOD.
8. DETERMINE THE POSITIVE & NEGATIVE DESIGN LOADS TO USE WHEN REFERENCING THESE DOCUMENTS IN ACCORDANCE WITH THE GOVERNING CODE AND GOVERNING WIND VELOCITY. FOR WIND LOAD CALCULATIONS IN ACCORDANCE WITH THE INTERNATIONAL BUILDING CODE, A DIRECTIONALITY FACTOR OF KD = 0.85 MAY BE APPLIED PER THE ASCE-7 STANDARD.
9. NO INCREASE IN ALLOWABLE STRESS HAS BEEN USED IN THE CERTIFICATION OF THIS PRODUCT. WIND LOAD DURATION FACTOR CD = 1.6 WAS USED FOR WOOD SCREW ANALYSIS ONLY.
10. MATERIALS, INCLUDING BUT NOT LIMITED TO STEEL SCREWS, THAT COME INTO CONTACT WITH OTHER DISSIMILAR MATERIALS SHALL BE SEPARATED OR COATED AS REQUIRED TO AVOID CORROSION OF EITHER MATERIAL.

CORNER & FRAME END CONSTRUCTION:

FRAME HEAD CORNER: HEAD IS SQUARE CUT, BUTTED TO SIDE, FASTENED WITH 3 NO. 12 X 1" PHTFS FASTENERS THROUGH THE SIDE MEMBER INTO THE HEAD MEMBER SCREW SPLINES & SEALED WITH SILICONE.

FRAME SILL CORNER: SILL IS SQUARE CUT, BUTTED TO SIDE, FASTENED WITH 3 NO. 12 X 1" PHTFS FASTENERS THROUGH THE SIDE MEMBER INTO THE SILL MEMBER SCREW SPLINES & SEALED WITH SILICONE.

HORIZONTAL FRAME MULLION END: MULLION IS SQUARE CUT, BUTTED TO SIDE, FASTENED WITH 2 NO. 12 X 1" SS PHTFS FASTENERS THROUGH THE SIDE MEMBER INTO THE MULLION MEMBER SCREW SPLINES & SEALED WITH SILICONE.

EVALUATION OF THIS PRODUCT IS BASED ON APPLICABLE STANDARDS AND/OR INFORMATION & RESULTS FROM APPLICABLE TEST REPORTS. THE BUILDING CODE VERSION CONSIDERED WITH THIS EVALUATION WAS THAT IN FORCE AT THE TIME OF THE EVALUATION. IN THE EVENT OF CODE VERSION CHANGES/UPDATES OR IN THE EVENT THAT NEW OR ADDITIONAL TESTING IS COMPLETED ON THIS PRODUCT, PRIOR TO STATING CODE COMPLIANCE, THE MANUFACTURER SHALL CONFIRM WITH THE EVALUATION ENGINEER OF RECORD THAT EVERYTHING SPECIFIED HERE-IN IS CURRENT WITH ALL CURRENT TESTING, CODES AND APPLICABLE STANDARDS.

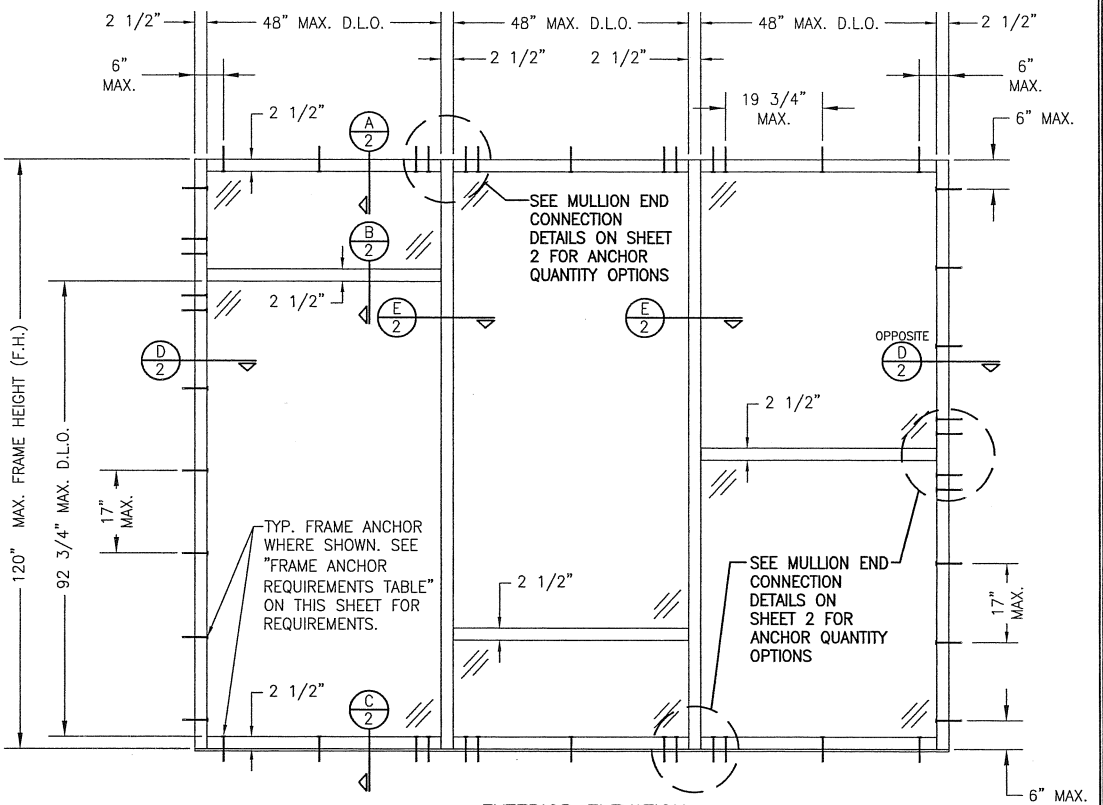

EXTERIOR ELEVATION
MULTIPLE FIXED PANEL STORE FRONT ASSEMBLY

SCALE: 1/2"=1'-0"

HORIZONTAL STACKING & OVERALL UNIT WIDTH IS UNLIMITED PROVIDING D.L.O. DOES NOT EXCEED 48" WIDE AT EACH PANEL. NUMBER OF VERTICAL PANELS IS UNLIMITED BUT MUST FIT INSIDE MAXIMUM FRAME HEIGHT SHOWN.

ALLOWABLE DESIGN PRESSURE
+/-65 PSF

FRAME ANCHOR REQUIREMENTS TABLE

ANCHOR TYPE	OPENING TYPE (SUBSTRATE)	JAMB TO OPENING FASTENER TYPE	MINIMUM EMBED	MINIMUM EDGE DIST.
A	2X_ WOOD FRAME OR BUCK (G=MIN. 0.55)	NO. 12 SMS SCREWS	1 1/4"	3/4"
B	MIN. 1/8" THICK A36 STEEL	(2) 1/4-20 SELF DRILLING/TAPPING SCREW	FULL	3/4"
C	MIN. 3000 P.S.I. CONCRETE	(1) 1/4" CONCRETE SCREW	1 1/2"	2 1/2"
D	MIN. 16 GA. 33 KSI METAL STUD	(2) NO. 12 SELF DRILLING/TAPPING SCREW	FULL	1/2"
E	MIN. C90 BLOCK	(1) 1/4" CONCRETE SCREW	1 1/4"	2 1/2"

(1) CONCRETE SCREWS INTO WOOD SHALL BE ELCO ULTRACONS, ELCO CRETE-FLEX, ITW RAMSET/RED HEAD TAPCONS OR HILTI KWIK-CON II (HARDENED STEEL OR S.S.).
(2) SELF DRILLING & SELF TAPPING SCREWS SHALL BE MIN. GRADE 5 CORRISION RESISTANT STEEL

THESE DRAWINGS ARE APPLICABLE ONLY TO THE PRODUCT SPECIFIED. THEY MAY NOT BE USED FOR THE ASSEMBLY AND/OR INSTALLATION OF ANY OTHER PRODUCT NOR MAY THEY BE USED FOR RATIONAL AND/OR LOCAL APPROVAL OF ANY PRODUCT NOT PRODUCED BY THE MANUFACTURER STATED ON THESE DRAWINGS.

DRAWN BY: W.R.M.	CHECKED BY: W.W.S.
PLOT: 1=24	DATE: 01/29/13

NO.	REVISION DESCRIPTION	BY	DATE

DRAWING TITLE: IR501 ALUMINUM STORE FRONT SYSTEM - SMALL MISSILE IMPACT

JOB INFORMATION: KAWNEER COMPANY, INC. 555 GUTHRIDGE COURT NORCROSS, GA 30092 770-449-5555

CONSULTANTS: W. W. SCHAEFER ENGINEERING & CONSULTING, P.A. (REG. NO. F-14980) 7480 150TH COURT NORTH PALM BEACH GARDENS, FL 33418 PHONE: 561-744-3424

CERTIFICATION: MAR 04 2013 WARREN W. SCHAEFER, P.E. P.E. NO. 113497

DRAWING NO. 1484T REV.

SHEET NO. 1 OF 3

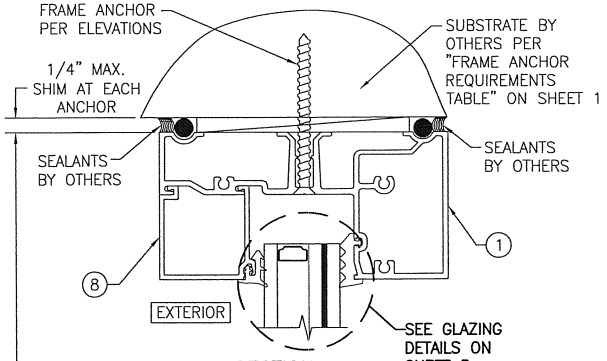

SECTION A/2
SCALE: 1/2 FULL

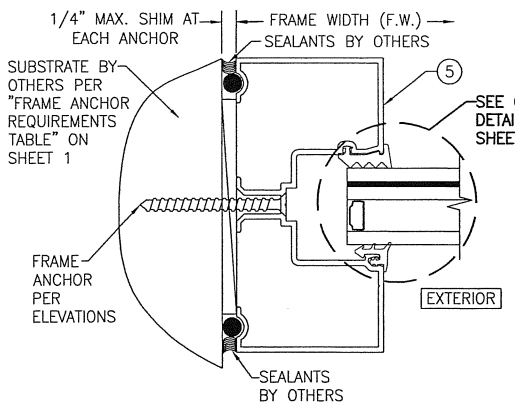

SECTION D/2
SCALE: 1/2 FULL

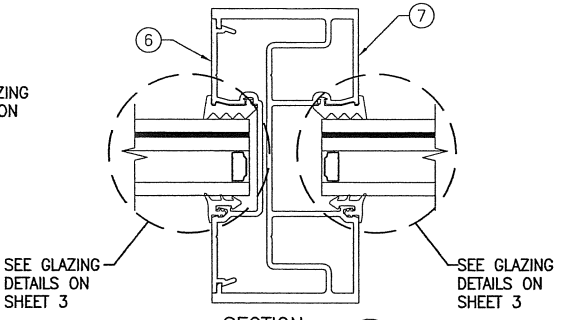

SECTION E/2
SCALE: 1/2 FULL

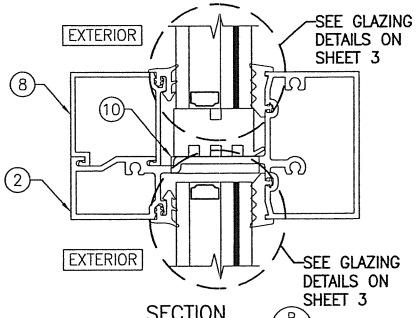

SECTION B/2
SCALE: 1/2 FULL

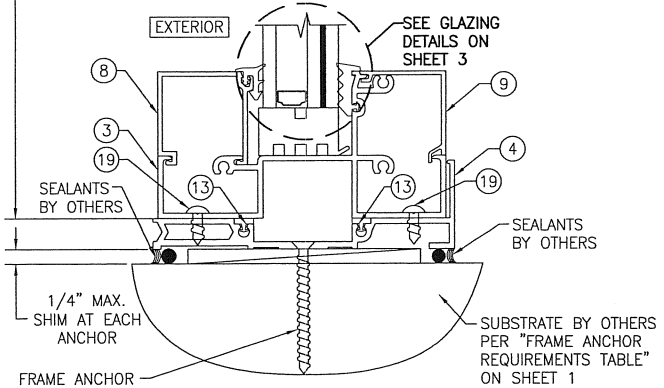

SECTION C/2
SCALE: 1/2 FULL

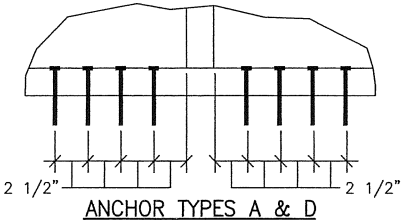

ANCHOR TYPES A & D
(4 ANCHORS EACH SIDE OF MULLION)

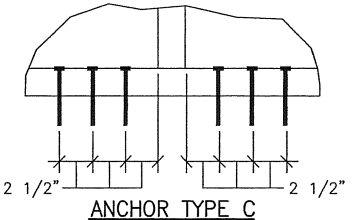

ANCHOR TYPE C
(3 ANCHORS EACH SIDE OF MULLION)

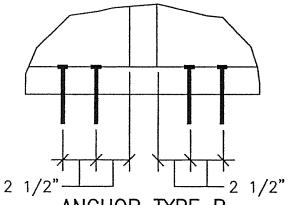

ANCHOR TYPE B
(2 ANCHORS EACH SIDE OF MULLION)

MULLION END CONNECTION DETAILS AT VERTICAL MULLIONS

NOTE: DETAILS SHOWN REFLECT HEAD CONDITIONS. THEY ARE ALSO TYPICAL AT SILL CONDITIONS BETWEEN FIXED PANELS ONLY.

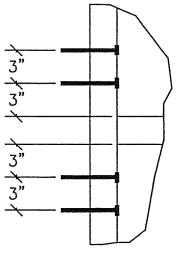

ANCHOR TYPES A & D
(2 ANCHORS EACH SIDE OF MULLION)

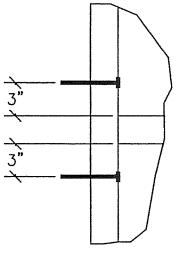

ANCHOR TYPES B, C, & E
(1 ANCHOR EACH SIDE OF MULLION)

MULLION END CONNECTION DETAILS AT HORIZONTAL MULLION ENDS

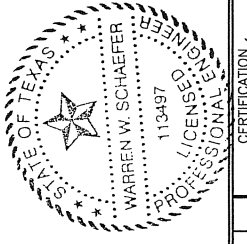

DRAWN BY: W.R.M.	CHECKED BY: W.W.S.
PLOT: 1=2	DATE: 01/29/13

NO.	REVISION DESCRIPTION	BY	DATE

DRAWING TITLE
IR501 ALUMINUM STORE FRONT SYSTEM - SMALL MISSILE IMPACT

JOB INFORMATION:
KAWNEER COMPANY, INC.
555 GUTHRIDGE COURT
NORCROSS, GA 30092
770-449-5555

CONSULTANTS
W. W. SCHAEFER ENGINEERING & CONSULTING, P.A. (REG. NO. F-14980)
7480 150TH COURT NORTH,
PALM BEACH GARDENS, FL 33418
PHONE: 561-744-3424

CERTIFICATION
MAR 04 2013
WARREN W. SCHAEFER, P.E.
P.E. NO. 113497

DRAWING NO. 1484T
REV.
SHEET NO. 2 OF 3

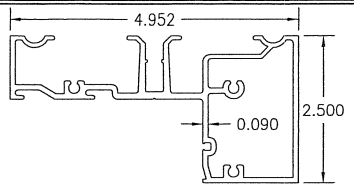

1 HEAD FRAME

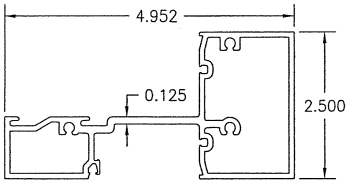

2 HORIZONTAL

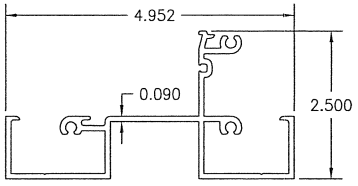

3 HP SILL

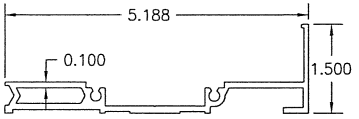

4 HP SILL FLASHING

ITEM #	PART #	ITEM DESCRIPTION	MANUFACTURER/NOTES
		PARTS	
1	575–103	HEAD FRAME	6063–T6 ALUMINUM
2	575–115	HORIZONTAL	6063–T6 ALUMINUM
3	987–032	HP SILL	6063–T6 ALUMINUM
4	987–033	HP SILL FLASHING	6063–T6 ALUMINUM
5	575–101	JAMB	6063–T6 ALUMINUM
6	575–102	POCKET FILLER	6063–T6 ALUMINUM
7	575–116	HW MULLION	6063–T6 ALUMINUM
8	575–104	GLASS STOP	6063–T6 ALUMINUM
9	987–034	HP COVER	6063–T6 ALUMINUM
10	451–105	WATER DEFLECTOR	6063–T6 ALUMINUM
11	–	1/2" I.G. GLASS SPACER	3005 OR 3105 ALUMINUM
		SEALS AND SEALANTS	
13	127–120	SILL TO FLASHING GASKET	CCN SPONGE
14	127–121	INTERIOR FIXED GASKET	EPDM (DUROMETER = SPONGE) BY TREMCO
15	127–127	EXTERIOR PUSH IN GASKET	EPDM (DUROMETER = 70) BY TREMCO
16	127–070	SETTING BLOCK	EPDM
		FASTENERS	
19	128–396	NO. 12 X 7/16" S.S. PHTF	2" FROM ENDS & MAX. 18" O.C.

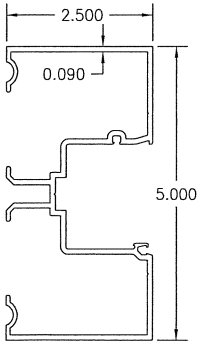

5 JAMB

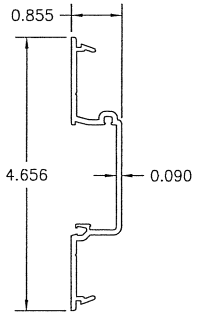

6 POCKET FILLER

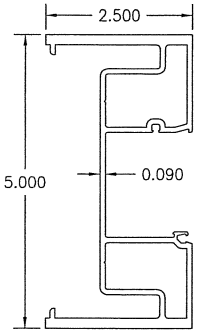

7 HW MULLION

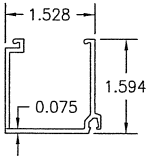

8 GLASS STOP

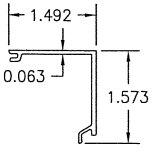

9 HP COVER

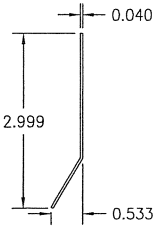

10 WATER DEFLECTOR

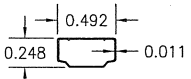

11 1/2" I.G. GLASS SPACER

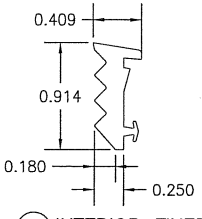

14 INTERIOR FIXED GASKET

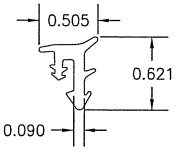

15 EXTERIOR PUSH IN GASKET

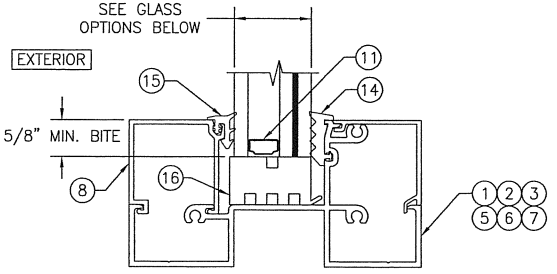

TYP. GLAZING DETAIL

GLASS OPTIONS:

OPTION 1: 1 5/16" THICK LAMINATED GLASS BY SOLUTIA (1/4" TEMPERED/1/2" AIR SPACER/1/4" HT. ST./0.06 SOLUTIA SAFLEX/1/4" HT. ST.)

OPTION 2: 1 5/16" THICK LAMINATED GLASS BY DUPONT (1/4" TEMPERED/1/2" AIR SPACER/1/4" HT. ST./0.06 DUPONT BUTICITE PVB/1/4" HT. ST.)

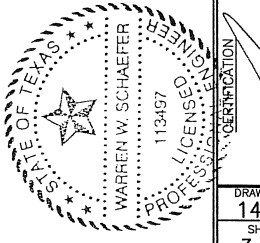

DRAWN BY: W.R.M.	CHECKED BY: W.W.S.
PLOT: 1=2	DATE: 01/29/13

NO.	REVISION DESCRIPTION	BY	DATE

JOB INFORMATION:

KAWNEER COMPANY, INC.
555 GUTHRIDGE COURT
NORCROSS, GA 30092
770-449-5555

DRAWING TITLE

IR501 ALUMINUM STORE FRONT SYSTEM – SMALL MISSILE IMPACT

CONSULTANTS

W. W. SCHAEFER ENGINEERING & CONSULTING, P.A. (REG. NO. F-14980)
7480 150TH COURT NORTH
PALM BEACH GARDENS, FL 33418
PHONE: 561-744-3424

CERTIFICATION

MAR 04 2013

WARREN W. SCHAEFER, P.E.
P.E. NO. 113497

DRAWING NO. 1484T

REV.

SHEET NO. 3 OF 3