GENERAL NOTES:

1. THESE STORE FRONT SYSTEMS HAVE BEEN TESTED, ANALYZED & APPROVED FOR DESIGN PRESSURES NOT TO EXCEED THOSE SHOWN IN THE "ALLOWABLE DESIGN PRESSURE TABLE(S).
2. OPENINGS, BUCKING & BUCKING FASTENERS MUST BE PROPERLY DESIGNED & INSTALLED TO TRANSFER WIND LOADS TO THE STRUCTURE.
3. ALL HARDWARE & FASTENERS SHALL BE IN ACCORDANCE WITH THESE DRAWINGS & SHALL NOT VARY UNLESS SPECIFICALLY MENTIONED ON THE DRAWINGS. SPECIFIED ANCHOR EMBED TO BASE MATERIAL SHALL BE BEYOND WALL FINISH OR STUCCO.
4. THE DETAILS & SPECIFICATIONS SHOWN HEREIN REPRESENT THE PRODUCTS TESTED & PROPOSED FOR WATER, AIR, IMPACT, CYCLIC & UNIFORM STATIC AIR PRESSURE TESTING IN CONFORMANCE WITH ASTM E330, E283, E331, E1886 & E1996 FOR LARGE MISSILE IMPACT STORE FRONT SYSTEMS.
5. THESE STORE FRONT SYSTEMS HAVE BEEN DESIGNED IN ACCORDANCE WITH AND MEET THE REQUIREMENTS OF THE INTERNATIONAL BUILDING CODE (IBC).
6. IMPACT SHUTTERS ARE NOT REQUIRED WITH THIS STORE FRONT SYSTEM.
7. ALL ANCHORS SECURING STORE FRONT FRAME TO PRESSURE TREATED BUCKS OR WOOD FRAMING SHALL BE CAPABLE OF RESISTING CORROSION CAUSED BY THE PRESSURE TREATING CHEMICALS IN THE WOOD.
8. DETERMINE THE POSITIVE & NEGATIVE DESIGN LOADS TO USE WHEN REFERENCING THESE DOCUMENTS IN ACCORDANCE WITH THE GOVERNING CODE AND GOVERNING WIND VELOCITY. FOR WIND LOAD CALCULATIONS IN ACCORDANCE WITH THE INTERNATIONAL BUILDING CODE, A DIRECTIONALITY FACTOR OF KD = 0.85 MAY BE APPLIED PER THE ASCE-7 STANDARD.
9. NO INCREASE IN ALLOWABLE STRESS HAS BEEN USED IN THE CERTIFICATION OF THIS PRODUCT. WIND LOAD DURATION FACTOR CD = 1.6 WAS USED FOR WOOD SCREW ANALYSIS ONLY.
10. MATERIALS, INCLUDING BUT NOT LIMITED TO STEEL SCREWS, THAT COME INTO CONTACT WITH OTHER DISSIMILAR MATERIALS SHALL BE SEPARATED OR COATED AS REQUIRED TO AVOID CORROSION OF EITHER MATERIAL.
11. TO THE BEST OF OUR KNOWLEDGE, THE STORE FRONT SYSTEMS SHOWN HEREIN ARE QUALITY ASSURED BY AN APPROVED CERTIFICATION/QA ENTITY & SHALL BE LABELED IN ACCORDANCE WITH APPLICABLE STANDARDS. THESE DRAWINGS SHOW ALL APPLICABLE ELEVATION, COMBINATION, INSTALLATION & COMPARATIVE ANALYSIS CONDITIONS AS DETERMINED THROUGH TESTING & ENGINEERING RATIONAL ANALYSIS. STORE FRONT ASSEMBLY SHALL BE IN ACCORDANCE WITH THESE DRAWINGS, THE MANUFACTURER'S QUALITY ASSURANCE SPECIFICATIONS & TESTING REPORTS.
12. CERTIFICATION OF THESE STORE FRONT SYSTEMS SHALL BE CONSIDERED VOID IF THEY ARE INSTALLED WITHOUT A BUILDING PERMIT FROM THE APPLICABLE LOCAL BUILDING DEPARTMENT OR IF THEY ARE INSTALLED BY ANYONE OTHER THAN A LICENSED CONTRACTOR EXPERIENCED WITH STORE FRONT INSTALLATIONS.

CORNER & FRAME END CONSTRUCTION:

FRAME HEAD CORNER (APPLICABLE TO ITEM #1A & 1B): HEAD IS SQUARE CUT, BUTTED TO SIDE, FASTENED WITH THREE(3) NO. 12 X 1" PHTFS FASTENERS THROUGH THE SIDE MEMBER INTO THE HEAD MEMBER SCREW SPLINES & SEALED WITH SILICONE.

FRAME HEAD CORNER (APPLICABLE TO ITEM #1C): HEAD IS MITER OR SQUARE CUT, BUTTED TO SIDE, FASTENED WITH TWO(2) NO. 12 X 1 1/2" PHTFS FASTENERS THROUGH THE SIDE MEMBER INTO THE HEAD MEMBER SCREW SPLINES & SEALED WITH SILICONE.

FRAME SILL CORNER: SILL IS SQUARE CUT, BUTTED TO SIDE, FASTENED WITH THREE(3) NO. 12 X 1" PHTFS FASTENERS THROUGH THE SIDE MEMBER INTO THE SILL MEMBER SCREW SPLINES & SEALED WITH SILICONE.

FRAME DOOR JAMB SILL CORNER: SILL IS SQUARE CUT, BUTTED TO SIDE, FASTENED WITH 1 JAMB PIVOT ASSEMBLY. EACH PIVOT ASSEMBLY WAS FASTENED TO TO THE SIDE WITH THREE(3) NO. 12-24 X 5/8" FHMS. THE THRESHOLD IS THEN FASTENED TO PIVOT ASSEMBLY WITH TWO(2) NO. 12-24 X 3/8" FHMS & SEALED WITH SILICONE.

HORIZONTAL FRAME MULLION END (APPLICABLE TO ITEMS #6A & #7): HORIZONTAL IS SQUARE CUT, BUTTED TO SIDE, FASTENED WITH THREE(3) NO. 12 X 1" SS PHTFS FASTENERS THROUGH THE SIDE MEMBER INTO THE MULLION MEMBER SCREW SPLINES & SEALED WITH SILICONE.

HORIZONTAL FRAME MULLION END (APPLICABLE TO ITEM #6B): HORIZONTAL IS SQUARE CUT, BUTTED TO SIDE, JOINED VIA A SHEAR BLOCK (PART #21). THE SHEAR BLOCK IS FASTENED TO THE VERTICAL FRAME MEMBER WITH FOUR(4) NO. 12 X 1 7/8" FHTF TYPE B SCREWS. THE HORIZONTAL MEMBER IS FASTENED TO THE SHEAR BLOCK WITH THREE(3) NO. 12 X 1" FHTF TYPE AB SCREWS. EACH CORNER IS SEALED WITH DOW 795 SILICONE SEALANT.

FRAME ANCHOR REQUIREMENTS TABLE

FRAME & STRAP ANCHOR SCREWS

OPENING TYPE	OPENING TYPE (SUBSTRATE)	FRAME TO OPENING FASTENER TYPE	MINIMUM EMBED	MINIMUM EDGE DIST.
A	MIN. 2X6 WOOD FRAME OR BUCK (MIN. GR. 3 & G=0.55)	(4) NO. 14 SMS OR WOOD SCREW	1 1/4"	3/4"
B	MIN. 1/8" THK A36 STEEL	1/4" GR. 5 SELF TAP/DRILL SCREW	FULL	1/2"
C	MIN. 3000 PSI CONCRETE	(1) 1/4" CONCRETE SCREW	1 1/2"	2 1/2"
D	MIN. 16 GA. 33 KSI METAL STUD	1/4" GR. 5 SELF TAP/DRILL SCREW	FULL	1/2"
E	MIN. C-90 CMU	(1) 1/4" CONCRETE SCREW	1 1/4"	2 1/2"
(3) F	MIN. 3000 PSI CONCRETE	(2) 3/8" WEDGE/SLEEVE ANCHOR	2 1/2"	3"

(1) CONCRETE SCREWS SHALL BE ELCO ULTRACONS (C.S.), ELCO CRETE-FLEX (S.S.), ITW RAMSET/RED HEAD TAPCONS (C.S. OR S.S.) OR HILTI KWIK-CON II (C.S OR S.S.).
(2) WEDGE/SLEEVE ANCHORS SHALL BE RAMSET/RED HEAD DYNABOLT, HILTI KWIK-BOLT 3, OR POWERS RAWL POWER BOLT (STEEL OR S.S.)
(3) ANCHOR TYPE "F" IS ONLY APPLICABLE FOR USE WITH THE SILL ANCHOR BLOCK AT THE VERTICAL DOOR MULLION BOTTOM END.
(4) WHILE 1/4" MAX. SHIM GAP IS SPECIFIED IN THE SECTIONS, A 3/8" SHIM GAP MAY BE USED WITH ALL SUBSTRATES PROVIDING THE SCREWS ARE AS SPECIFIED IN THIS TABLE EXCEPT THAT THE SCREWS TO WOOD SUBSTRATE MUST BE 1/4"-14 GRADE 5 SCREWS.

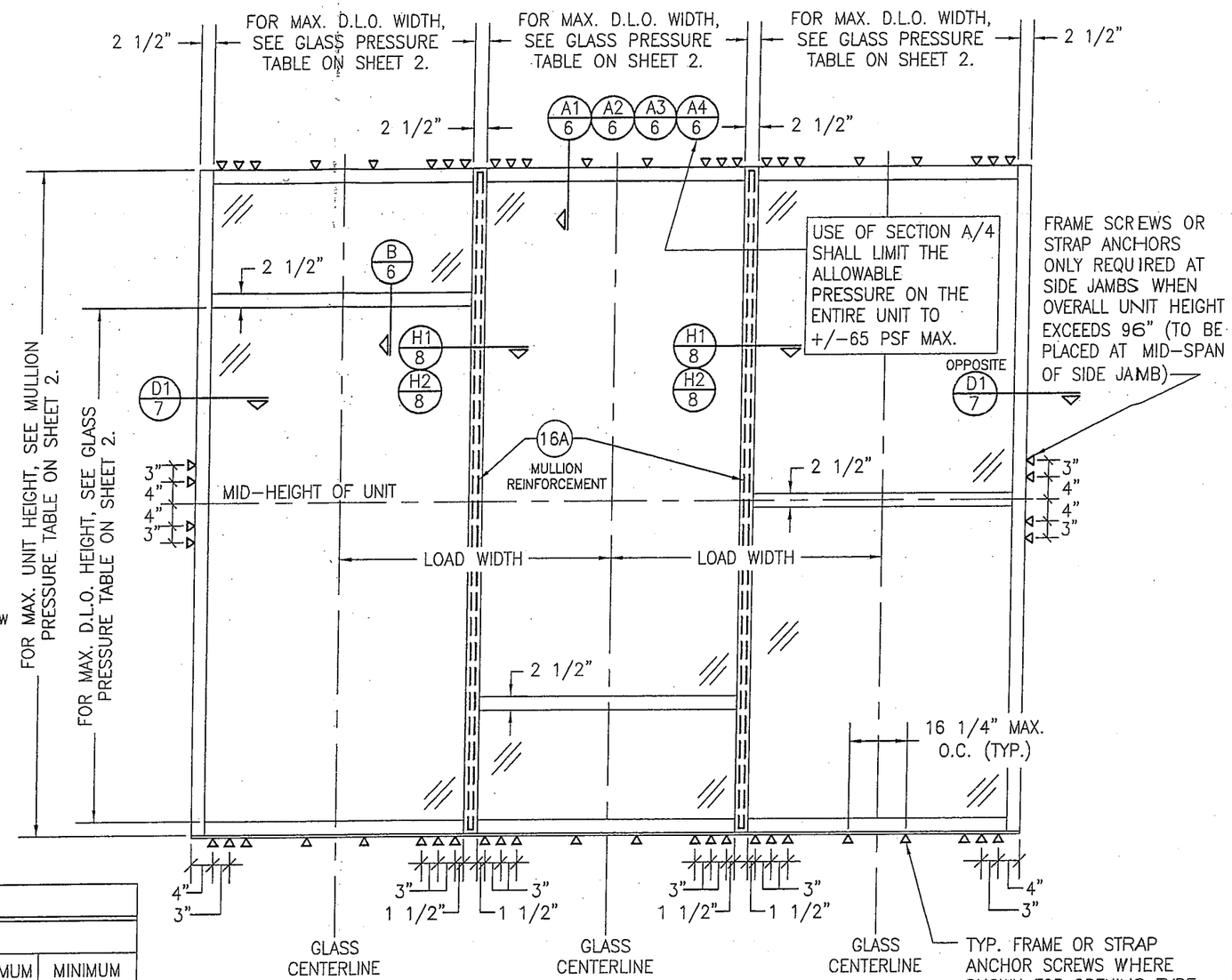

EXTERIOR ELEVATION
MULTIPLE FIXED PANEL STORE FRONT ASSEMBLY
(WHEN ANCHORED TO WOOD, METAL STUD, CONCRETE OR CMU)

SCALE: 1/2"=1'-0"

HORIZONTAL STACKING & OVERALL UNIT WIDTH IS UNLIMITED PROVIDING DIMENSIONS SPECIFIED ARE NOT EXCEEDED. NUMBER OF VERTICAL PANELS IS UNLIMITED BUT MUST FIT INSIDE MAXIMUM UNIT HEIGHT SHOWN.

NOTE: CMU IS APPLICABLE ONLY AT SIDES.

STATE OF TEXAS — WARREN W. SCHAEFER — 113497 — LICENSED PROFESSIONAL ENGINEER

MAR 20 2013

WARREN W. SCHAEFER, P.E.
P.E. NO. 113497

THESE DRAWINGS ARE APPLICABLE ONLY TO THE PRODUCT SPECIFIED. THEY MAY NOT BE USED FOR THE ASSEMBLY AND/OR INSTALLATION OF ANY OTHER PRODUCT NOR MAY THEY BE USED FOR RATIONAL AND/OR LOCAL APPROVAL OF ANY PRODUCT NOT PRODUCED BY THE MANUFACTURER STATED ON THESE DRAWINGS.

DRAWN BY: W.R.M.	CHECKED BY: W.W.S.
PLOT: 1=24	DATE: 03/19/13

NO.	REVISION DESCRIPTION	BY	DATE

DRAWING TITLE
IR500 ALUMINUM STORE FRONT SYSTEM – LARGE MISSILE IMPACT

JOB INFORMATION:
KAWNEER COMPANY, INC.
555 GUTHRIDGE COURT
NORCROSS, GA 30092
770-449-5555

CONSULTANTS
W. W. SCHAEFER ENGINEERING & CONSULTING, P.A. (REG. NO. F-14980)
7480 150TH COURT NORTH
PALM BEACH GARDENS, FL 33418
PHONE: 561-744-3424

DRAWING NO. 1633T
REV.
SHEET NO. 1 OF 10

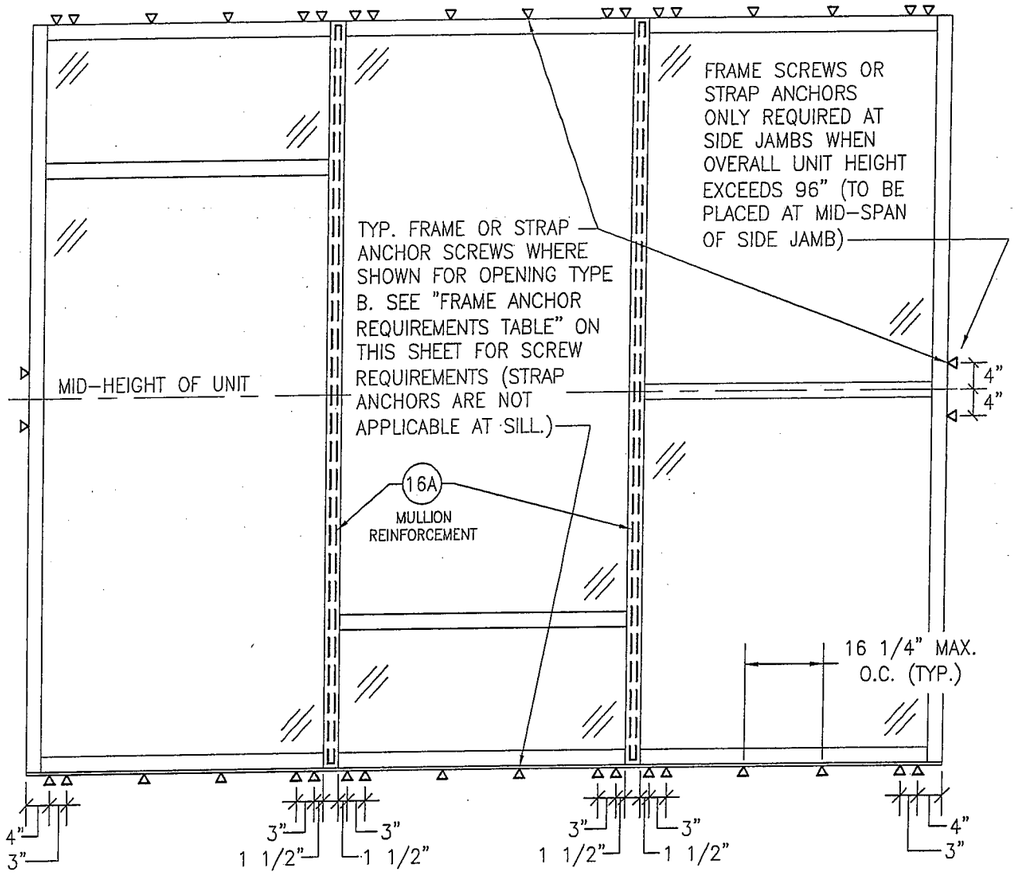

EXTERIOR ELEVATION
MULTIPLE FIXED PANEL STORE FRONT ASSEMBLY
(WHEN ANCHORED TO STEEL)
SCALE: 1/2"=1'-0"

* FOR ALL FRAMING & D.L.O. DIMENSIONS AND OTHER INFORMATION NOT SHOWN, SEE ELEVATION ON SHEET 1.
* IF SILL IS CONCRETE, SEE ELEVATION ON SHEET 1 FOR SILL ANCHORAGE REQUIREMENTS.

MULLION ALLOWABLE DESIGN PRESSURE

MAXIMUM UNIT HEIGHT (IN.)	MAXIMUM LOAD WIDTH (IN.)	ALLOWABLE PRESSURE (+/- PSF) NON REINFORCED	ALLOWABLE PRESSURE (+/- PSF) REINFORCED
120	60	N/A	54.7
	54	N/A	60.8
	50 1/2	N/A	65.0
	48	N/A	68.4
	42	N/A	78.2
	36	N/A	90.0
108	60	N/A	63.2
	54	N/A	70.2
	50 1/2	N/A	75.1
	48	N/A	79.0
	42	N/A	90.0
102	60	N/A	75.0
	54	N/A	83.4
	50 1/2	N/A	89.1
	48	N/A	90.0
96	60	90.0	90.0

NOTES:
1. SEE ELEVATIONS FOR DIMENSIONING OF LOAD WIDTH.
2. ALLOWABLE UNIT PRESSURE SHALL BE THE LESSER OF THE PRESSURE SHOWN IN THIS TABLE & THAT SPECIFIED FOR THE GLASS.
3. "N/A" DESIGNATES A SIZE NOT APPLICABLE TO THAT REINFORCEMENT CONDITION.
4. SEE SECTION H2/8 FOR DETAIL OF NON-REINFORCED MULLION & SECTION H1/8 FOR REINFORCED MULLION.

GLASS ALLOWABLE PRESSURE TABLE

MAXIMUM D.L.O. HEIGHT (IN.)	MAXIMUM D.L.O. WIDTH (IN.)	ALLOWABLE PRESSURE (+/- PSF) GLASS OPTION 1, 2 & 5	ALLOWABLE PRESSURE (+/- PSF) GLASS OPTION 3 & 4
91	57 1/2	N/A	90
92 3/4	48	65	90
97	54	N/A	90
97	45 3/4	65	90
103	50 3/4	N/A	90
103	43 1/4	65	90
109	48	N/A	90
109	40 3/4	65	90
115	45 1/2	N/A	90
115	38 3/4	65	90

NOTES:
1. SEE ELEVATIONS FOR DIMENSIONING OF D.L.O. HEIGHT & WIDTH.
2. ALLOWABLE UNIT PRESSURE SHALL BE THE LESSER OF THE PRESSURE SHOWN IN THIS TABLE & THAT SPECIFIED FOR THE VERTICAL MULLIONS.
3. "N/A" DESIGNATES A SIZE NOT APPLICABLE TO THAT REINFORCEMENT CONDITION.

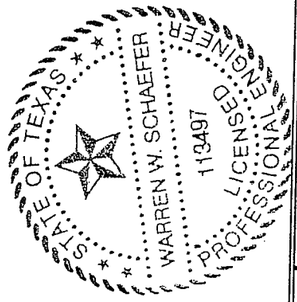

DRAWN BY: W.R.M.	CHECKED BY: W.W.S.
PLOT: 1=24	DATE: 03/19/13

NO.	REVISION DESCRIPTION	BY	DATE

DRAWING TITLE
IR500 ALUMINUM STORE FRONT SYSTEM - LARGE MISSILE IMPACT

JOB INFORMATION:
KAWNEER COMPANY, INC.
555 GUTHRIDGE COURT
NORCROSS, GA 30092
770-449-5555

CONSULTANTS
W. W. SCHAEFER ENGINEERING & CONSULTING, P.A. (REG. NO. F-14980)
7480 150TH COURT NORTH
PALM BEACH GARDENS, FL 33418
PHONE: 561-744-3424

CERTIFICATION
MAR 20 2013
WARREN W. SCHAEFER, P.E.
P.E. NO. 113497

DRAWING NO. 1633T
REV.
SHEET NO. 2 OF 10

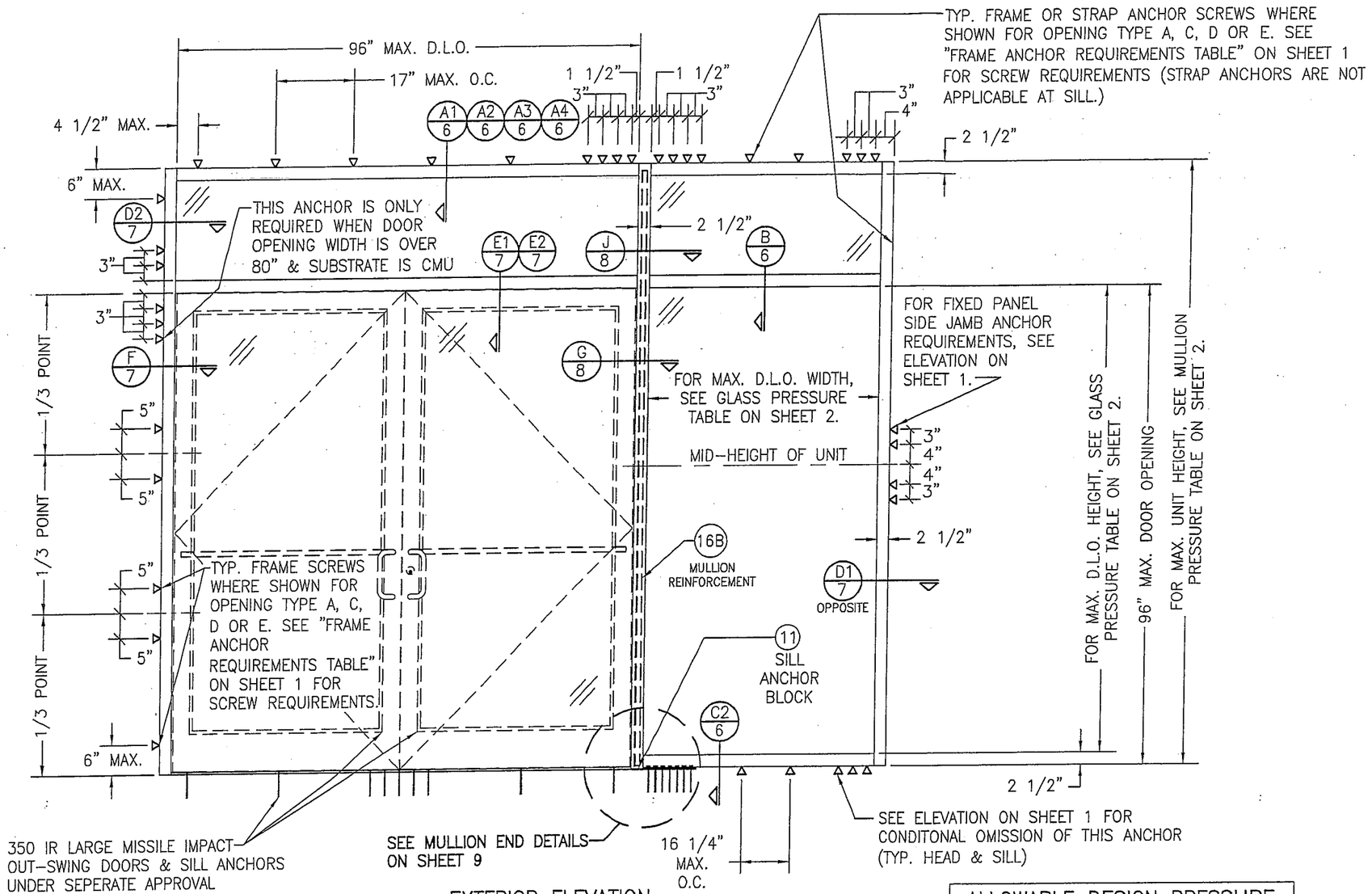

EXTERIOR ELEVATION
STORE FRONT ASSEMBLY WITH DOORS & TRANSOM
(WHEN ANCHORED TO WOOD, METAL STUD, COINCRETE OR CMU)

SCALE: 1/2"=1'-0"

* SINGLE SIDELIGHT SHOWN, MULTIPLE SIDELIGHT CONDITION ALSO APPLIES WITH SIDELIGHT AT ONE OR BOTH SIDES.
* DOUBLE DOOR CONDITION SHOWN, SINGLE DOOR CONDITION ALSO APPLIES.
* HORIZONTAL STACKING & OVERALL UNIT WIDTH IS UNLIMITED. NUMBER OF VERTICAL PANELS IS UNLIMITED BUT MUST FIT INSIDE MAXIMUM FRAME HEIGHT SHOWN.

ALLOWABLE DESIGN PRESSURE (DOOR UNITS)
+/-65 PSF
ONLY THE DOOR/TRANSOM AREA & THE PANEL SECTIONS DIRECTLY NEXT TO THE DOOR AREA ARE RESTRICTED TO +/-65 PSF. FOR ALLOWABLE PRESSURE ON GLASS PANEL AREAS OF THE STOREFRONT ASSEMBLY AWAY FROM THE DOORS, SEE GLASS AND MULLION PRESSURE TABLES ON SHEET 2.

STATE OF TEXAS
WARREN W. SCHAEFER
113497
LICENSED PROFESSIONAL ENGINEER

DRAWN BY: W.R.M.	CHECKED BY: W.W.S.
PLOT: 1=24	DATE: 03/19/13

NO.	REVISION DESCRIPTION	BY	DATE

DRAWING TITLE
IR500 ALUMINUM STORE FRONT SYSTEM – LARGE MISSILE IMPACT

JOB INFORMATION:
KAWNEER COMPANY, INC.
555 GUTHRIDGE COURT
NORCROSS, GA 30092
770-449-5555

CONSULTANTS
W. W. SCHAEFER ENGINEERING & CONSULTING, P.A. (REG. NO. F-14980)
7480 150TH COURT NORTH
PALM BEACH GARDENS, FL 33418
PHONE: 561-744-3424

CERTIFICATION
MAR 20 2013
WARREN W. SCHAEFER P.E. NO. 113497 P.E.

DRAWING NO. 1633T
REV.
SHEET NO. 3 OF 10

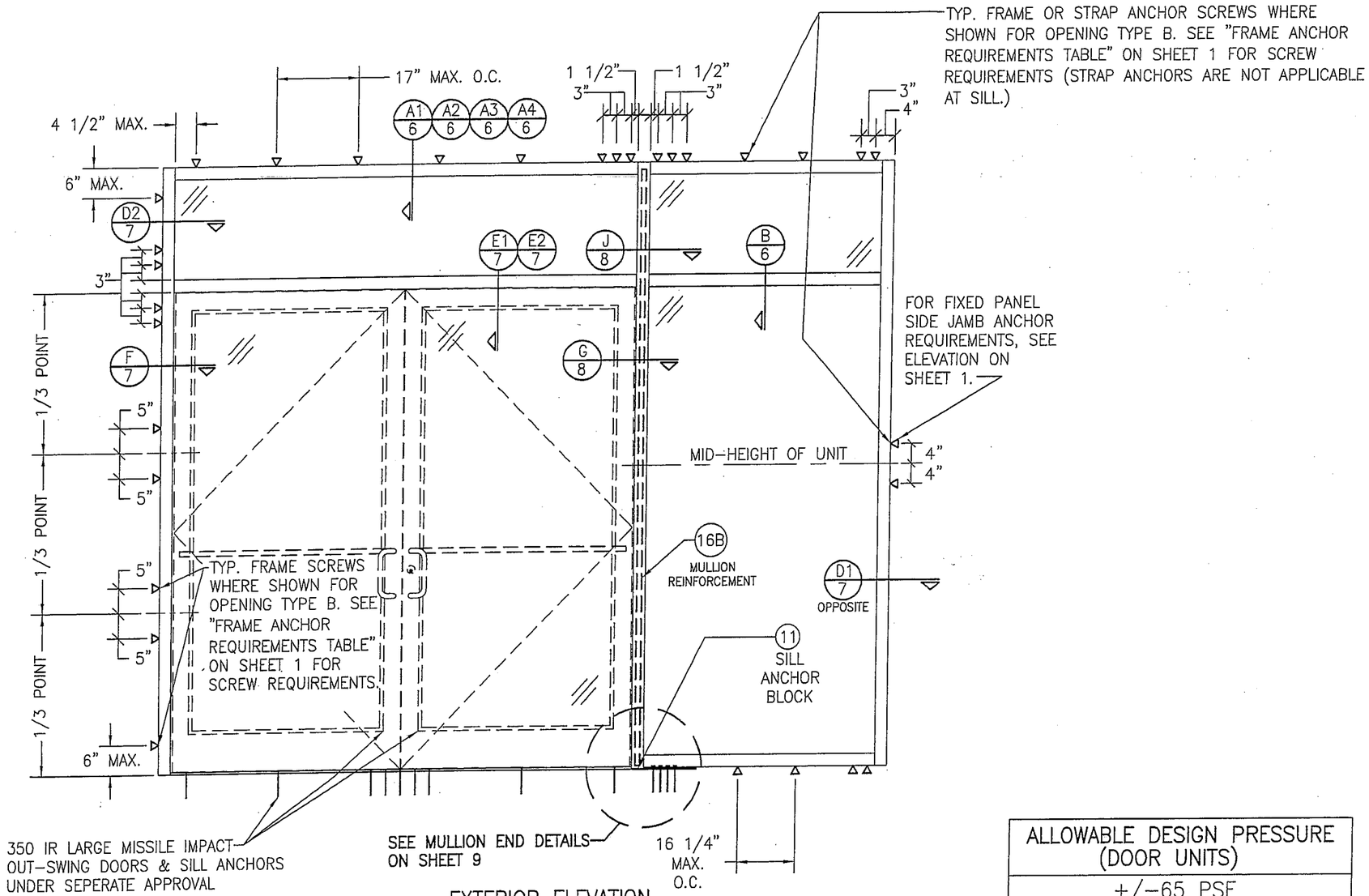

EXTERIOR ELEVATION
STORE FRONT ASSEMBLY WITH DOORS & TRANSOM (WHEN ANCHORED TO STEEL)

SCALE: 1/2"=1'-0"

* SINGLE SIDELIGHT SHOWN, MULTIPLE SIDELIGHT CONDITION ALSO APPLIES WITH SIDELIGHT AT ONE OR BOTH SIDES.
* DOUBLE DOOR CONDITION SHOWN, SINGLE DOOR CONDITION ALSO APPLIES.
* HORIZONTAL STACKING & OVERALL UNIT WIDTH IS UNLIMITED. NUMBER OF VERTICAL PANELS IS UNLIMITED BUT MUST FIT INSIDE MAXIMUM FRAME HEIGHT SHOWN.
* FOR ALL FRAMING & D.L.O. DIMENSIONS, SEE ELEVATION ON SHEET 3.

ALLOWABLE DESIGN PRESSURE (DOOR UNITS)
+/-65 PSF
ONLY THE DOOR/TRANSOM AREA & THE PANEL SECTIONS DIRECTLY NEXT TO THE DOOR AREA ARE RESTRICTED TO +/-65 PSF. FOR ALLOWABLE PRESSURE ON GLASS PANEL AREAS OF THE STOREFRONT ASSEMBLY AWAY FROM THE DOORS, SEE GLASS AND MULLION PRESSURE TABLES ON SHEET 2.

DRAWN BY: W.R.M.	CHECKED BY: W.W.S.
PLOT: 1=24	DATE: 03/19/13

NO.	REVISION DESCRIPTION	BY	DATE

DRAWING TITLE
IR500 ALUMINUM STORE FRONT SYSTEM – LARGE MISSILE IMPACT

JOB INFORMATION:
KAWNEER COMPANY, INC.
555 GUTHRIDGE COURT
NORCROSS, GA 30092
770-449-5555

CONSULTANTS
W. W. SCHAEFER ENGINEERING & CONSULTING, P.A. (REG. NO. F-14980)
7480 150TH COURT NORTH
PALM BEACH GARDENS, FL 33418
PHONE: 561-744-3424

CERTIFICATION
MAR 20 2013
WARREN W. SCHAEFER, P.E.
P.E. NO. 113497

DRAWING NO. 1633T
REV.

SHEET NO. 4 OF 10

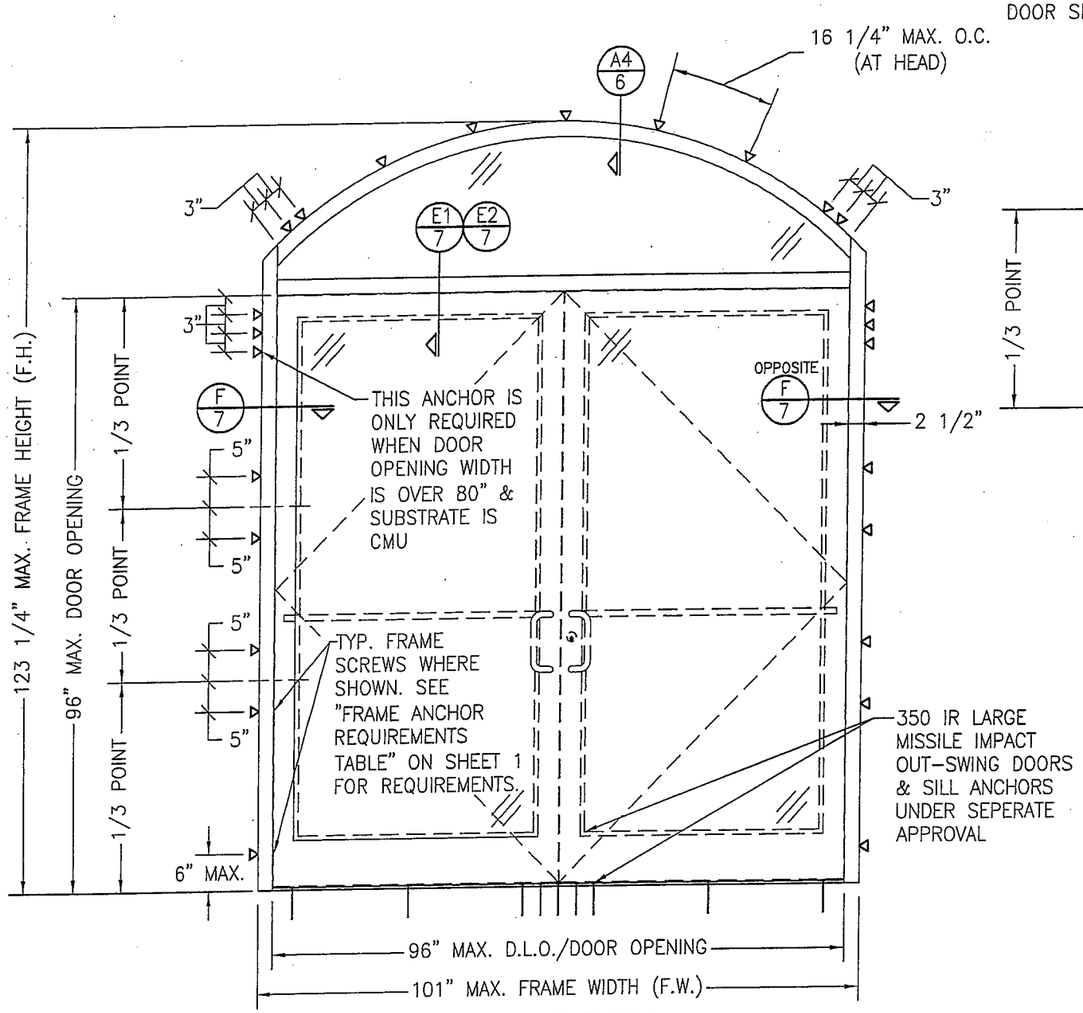

EXTERIOR ELEVATION
STORE FRONT FRAMING WITH DOORS & EYEBROW TRANSOM
(APPLICABLE WITH ALL SUBSTRATES)
(DOUBLE DOOR CONDITION SHOWN, SINGLE DOOR CONDITION ALSO APPLIES)
SCALE: 1/2"=1'-0"

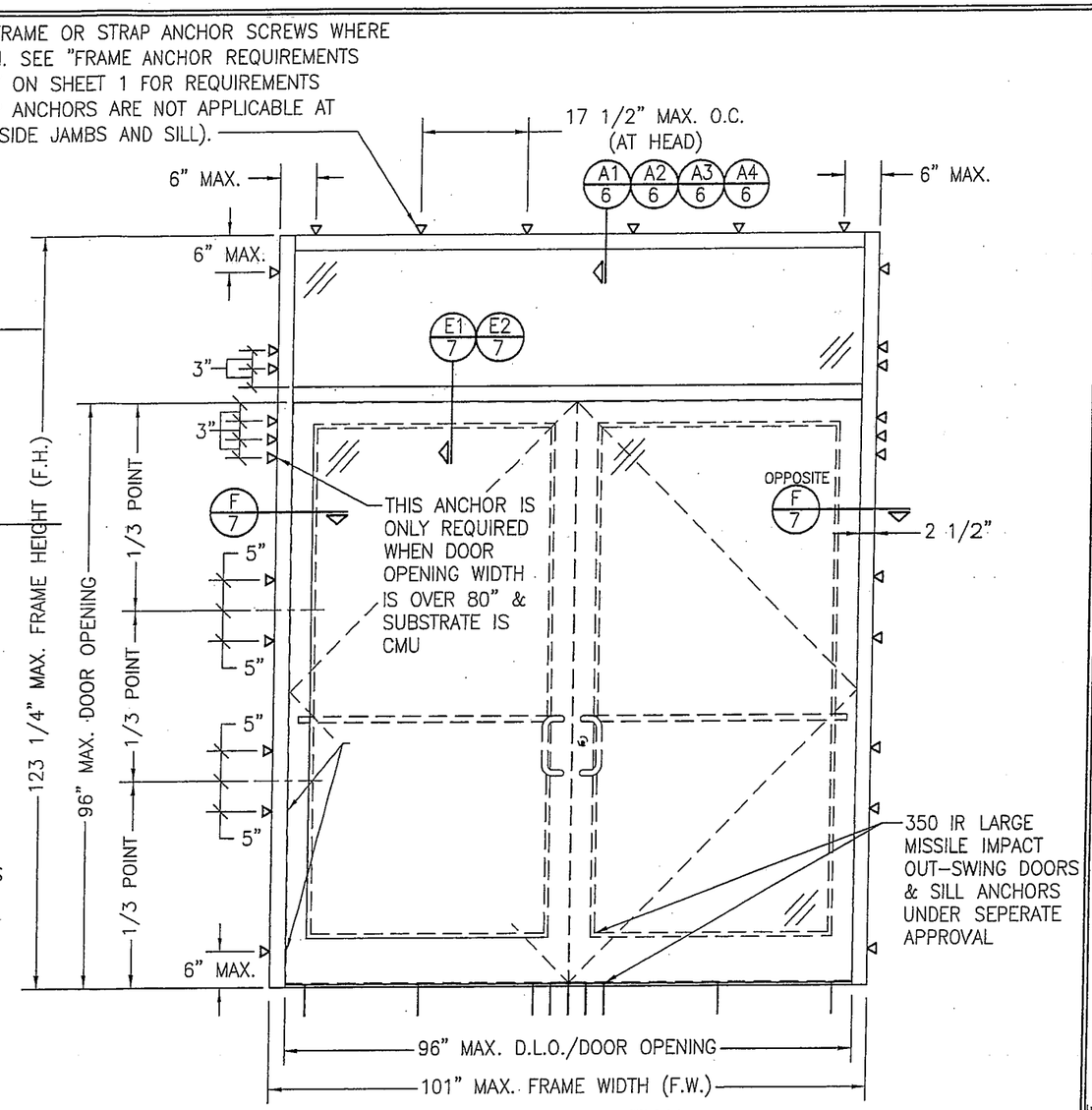

EXTERIOR ELEVATION
STORE FRONT FRAMING WITH DOORS & RECTANGULAR TRANSOM
(APPLICABLE WITH ALL SUBSTRATES)
(DOUBLE DOOR CONDITION SHOWN, SINGLE DOOR CONDITION ALSO APPLIES)
SCALE: 1/2"=1'-0"

ALLOWABLE DESIGN PRESSURE (DOOR WITH TRANSOM UNITS)
+/-65 PSF

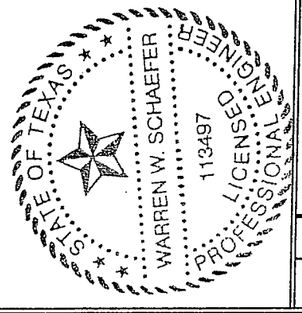

DRAWN BY: W.R.M.	CHECKED BY: W.W.S.
PLOT: 1=24	DATE: 03/19/13

NO.	REVISION DESCRIPTION	BY	DATE

DRAWING TITLE
IR500 ALUMINUM STORE FRONT SYSTEM – LARGE MISSILE IMPACT

JOB INFORMATION:
KAWNEER COMPANY, INC.
555 GUTHRIDGE COURT
NORCROSS, GA 30092
770-449-5555

CONSULTANTS
W. W. SCHAEFER ENGINEERING & CONSULTING, P.A. (REG. NO. F-14980)
7480 150TH COURT NORTH
PALM BEACH GARDENS, FL 33418
PHONE: 561-744-3424

CERTIFICATION
MAR 20 2013
WARREN W. SCHAEFER, P.E.
P.E. NO. 113497

DRAWING NO. 1633T
REV.
SHEET NO. 5 OF 10

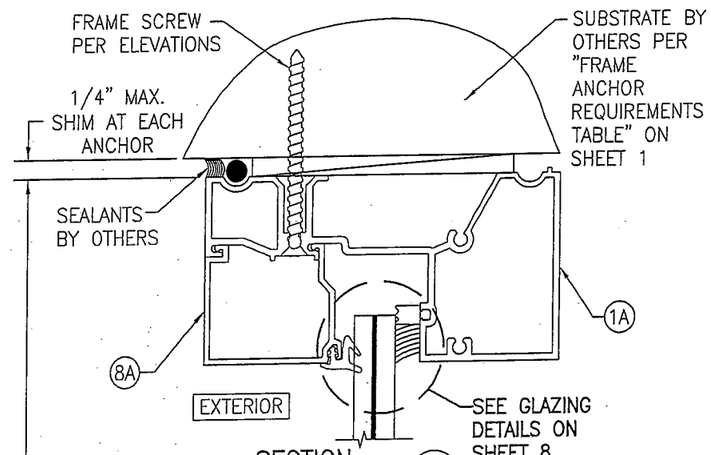

SECTION A1/6
SCALE: 1/2 FULL

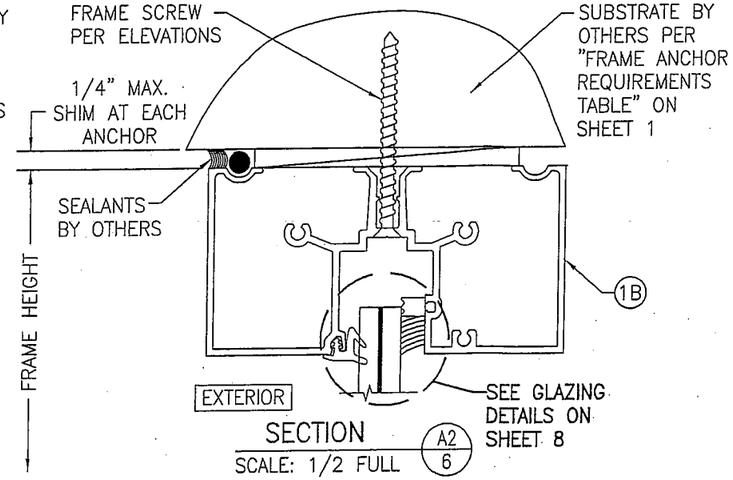

SECTION A2/6
SCALE: 1/2 FULL
(FRAME SCREW INSTALLED)

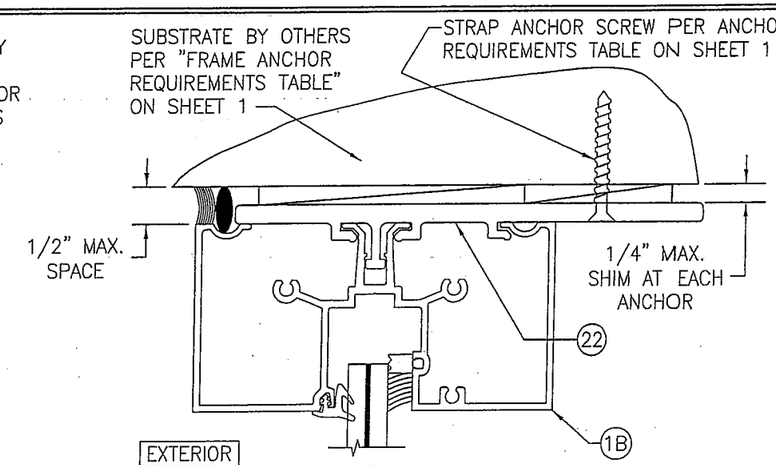

ALTERNATE SECTION A2/6
SCALE: 1/2 FULL
(STRAP ANCHOR INSTALLED)

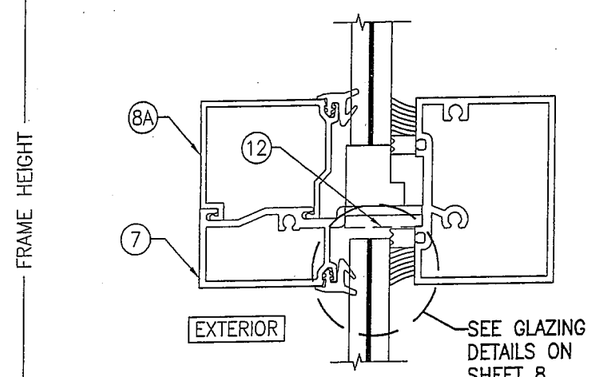

SECTION B/6
SCALE: 1/2 FULL

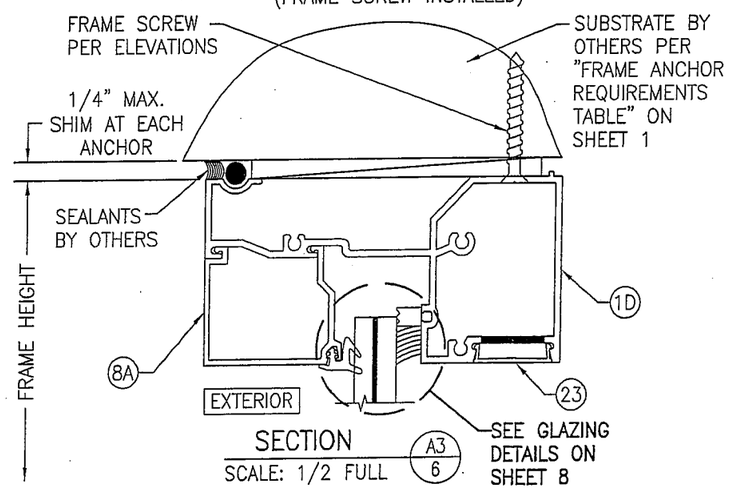

SECTION A3/6
SCALE: 1/2 FULL

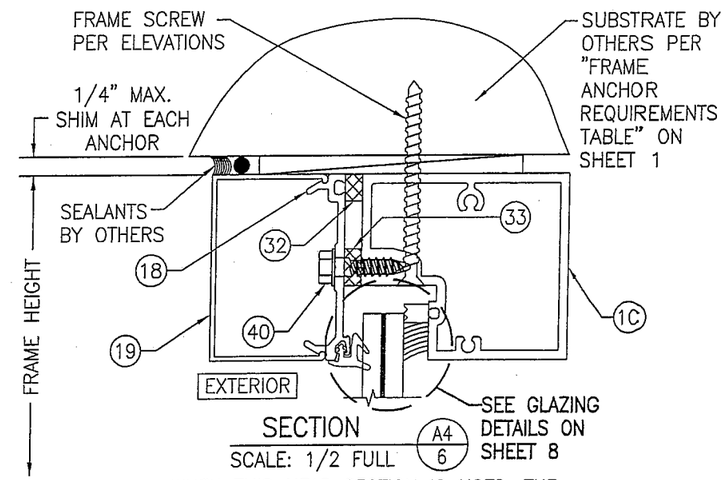

SECTION A4/6
SCALE: 1/2 FULL

WHEN THIS HEAD SECTION IS USED, THE ALLOWABLE DESIGN PRESSURE ON THE ENTIRE UNIT SHALL BE LIMITED TO MAXIMUM +/-65 PSF.

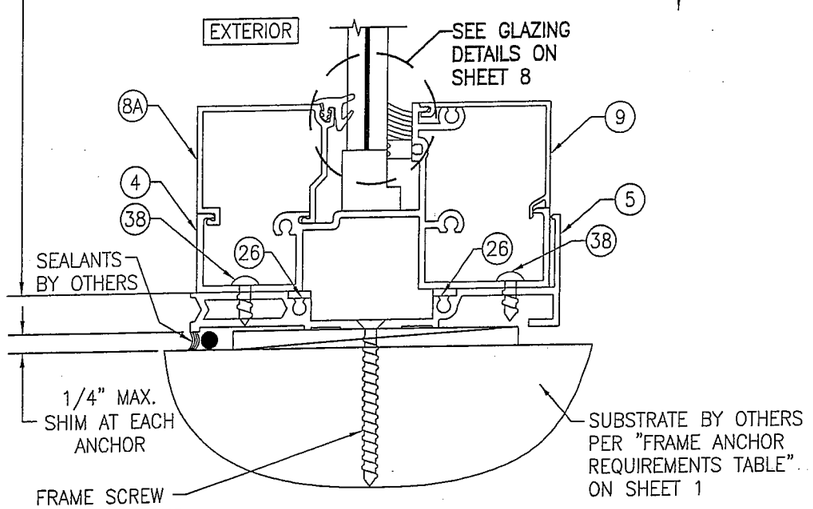

SECTION C1/6
SCALE: 1/2 FULL

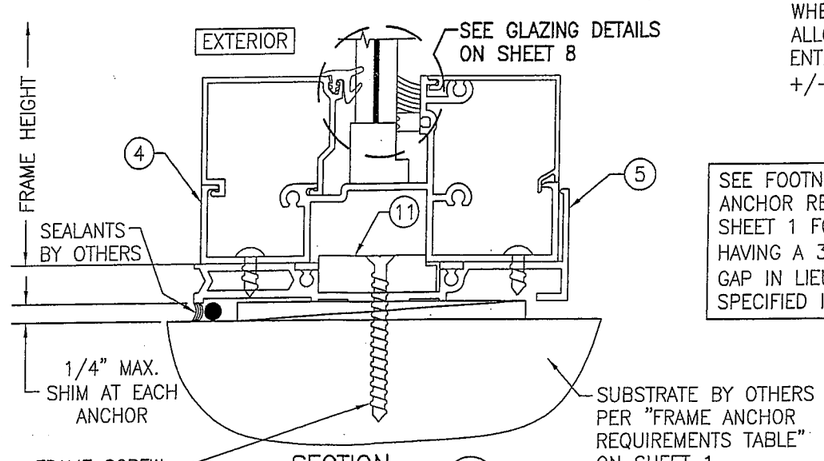

SECTION C2/6
SCALE: 1/2 FULL
(FOR DETAIL NOT SHOWN, SEE SECTION C1/6)

SEE FOOTNOTE #4 BELOW ANCHOR REQUIREMENTS TABLE ON SHEET 1 FOR THE OPTION OF HAVING A 3/8" PERIMETER SHIM GAP IN LIEU OF THE 1/4" SPECIFIED IN THESE SECTIONS.

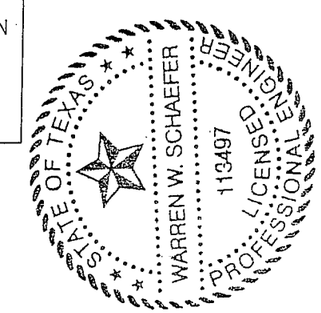

DRAWN BY: W.R.M.	CHECKED BY: W.W.S.
PLOT: 1=2	DATE: 03/19/13

NO.	REVISION DESCRIPTION	BY	DATE

DRAWING TITLE
IR500 ALUMINUM STORE FRONT SYSTEM – LARGE MISSILE IMPACT

JOB INFORMATION:

KAWNEER COMPANY, INC.
555 GUTHRIDGE COURT
NORCROSS, GA 30092
770-449-5555

CONSULTANTS
W. W. SCHAEFER ENGINEERING & CONSULTING, P.A. (REG. NO. F-14980)
7480 150TH COURT NORTH
PALM BEACH GARDENS, FL 33418
PHONE: 561-744-3424

CERTIFICATION
MAR 20 2013
WARREN W. SCHAEFER, P.E.
P.E. NO. 113497

DRAWING NO. 1633T
REV.

SHEET NO. 6 OF 10

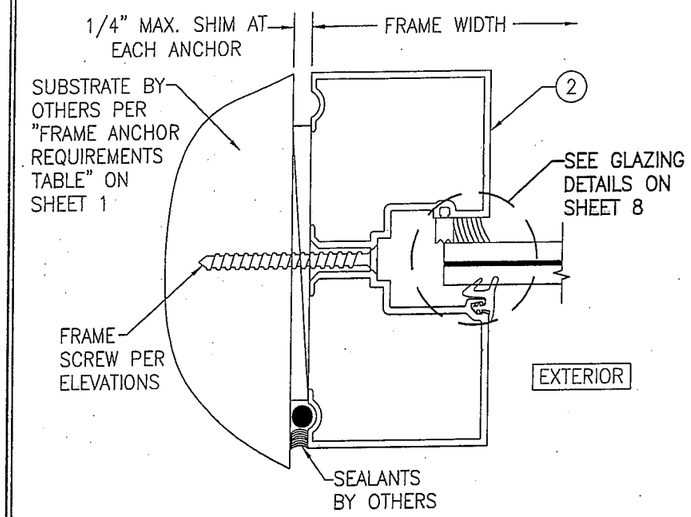

SECTION D1/7
SCALE: 1/2 FULL
(FRAME SCREW INSTALLED)

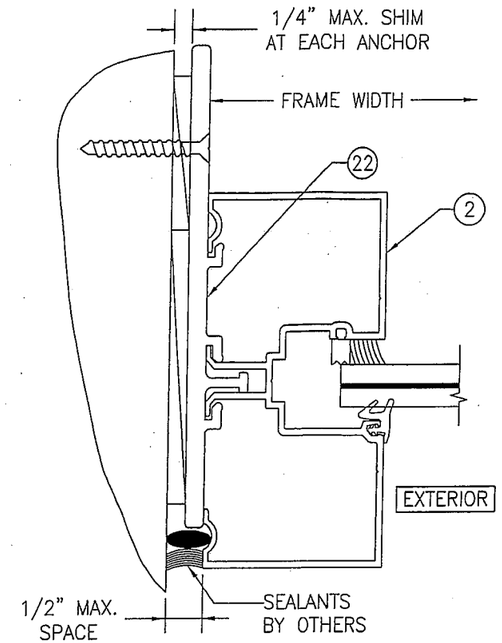

ALTERNATE SECTION D1/7
SCALE: 1/2 FULL
(STRAP ANCHOR INSTALLED)

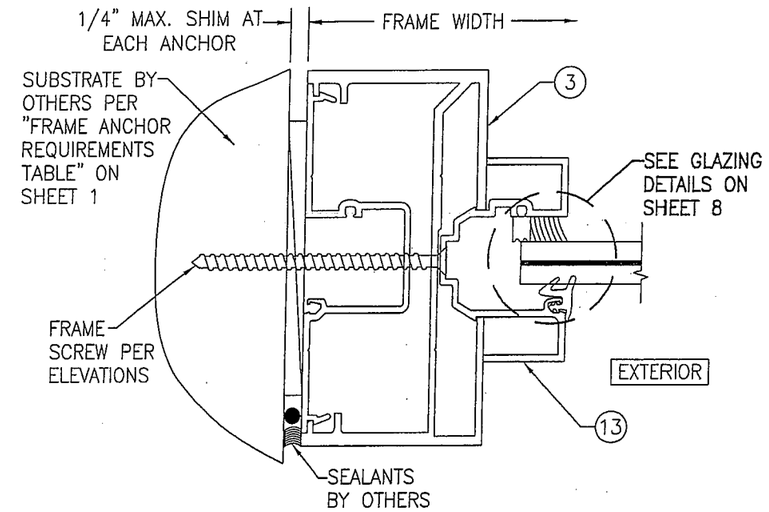

SECTION D2/7
SCALE: 1/2 FULL

SEE FOOTNOTE #4 BELOW ANCHOR REQUIREMENTS TABLE ON SHEET 1 FOR THE OPTION OF HAVING A 3/8" PERIMETER SHIM GAP IN LIEU OF THE 1/4" SPECIFIED IN THESE SECTIONS.

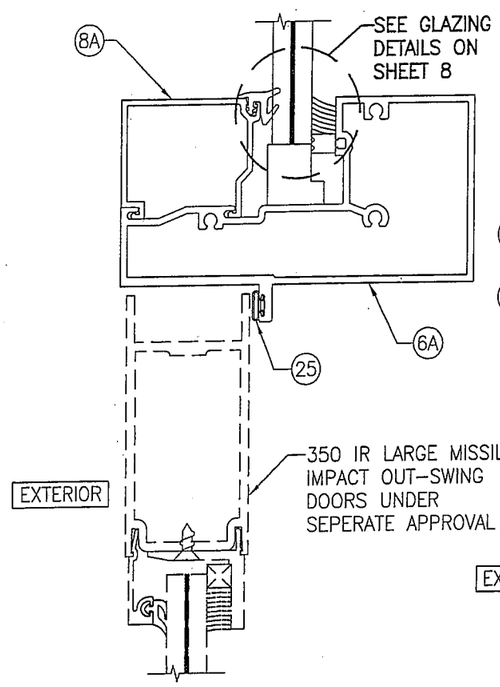

SECTION E1/7
SCALE: 1/2 FULL

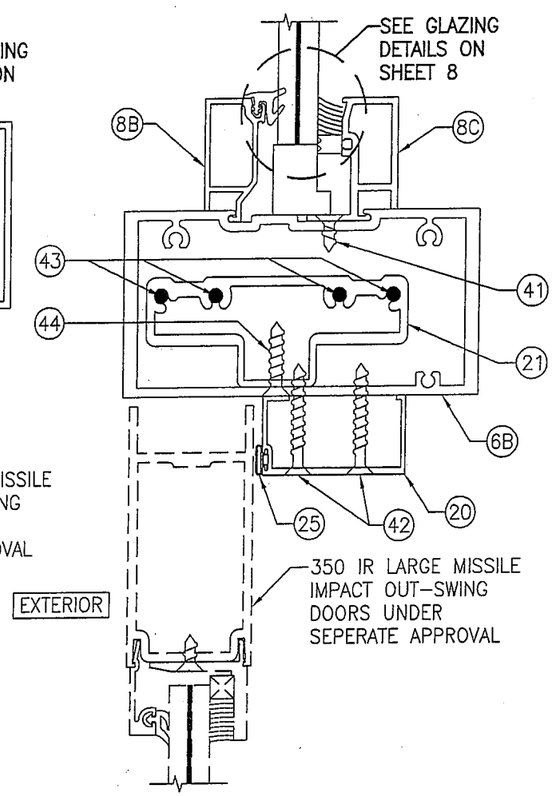

SECTION E2/7
SCALE: 1/2 FULL

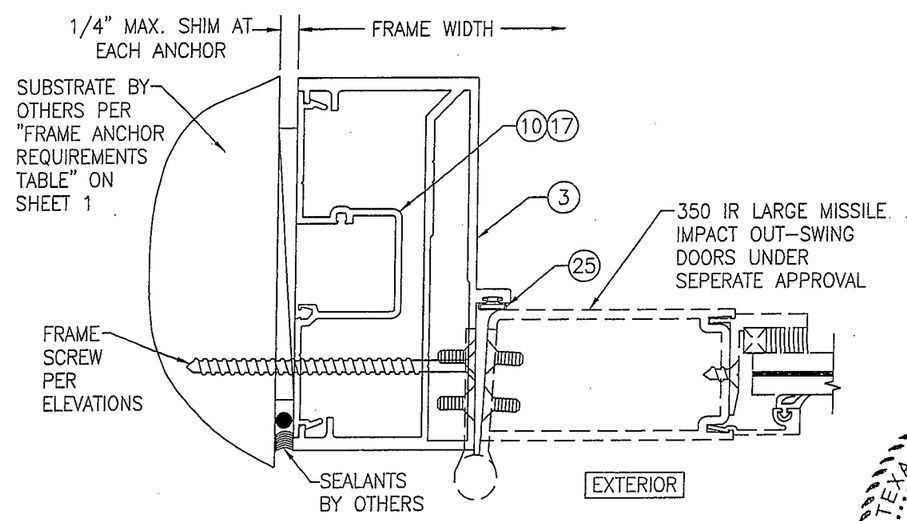

SECTION F/7
SCALE: 1/2 FULL

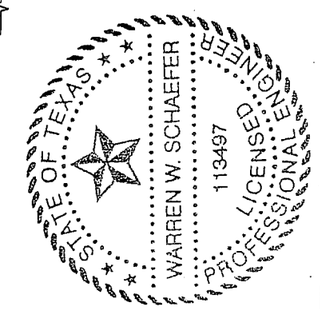

DRAWN BY: W.R.M.	CHECKED BY: W.W.S.
PLOT: 1=2	DATE: 03/19/13

NO.	REVISION DESCRIPTION	BY	DATE

DRAWING TITLE
IR500 ALUMINUM STORE FRONT SYSTEM – LARGE MISSILE IMPACT

JOB INFORMATION:

KAWNEER COMPANY, INC.
555 GUTHRIDGE COURT
NORCROSS, GA 30092
770-449-5555

CONSULTANTS
W. W. SCHAEFER ENGINEERING & CONSULTING, P.A. (REG. NO. F-14980)
7480 150TH COURT NORTH
PALM BEACH GARDENS, FL 33418
PHONE: 561-744-3424

CERTIFICATION
MAR 20 2013
WARREN W. SCHAEFER, P.E.
P.E. NO. 113497

DRAWING NO. 1633T
REV.

SHEET NO. 7 OF 10

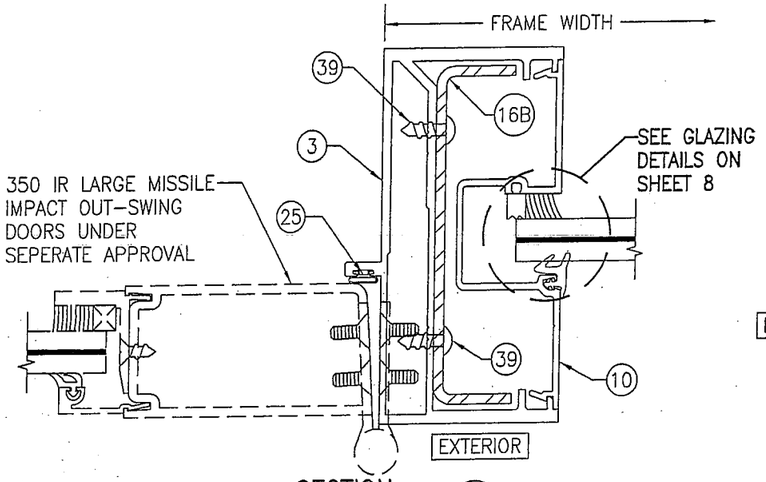

SECTION G/8
SCALE: 1/2 FULL

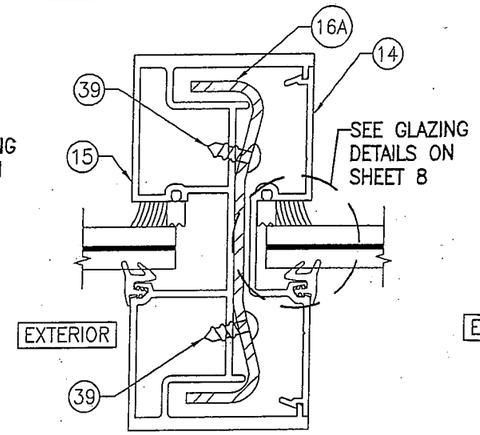

SECTION H1/8
SCALE: 1/2 FULL
(REINFORCED MULLION)

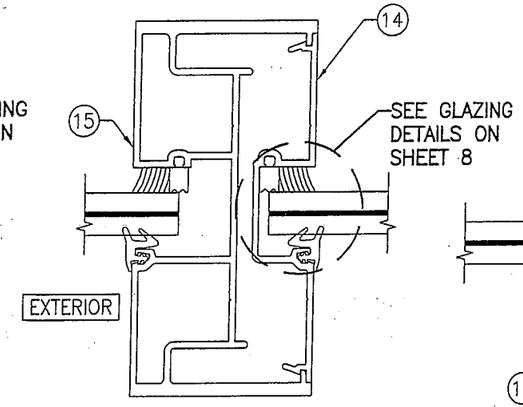

SECTION H2/8
SCALE: 1/2 FULL
(NON-REINFORCED MULLION)

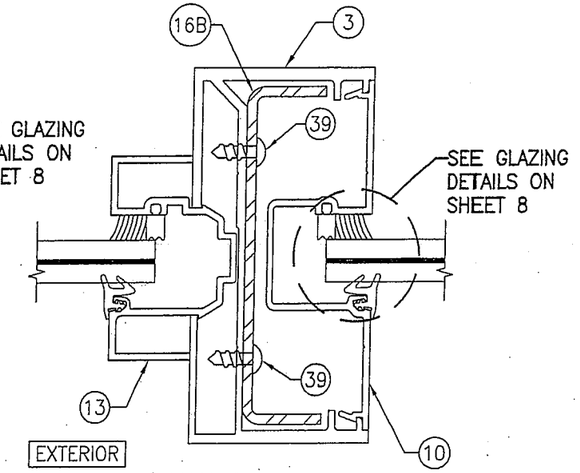

SECTION J/8
SCALE: 1/2 FULL

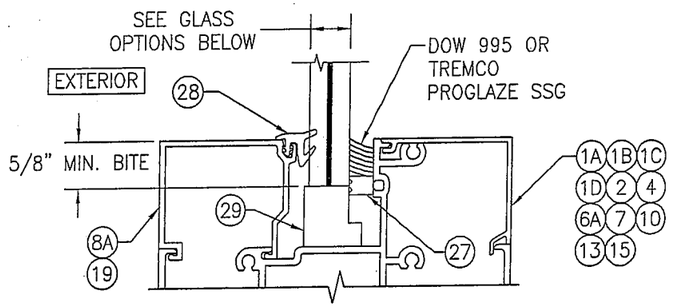

TYP. GLAZING DETAIL
(WET GLAZED; SINGLE GLAZING BEAD CONDITION)

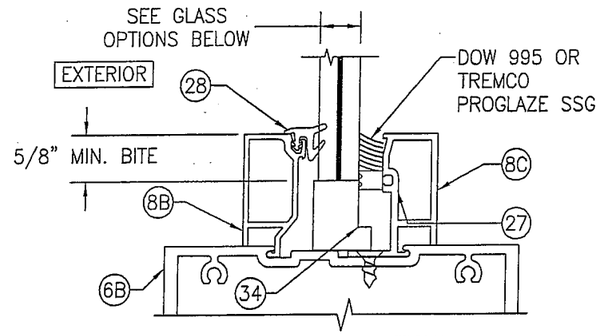

TYP. GLAZING DETAIL
(WET GLAZED; DOUBLE GLAZING BEAD CONDITION)

GLASS OPTIONS (WET GLAZED):

OPTION 1: 9/16" THICK LAMINATED GLASS BY SOLUTIA (1/4" HT. ST./0.09 SOLUTIA SAFLEX/1/4" HT. ST.)
OPTION 2: 9/16" THICK LAMINATED GLASS BY DUPONT (1/4" HT. ST./0.09 DUPONT BUTICITE PVB/1/4" HT. ST.)
OPTION 3: 9/16" THICK LAMINATED GLASS BY DUPONT (1/4" HT. ST./0.09 DUPONT SG/1/4" HT. ST.)
OPTION 4: 9/16" THICK LAMINATED GLASS BY SOLUTIA (1/4" HT. ST./0.10 SOLUTIA SAFLEX HP/1/4" HT. ST.)

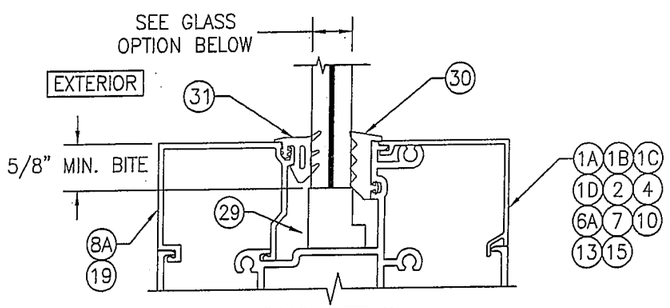

TYP. GLAZING DETAIL
(DRY GLAZED; SINGLE GLAZING BEAD CONDITION)

GLASS OPTION (DRY GLAZED):

OPTION 5: 9/16" THICK LAMINATED GLASS BY DUPONT (1/4" HT. ST./0.09 DUPONT SG/1/4" HT. ST.)

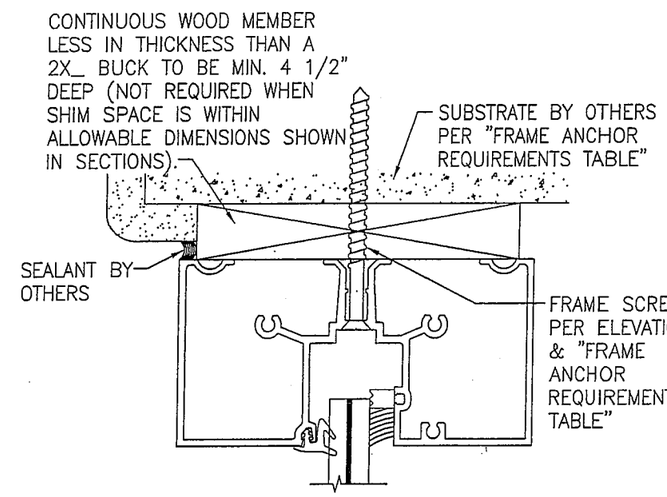

OPTIONAL DIRECT MOUNT DETAIL
TO SUBSTRATE WITH SPACER

* HEAD SECTION SHOWN WITH HEAD FRAME PART #1B; SILL & SIDES WITH OTHER APPLICABLE FRAME PARTS MAY BE INSTALLED THE SAME (NOT APPLICABLE WITH STRAP ANCHOR INSTALLATIONS).

(FOR DETAIL NOT SHOWN, SEE OTHER SECTIONS)

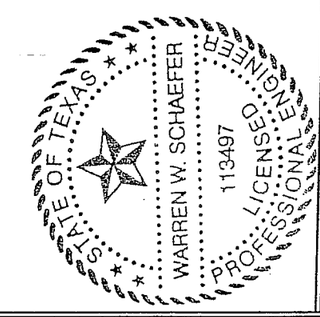

NO.	REVISION DESCRIPTION	BY	DATE

DRAWN BY: W.R.M. | CHECKED BY: W.W.S.
PLOT: 1=2 | DATE: 03/19/13

DRAWING TITLE: IR500 ALUMINUM STORE FRONT SYSTEM – LARGE MISSILE IMPACT

JOB INFORMATION: KAWNEER COMPANY, INC. 555 GUTHRIDGE COURT NORCROSS, GA 30092 770-449-5555

CONSULTANTS: W. W. SCHAEFER ENGINEERING & CONSULTING, P.A. (REG. NO. F-14980) 7480 150TH COURT NORTH PALM BEACH GARDENS, FL 33418 PHONE: 561-744-3424

CERTIFICATION: MAR 20 2013
WARREN W. SCHAEFER, P.E.
P.E. NO. 113497

DRAWING NO. 1633T | REV.

SHEET NO. 8 OF 10

MULLION END CONNECTION DETAILS AT VERTICAL MULLIONS ALONG SIDE DOORS

(TYPICAL AT SILL ONLY)

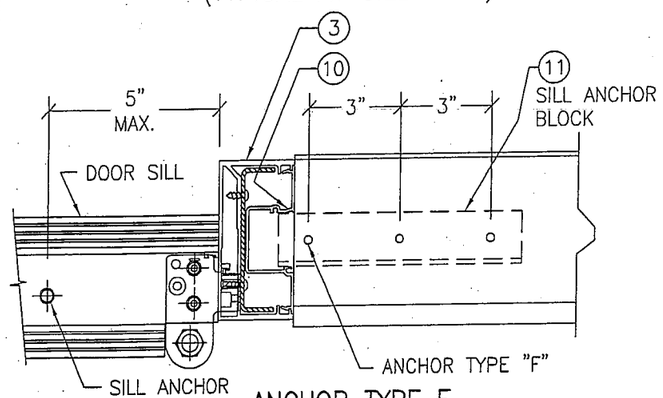

ANCHOR TYPE F

(3 ANCHORS PER SILL ANCHOR BLOCK)

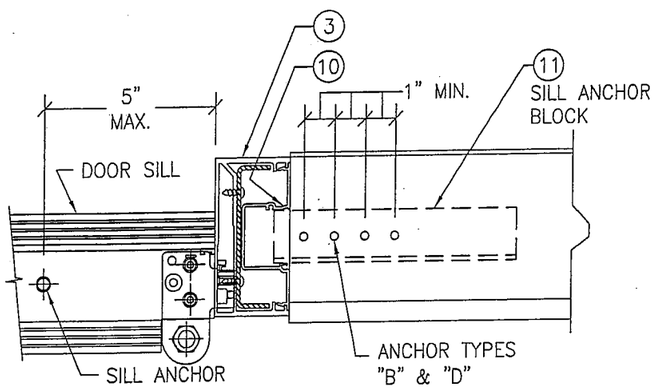

ANCHOR TYPE B

(4 ANCHORS PER SILL ANCHOR BLOCK)

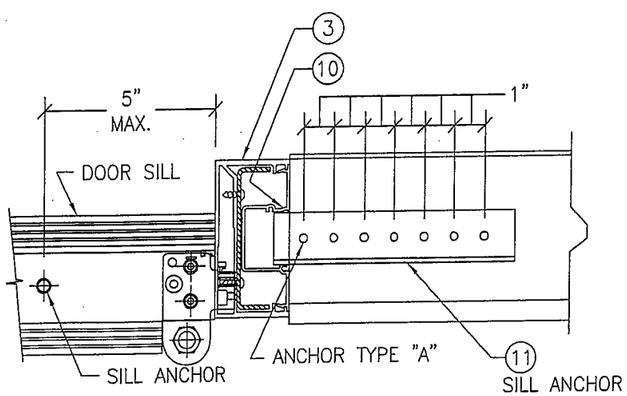

ANCHOR TYPES A & D

(7 ANCHORS PER SILL ANCHOR BLOCK)

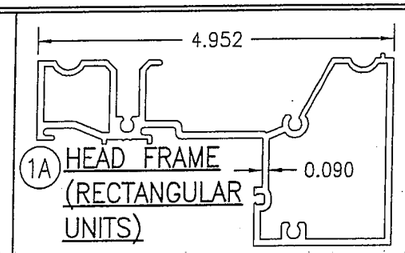

1A HEAD FRAME (RECTANGULAR UNITS)

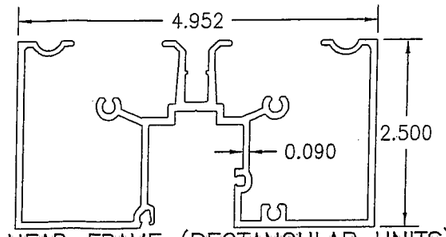

1B HEAD FRAME (RECTANGULAR UNITS)

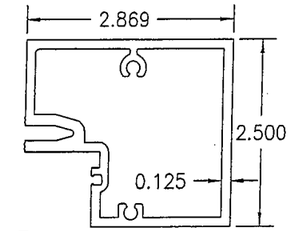

1C HEAD FRAME (RADIUS & RECTANGULAR UNITS)

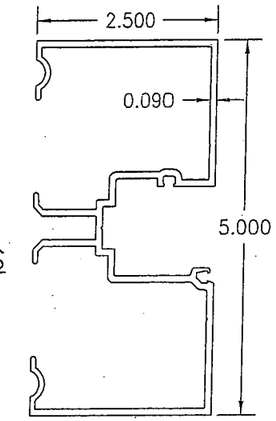

2 JAMB

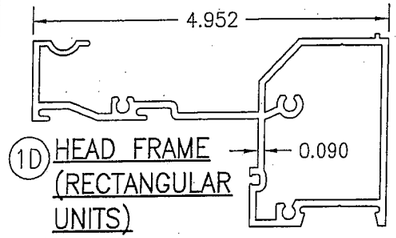

1D HEAD FRAME (RECTANGULAR UNITS)

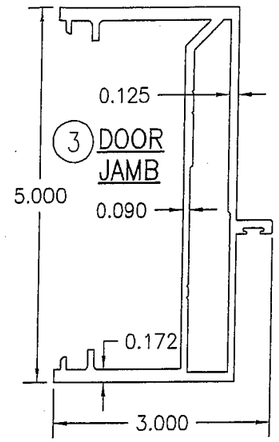

3 DOOR JAMB

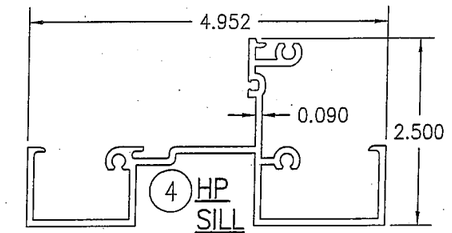

4 HP SILL

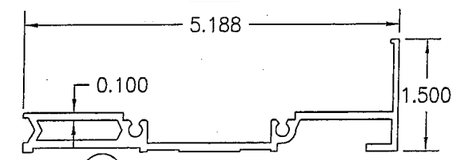

5 HP SILL FLASHING

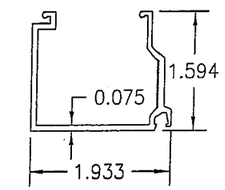

8A GLASS STOP

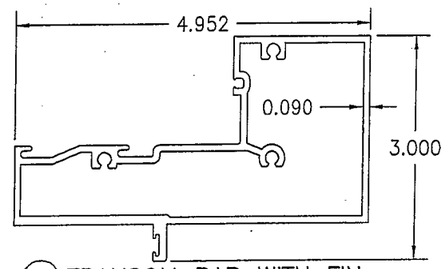

6A TRANSOM BAR WITH FIN

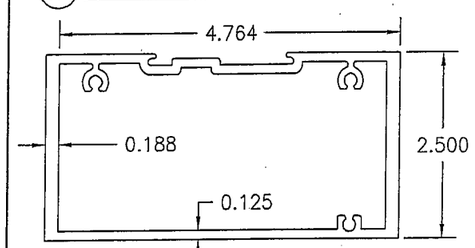

6B C.O.C. BAR WITH OUT FIN

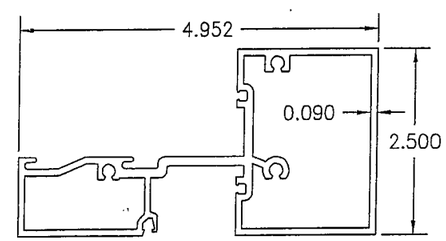

7 HORIZONTAL

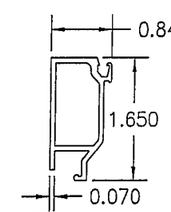

8B GLASS STOP

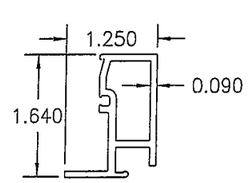

8C GLASS STOP

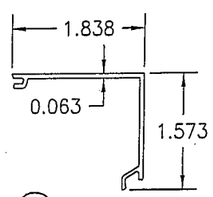

9 HP COVER

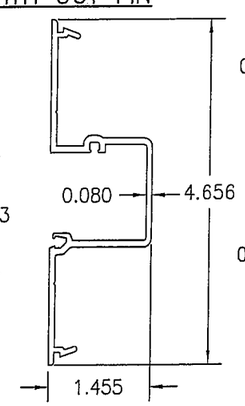

10 DEEP POCKET FILLER

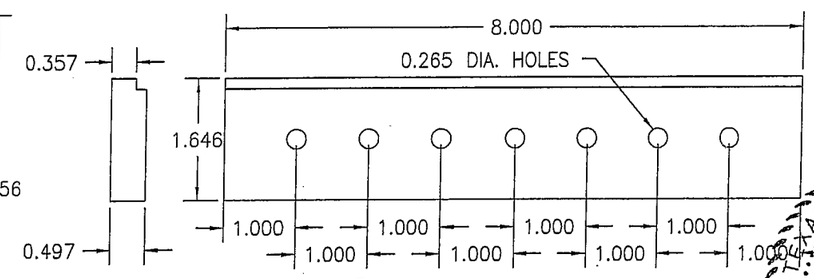

11 ANCHOR BLOCK AT DOOR JAMB

STATE OF TEXAS
WARREN W. SCHAEFER
113497
LICENSED PROFESSIONAL ENGINEER

NO.	REVISION DESCRIPTION	BY	DATE

DRAWN BY: W.R.M. | CHECKED BY: W.W.S.
PLOT: 1=2 | DATE: 03/19/13

DRAWING TITLE: IR500 ALUMINUM STORE FRONT SYSTEM – LARGE MISSILE IMPACT

JOB INFORMATION:

KAWNEER COMPANY, INC.
555 GUTHRIDGE COURT
NORCROSS, GA 30092
770-449-5555

CONSULTANTS
W. W. SCHAEFER ENGINEERING & CONSULTING, P.A. (REG. NO. F-14980)
7480 150TH COURT NORTH
PALM BEACH GARDENS, FL 33418
PHONE: 561-744-3424

CERTIFICATION
MAR 20 2013
WARREN W. SCHAEFER, P.E.
P.E. NO. 113497

DRAWING NO. 1633T | REV.

SHEET NO. 9 OF 10

ITEM #	ITEM DESCRIPTION	MANUFACTURER/NOTES
	PARTS	
1A	HEAD FRAME (RECTANGULAR UNITS)	6063–T6 ALUMINUM
1B	HEAD FRAME (RECTANGULAR UNITS)	6063–T6 ALUMINUM
1C	HEAD FRAME (RADIUS & RECTANGULAR UNITS)	6063–T6 ALUMINUM
1D	HEAD FRAME (RECTANGULAR UNITS)	6063–T6 ALUMINUM
2	JAMB	6063–T6 ALUMINUM
3	DOOR JAMB	6063–T6 ALUMINUM
4	HP SILL	6063–T6 ALUMINUM
5	HP SILL FLASHING	6063–T6 ALUMINUM
6A	TRANSOM BAR WITH FIN	6063–T6 ALUMINUM
6B	C.O.C. TRANSOM BAR	6063–T6 ALUMINUM
7	HORIZONTAL	6063–T6 ALUMINUM
8A	GLASS STOP	6063–T6 ALUMINUM
8B	GLASS STOP	6063–T6 ALUMINUM
8C	GLASS STOP	6063–T6 ALUMINUM
9	HP COVER	6063–T6 ALUMINUM
10	DEEP POCKET FILLER	6063–T6 ALUMINUM
11	ANCHOR BLOCK AT DOOR JAMB	6063–T6 ALUMINUM
12	WATER DEFLECTOR	6063–T6 ALUMINUM
13	POCKET INSERT	6063–T6 ALUMINUM
14	POCKET FILLER	6063–T6 ALUMINUM
15	HW MULLION	6063–T6 ALUMINUM
16A	STEEL REINF.	A36 STEEL
16B	STEEL REINF.	A36 STEEL
17	POCKET INSERT	6063–T6 ALUMINUM
18	PRESSURE PLATE	6063–T6 ALUMINUM
19	PRESSURE PLATE COVER	6063–T6 ALUMINUM
20	DOOR STOP	6063–T6 ALUMINUM
21	SHEAR BLOCK	6063–T6 ALUMINUM (PART #450–140)
22	STRAP ANCHOR	6063–T6 ALUMINUM
23	SNAP–IN FILLER	6063–T6 ALUMINUM
	SEALS AND SEALANTS	
25	DOOR BULB WEATHERING	ALCRYN
26	SILL TO FLASHING GASKET	CCN SPONGE
27	SLIDE IN SPACER	SANTOPRENE (PART #127–012)
28	STANDARD PUSH ON GLAZING GASKET	EPDM (DUROMETER = 70) (PART #027–074)
29	SETTING BLOCK	EPDM
30	INTERIOR FIXED GLAZING GASKET	EPDM (DUROMETER = SPONGE) (PART #127–146)
31	EXTERIOR PUSH IN GLAZING GASKET	EPDM (DUROMETER = 70) (PART #127–147)
32	GASKET	EPDM (DUROMETER = 70)
33	THERMAL SEPARATOR	EPDM (DUROMETER = 70)
34	SETTING BLOCK	EPDM
	FASTENERS	
38	NO. 12 X 7/16" S.S. PHTF SCREW	1.5" & 4.5" FROM ENDS & 16 1/4" MAX. O.C.
39	NO. 12 X 5/8" S.S. PHTF SCREW	4" FROM ENDS (2 ROWS)
40	1/4" X 1" S.S. HWHTF SCREW	3" FROM ENDS & MAX. 9" O.C.
41	NO. 10 X 1/2" S.S. FHTF SCREW	3" FROM ENDS & MAX. 18" O.C.
42	NO. 10 X 1 5/8" S.S. FHTF SCREW	1" FROM ENDS; 4 GROUPED AT MID–SPAN; 16" MAX. BETWEEN
43	NO. 12 X 1 7/8" FHTF SCREW	4 PER SHEAR BLOCK
44	NO. 12 X 1" FHTF SCREW	3 PER SHEAR BLOCK

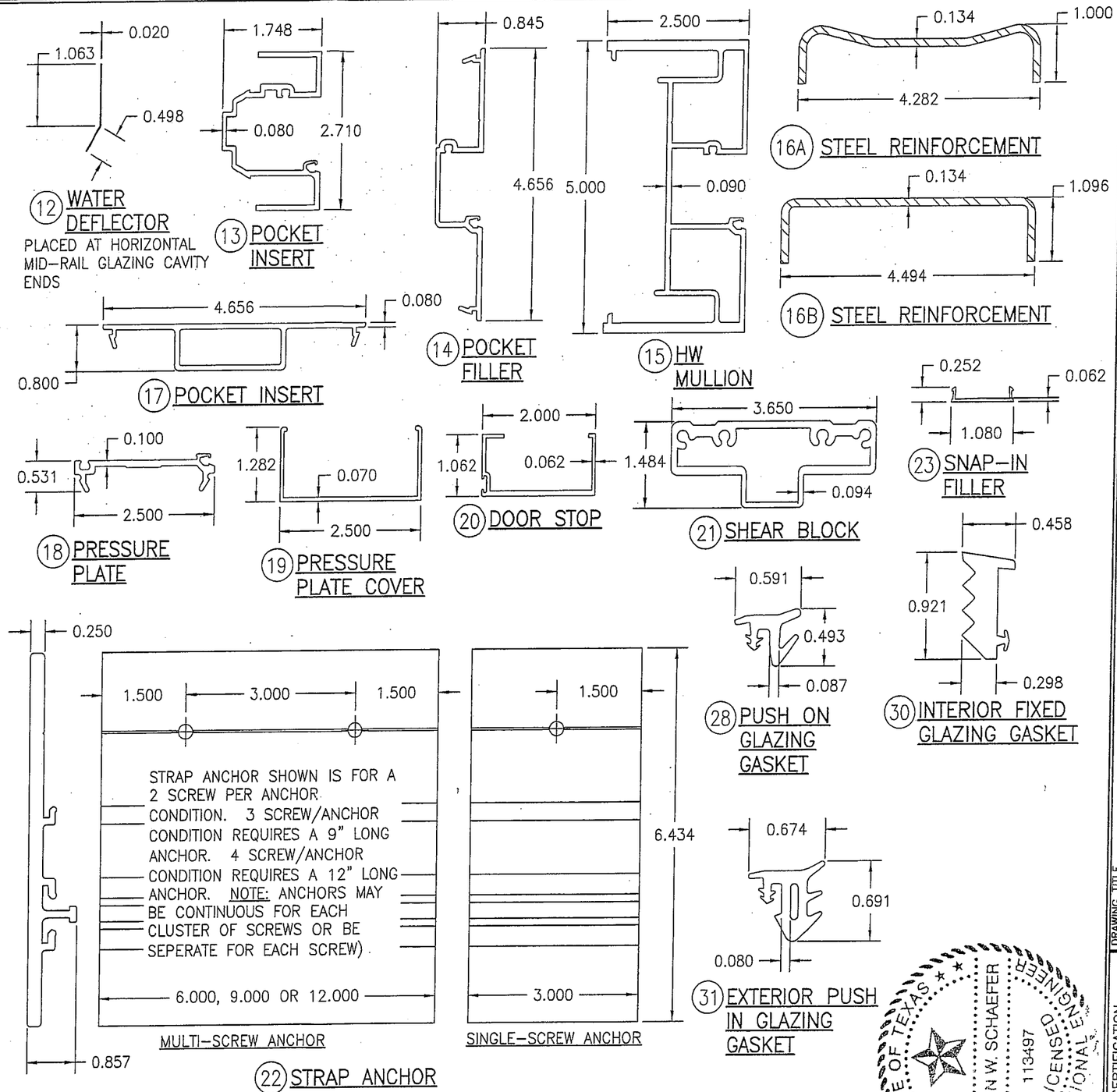

DRAWN BY: W.R.M.	CHECKED BY: W.W.S.
PLOT: 1=2	DATE: 03/19/13

NO.	REVISION DESCRIPTION	BY	DATE

DRAWING TITLE
IR500 ALUMINUM STORE FRONT SYSTEM – LARGE MISSILE IMPACT

JOB INFORMATION:
KAWNEER COMPANY, INC.
555 GUTHRIDGE COURT
NORCROSS, GA 30092
770–449–5555

CONSULTANTS
W. W. SCHAEFER ENGINEERING & CONSULTING, P.A. (REG. NO. F–14980)
7480 150TH COURT NORTH
PALM BEACH GARDENS, FL 33418
PHONE: 561–744–3424

CERTIFICATION
MAR 20 2013
WARREN W. SCHAEFER, P.E.
P.E. NO. 113497

STATE OF TEXAS
WARREN W. SCHAEFER
113497
LICENSED PROFESSIONAL ENGINEER

DRAWING NO. 1633T
REV.
SHEET NO. 10 OF 10