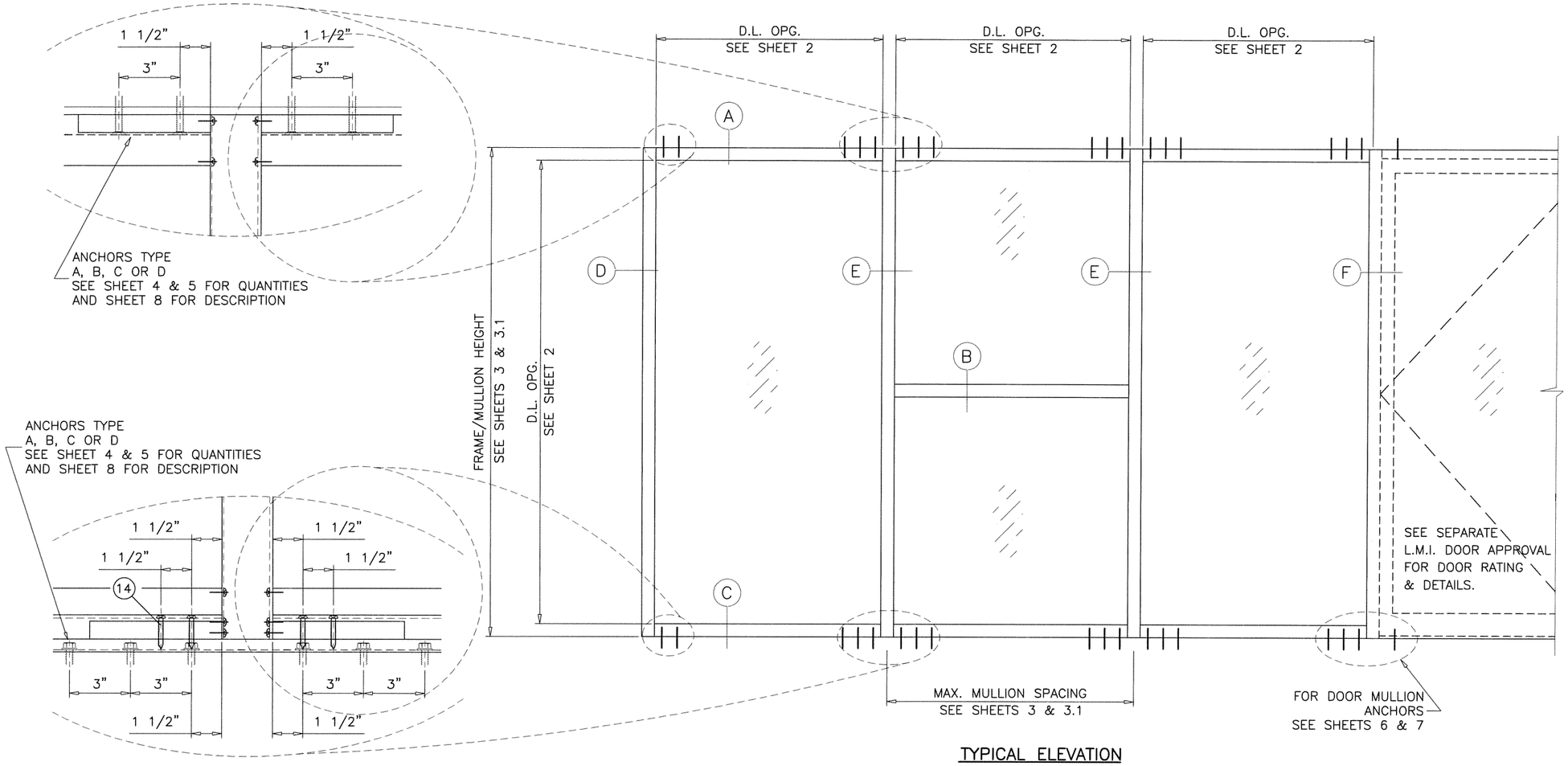

TYPICAL ELEVATION

YHS-50 TU
ALUMINUM STOREFRONT SYSTEM

THIS SYSTEM MAY BE USED IN CONJUNCTION WITH IRC/IBC APPROVED LARGE MISSILE IMPACT RESISTANT ENTRANCE DOORS.
LOWER DESIGN PRESSURE FROM STOREFRONT OR DOOR APPROVAL WILL APPLY TO ENTIRE SYSTEM.

CODE REQUIREMENTS FOR SAFEGUARDS MUST BE OBSERVED.

THIS PRODUCT HAS BEEN DESIGNED AND TESTED TO COMPLY WITH THE REQUIREMENTS OF THE 2006 INTERNATIONAL RESIDENTIAL CODE (IRC) AND 2006 INTERNATIONAL BUILDING CODE (IBC) WITH TEXAS REVISIONS.
TESTING PERFORMED IN ACCORDANCE WITH FLORIDA PROTOCOLS TAS201, 202 & 203.

WOOD BUCKS BY OTHERS, MUST BE ANCHORED PROPERLY TO TRANSFER LOADS TO THE STRUCTURE.

ANCHORS SHALL BE AS LISTED, SPACED AS SHOWN ON DETAILS, ANCHORS EMBEDMENT TO BASE MATERIAL SHALL BE BEYOND WALL DRESSING OR STUCCO.

ANCHORING OR LOADING CONDITIONS NOT SHOWN IN THESE DETAILS ARE NOT PART OF THIS APPROVAL.

A LOAD DURATION INCREASE IS USED IN DESIGN OF ANCHORS INTO WOOD ONLY.

MATERIALS INCLUDING BUT NOT LIMITED TO STEEL/METAL SCREWS, THAT COME INTO CONTACT WITH OTHER DISSIMILAR MATERIALS SHALL MEET THE REQUIREMENTS OF THE INTL. RESIDENTIAL CODE (IRC) AND INTL. BLDG. CODE (IBC) WITH TEXAS REVISIONS.

THIS SYSTEM IS RATED FOR LARGE & SMALL MISSILE IMPACT.
SHUTTERS ARE NOT REQUIRED.

INSTRUCTIONS:

USE CHARTS AS FOLLOWS.

STEP 1 DETERMINE DESIGN WIND LOAD REQUIREMENTS BASED ON WIND VELOCITY, BLDG. HEIGHT, WIND ZONE USING APPLICABLE ASCE 7 STANDARD.

STEP 2 SEE CHARTS ON SHEETS 2 FOR DESIGN LOAD CAPACITY OF DESIRED GLASS SIZE.

STEP 3 CHECK MULLION CAPACITY FOR A GIVEN SPACING AND HEIGHT USING CHARTS ON SHEETS 3 & 3.1 FOR STOREFRONT MULLION AND SHEETS 6 & 7 FOR DOOR MULLION
THE CAPACITY SHOULD EXCEED THE DESIGN LOAD.

STEP 4 USING CHART ON SHEETS 4 & 5 SELECT ANCHOR OPTION WITH DESIGN RATING MORE THAN DESIGN LOAD SPECIFIED IN STEP 1 ABOVE.

STEP 5 THE LOWEST VALUE RESULTING FROM STEPS 2, 3 AND 4 SHALL APPLY TO ENTIRE SYSTEM.

INSULATING LAMINATED GLASS
LARGE MISSILE IMPACT

STATE OF TEXAS
JAVAD AHMADI
106516
LICENSED
PROFESSIONAL ENGINEER
Date & Time: 02/17/15 12:12

AL-FAROOQ CORPORATION
ENGINEERS & PRODUCT DEVELOPMENT
1235 S.W. 87 AVE
MIAMI, FLORIDA 33174
TEL. (305) 264-8100 FAX. (305) 262-6978
STORE\W14-35YKK

YKK AP AMERICA INC.
1229 HIGHWAY 441 BYPASS
DUBLIN, GEORGIA 31021
TEL.(478) 277-1955 FAX(478) 277-1978

YHS-50 TU ALUM STOREFRONT SYSTEM (L.M.I.)

revisions:			
no	date	by	description

date: 09-30-14
scale: 1/2"=1'-0"
dr. by: HAMID
chk. by:

drawing no.
W14-35

GLASS LOAD CAPACITY – PSF		
NOMINAL DIMS.		LAMINATED INSUL. GLASS
D.L.O. WIDTH	D.L.O. HEIGHT	EXT.(+) & INT.(–)
24"	79"	70.0
30"		70.0
36"		70.0
42"		70.0
48"		70.0
54"		70.0
60"		70.0
66"		70.0
72"		70.0
24"	85"	70.0
30"		70.0
36"		70.0
42"		70.0
48"		70.0
54"		70.0
60"		70.0
66"		70.0
24"	91"	70.0
30"		70.0
36"		70.0
42"		70.0
48"		70.0
54"		70.0
60"		70.0
24"	97"	70.0
30"		70.0
36"		70.0
42"		70.0
48"		70.0
54"		70.0
60"		70.0
24"	103"	70.0
30"		70.0
36"		70.0
42"		70.0
48"		70.0
54"		70.0
24"	109"	70.0
30"		70.0
36"		70.0
42"		70.0
48"		70.0
54"		70.0
24"	115"	70.0
30"		70.0
36"		70.0
42"		70.0
48"		70.0

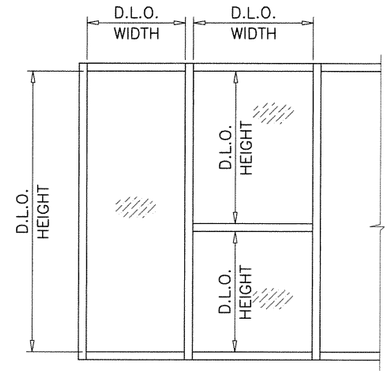

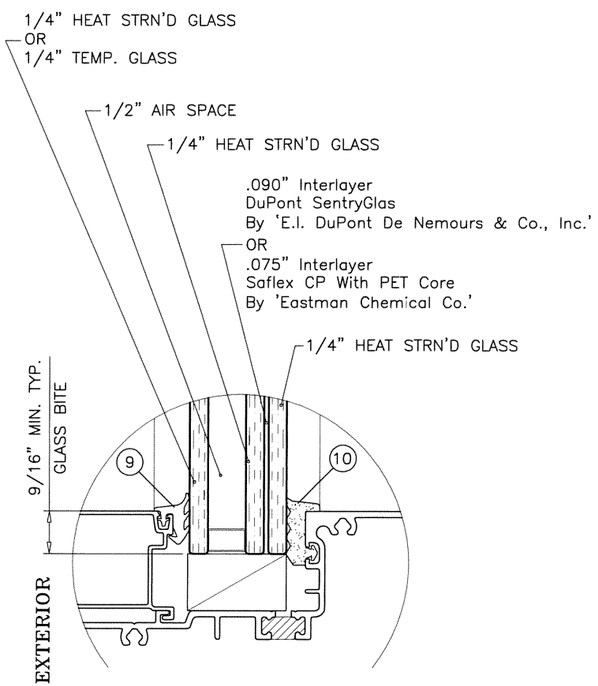

GLAZING DETAIL

1/2" AIR SPACE CONSISTING OF:

SPACER:
ALUMINUM BOX SPACER AROUND THE PERIMETER OF THE GLASS.

PRIMARY SEALANT:
TYPE PIB–29 MANUFACTURED BY ADCO.

SECONDARY SEALANT:
TYPE GE–3723 A&B TWO PART SILICONE MANUFACTURED BY GE.

NOTE:
GLASS CAPACITIES ON THIS SHEET ARE BASED ON ASTM E1300–09 (3 SEC. GUSTS).

DRY GLAZED

STATE OF TEXAS
JAVAD AHMAD
106516
LICENSED
PROFESSIONAL ENGINEER
Date & Time: 02/17/15 12:52

AL-FAROOQ CORPORATION
ENGINEERS & PRODUCT DEVELOPMENT
1235 S.W. 87 AVE
MIAMI, FLORIDA 33174
TEL. (305) 264-8100 FAX. (305) 262-6978

STORE\W14–35YKK

YHS–50 TU ALUM STOREFRONT SYSTEM (L.M.I.)

YKK AP AMERICA INC.
1229 HIGHWAY 441 BYPASS
DUBLIN, GEORGIA 31021
TEL.(478) 277–1955 FAX(478) 277–1978

revisions:

no	date	by	description

date: 09–30–14
scale: 1/2" = 1"
dr. by: HAMID
chk. by:

drawing no.
W14–35

GLASS DESIGN LOAD CAPACITY – PSF			
NOMINAL DIMS.		GLASS TYPE 'A'	GLASS TYPES 'B' & 'C'
D.L.O. WIDTH	D.L.O. HEIGHT	EXT. (+) INT. (–)	EXT. (+) INT. (–)
24"	61"	70.0	50.0
30"		70.0	50.0
36"		70.0	50.0
42"		70.0	50.0
48"		70.0	50.0
54"		70.0	50.0
60"		70.0	50.0
66"		70.0	50.0
72"		70.0	50.0
24"	67"	70.0	50.0
30"		70.0	50.0
36"		70.0	50.0
42"		70.0	50.0
48"		70.0	50.0
54"		70.0	50.0
60"		70.0	50.0
66"		70.0	50.0
72"		70.0	–
24"	73"	70.0	50.0
30"		70.0	50.0
36"		70.0	50.0
42"		70.0	50.0
48"		70.0	50.0
54"		70.0	50.0
60"		70.0	50.0
66"		70.0	–
72"		70.0	–
24"	79"	70.0	50.0
30"		70.0	50.0
36"		70.0	50.0
42"		70.0	50.0
48"		70.0	50.0
54"		70.0	50.0
60"		70.0	–
66"		70.0	–
72"		70.0	–
24"	85"	70.0	50.0
30"		70.0	50.0
36"		70.0	50.0
42"		70.0	50.0
48"		70.0	50.0
54"		70.0	50.0
60"		70.0	–
66"		70.0	–
24"	91"	70.0	50.0
30"		70.0	50.0
36"		70.0	50.0
42"		70.0	50.0
48"		70.0	50.0
54"		70.0	–
60"		70.0	–

GLASS DESIGN LOAD CAPACITY – PSF			
NOMINAL DIMS.		GLASS TYPE 'A'	GLASS TYPES 'B' & 'C'
D.L.O. WIDTH	D.L.O. HEIGHT	EXT. (+) INT. (–)	EXT. (+) INT. (–)
24"	97"	70.0	50.0
30"		70.0	50.0
36"		70.0	50.0
42"		70.0	50.0
48"		70.0	50.0
54"		70.0	–
60"		70.0	–
24"	103"	70.0	50.0
30"		70.0	50.0
36"		70.0	50.0
42"		70.0	50.0
48"		70.0	–
54"		70.0	–
24"	109"	70.0	50.0
30"		70.0	50.0
36"		70.0	50.0
42"		70.0	50.0
48"		70.0	–
54"		70.0	–
24"	115"	70.0	50.0
30"		70.0	50.0
36"		70.0	50.0
42"		70.0	–
48"		70.0	–

NOTE:
GLASS CAPACITIES ON THIS SHEET ARE BASED ON ASTM E1300–09 (3 SEC. GUSTS).

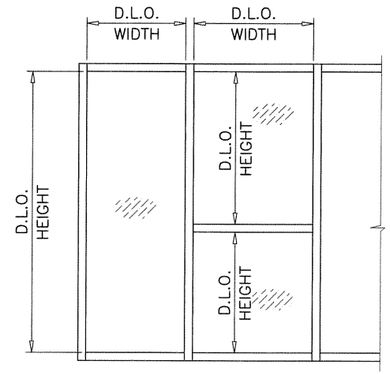

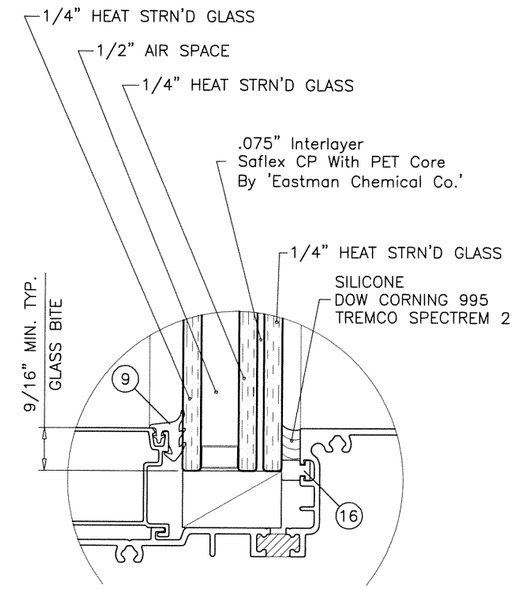

GLASS TYPE 'A'

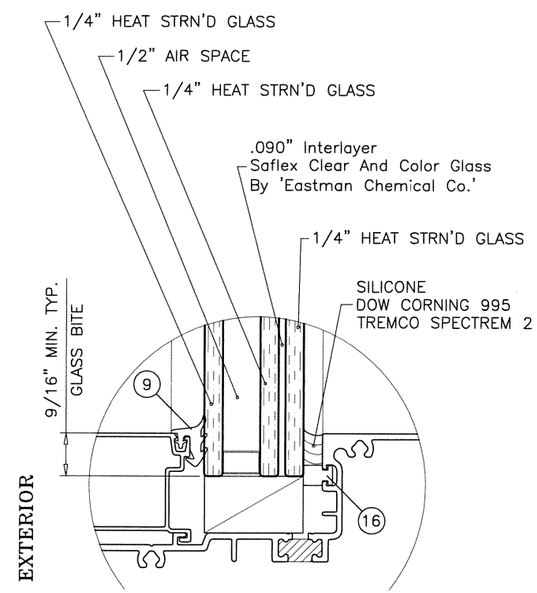

GLASS TYPE 'B'

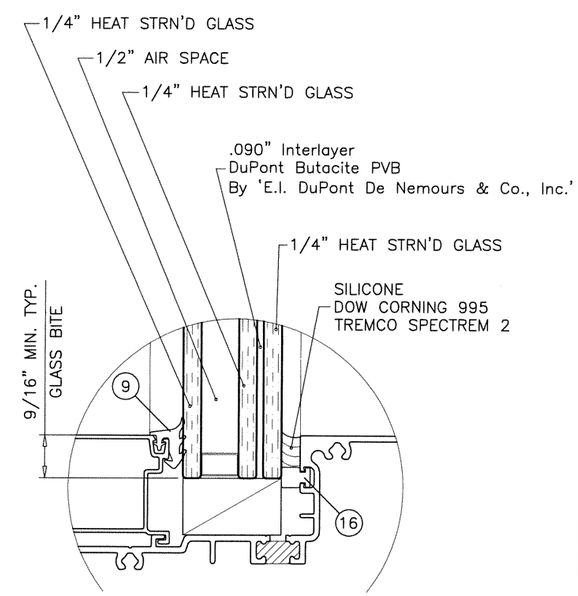

GLASS TYPE 'C'

GLAZING OPTIONS

1/2" AIR SPACE CONSISTING OF:
SPACER:
ALUMINUM BOX SPACER AROUND THE PERIMETER OF THE GLASS.
PRIMARY SEALANT:
TYPE PIB–29 MANUFACTURED BY ADCO.
SECONDARY SEALANT:
TYPE GE–3723 A&B TWO PART SILICONE MANUFACTURED BY GE.

WET GLAZED

STATE OF TEXAS
JAVAD ALIMAHI
106516
LICENSED
PROFESSIONAL ENGINEER
Date & Time: 02/17/15

AL-FAROOQ CORPORATION
ENGINEERS & PRODUCT DEVELOPMENT
1235 S.W. 87 AVE
MIAMI, FLORIDA 33174
TEL. (305) 264-8100 FAX. (305) 262-6978
STORE\W14–35YKK

YKK AP AMERICA INC.
1229 HIGHWAY 441 BYPASS
DUBLIN, GEORGIA 31021
TEL.(478) 277–1955 FAX(478) 277–1978

YHS–50 TU ALUM STOREFRONT SYSTEM (L.M.I.)

revisions:
no	date	by	description

date: 09–30–14
scale: 1/2" = 1"
dr. by: HAMID
chk. by:

drawing no.
W14–35

sheet 2.1 of 11

JAMB/MULLION LOAD CAPACITY – PSF
WITHOUT INTERMEDIATE HORIZONTALS

NOMINAL DIMS.		STANDARD CONFIG.	HEAVY CONFIG.	EXP. MULLION
WIDTH (W)	FRAME HEIGHT	EXT.(+) & INT.(–)	EXT.(+) & INT.(–)	EXT.(+) & INT.(–)
24"	72"	70.0	70.0	70.0
30"		70.0	70.0	70.0
36"		70.0	70.0	70.0
42"		70.0	70.0	70.0
48"		70.0	70.0	70.0
54"		70.0	70.0	70.0
60"		70.0	70.0	70.0
66"		50.0	70.0	70.0
72"		50.0	70.0	70.0
24"	78"	70.0	70.0	70.0
30"		70.0	70.0	70.0
36"		70.0	70.0	70.0
42"		70.0	70.0	70.0
48"		70.0	70.0	70.0
54"		70.0	70.0	70.0
60"		50.0	70.0	70.0
66"		50.0	70.0	70.0
72"		–	70.0	70.0
24"	84"	70.0	70.0	70.0
30"		70.0	70.0	70.0
36"		70.0	70.0	70.0
42"		70.0	70.0	70.0
48"		70.0	70.0	70.0
54"		70.0	70.0	70.0
60"		50.0	70.0	70.0
66"		–	70.0	70.0
72"		–	70.0	70.0
24"	90"	70.0	70.0	70.0
30"		70.0	70.0	70.0
36"		70.0	70.0	70.0
42"		70.0	70.0	70.0
48"		70.0	70.0	70.0
54"		50.0	70.0	70.0
60"		–	70.0	70.0
66"		–	70.0	70.0
72"		–	70.0	70.0
24"	96"	70.0	70.0	70.0
30"		70.0	70.0	70.0
36"		70.0	70.0	70.0
42"		70.0	70.0	70.0
48"		70.0	70.0	70.0
54"		50.0	70.0	70.0
60"		–	70.0	70.0
66"		–	70.0	70.0
24"	102"	50.0	70.0	70.0
30"		50.0	70.0	70.0
36"		50.0	70.0	70.0
42"		50.0	70.0	70.0
48"		50.0	70.0	70.0
54"		–	70.0	70.0
60"		–	70.0	70.0
24"	108"	50.0	70.0	70.0
30"		50.0	70.0	70.0
36"		50.0	70.0	70.0
42"		50.0	70.0	70.0
48"		50.0	70.0	70.0
54"		–	70.0	70.0
60"		–	70.0	70.0

JAMB/MULLION LOAD CAPACITY – PSF
WITHOUT INTERMEDIATE HORIZONTALS

NOMINAL DIMS.		STANDARD CONFIG.	HEAVY CONFIG.	EXP. MULLION
WIDTH (W)	FRAME HEIGHT	EXT.(+) & INT.(–)	EXT.(+) & INT.(–)	EXT.(+) & INT.(–)
24"	114"	50.0	70.0	70.0
30"		50.0	70.0	70.0
36"		50.0	70.0	70.0
42"		47.3	70.0	70.0
48"		–	70.0	70.0
54"		–	63.8	70.0
24"	120"	50.0	70.0	70.0
30"		50.0	70.0	70.0
36"		44.7	70.0	70.0
42"		40.4	67.3	70.0
48"		–	59.8	70.0
54"		–	54.2	66.4

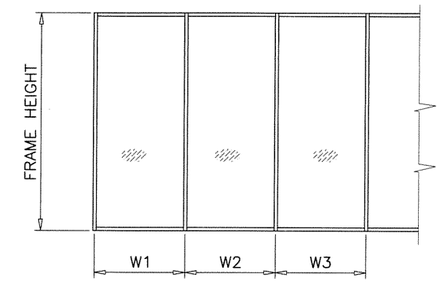

WIDTH (W) = W1 (JAMB)

$$\text{WIDTH (W)} = \frac{W2 + W3}{2} \quad \text{(MULLION)}$$

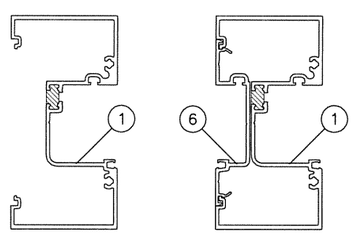

JAMB MULLION

STD. CONFIGURATION

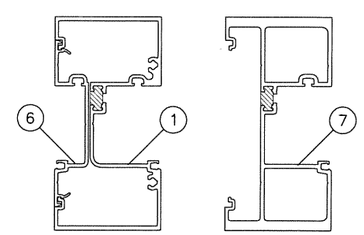

JAMB JAMB

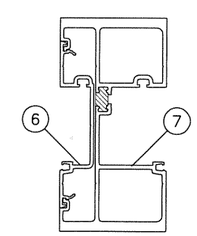

MULLION

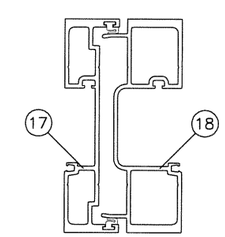

EXPANSION MULLION

HEAVY CONFIGURATION

MULLION

STATE OF TEXAS
JAVAD AMINI
106516
LICENSED
PROFESSIONAL ENGINEER
Date & Time: 02/17/15 12:5

AL-FAROOQ CORPORATION
ENGINEERS & PRODUCT DEVELOPMENT
1235 S.W. 87 AVE
MIAMI, FLORIDA 33174
TEL. (305) 264-8100 FAX. (305) 262-6978

STORE\W14-35YKK

YHS-50 TU ALUM STOREFRONT SYSTEM (L.M.I.)

YKK ap
YKK AP AMERICA INC.
1229 HIGHWAY 441 BYPASS
DUBLIN, GEORGIA 31021
TEL.(478) 277-1955 FAX(478) 277-1978

revisions:			
no	date	by	description

date: 09-30-14
scale: 1/2" = 1"
dr. by: HAMID
chk. by:

drawing no. W14-35

JAMB/MULLION LOAD CAPACITY – PSF WITH INTERMEDIATE HORIZONTALS				
NOMINAL DIMS.		STANDARD CONFIG.	HEAVY CONFIG.	EXP. MULLION
WIDTH (W)	FRAME HEIGHT	EXT.(+) & INT.(–)	EXT.(+) & INT.(–)	EXT.(+) & INT.(–)
24"	78"	70.0	70.0	70.0
30"		70.0	70.0	70.0
36"		70.0	70.0	70.0
42"		70.0	70.0	70.0
48"		70.0	70.0	70.0
54"		70.0	70.0	70.0
60"		50.0	70.0	70.0
24"	84"	70.0	70.0	70.0
30"		70.0	70.0	70.0
36"		70.0	70.0	70.0
42"		70.0	70.0	70.0
48"		70.0	70.0	70.0
54"		70.0	70.0	70.0
60"		50.0	70.0	70.0
24"	90"	70.0	70.0	70.0
30"		70.0	70.0	70.0
36"		70.0	70.0	70.0
42"		70.0	70.0	70.0
48"		70.0	70.0	70.0
54"		50.0	70.0	70.0
60"		–	70.0	70.0
24"	96"	70.0	70.0	70.0
30"		70.0	70.0	70.0
36"		70.0	70.0	70.0
42"		70.0	70.0	70.0
48"		63.3	70.0	70.0
54"		50.0	70.0	70.0
60"		–	70.0	70.0
24"	102"	50.0	70.0	70.0
30"		50.0	70.0	70.0
36"		50.0	70.0	70.0
42"		50.0	70.0	70.0
48"		50.0	70.0	70.0
54"		–	70.0	70.0
60"		–	70.0	70.0
24"	108"	50.0	70.0	70.0
30"		50.0	70.0	70.0
36"		50.0	70.0	70.0
42"		50.0	70.0	70.0
48"		46.2	70.0	70.0
54"		–	68.5	70.0
60"		–	61.7	70.0

JAMB/MULLION LOAD CAPACITY – PSF WITH INTERMEDIATE HORIZONTALS				
NOMINAL DIMS.		STANDARD CONFIG.	HEAVY CONFIG.	EXP. MULLION
WIDTH (W)	FRAME HEIGHT	EXT.(+) & INT.(–)	EXT.(+) & INT.(–)	EXT.(+) & INT.(–)
24"	114"	50.0	70.0	70.0
30"		50.0	70.0	70.0
36"		50.0	70.0	70.0
42"		44.9	70.0	70.0
48"		–	65.6	70.0
54"		–	58.3	69.9
24"	120"	50.0	70.0	70.0
30"		50.0	70.0	70.0
36"		44.9	70.0	70.0
42"		38.5	64.2	70.0
48"		–	56.2	68.9
54"		–	50.0	61.2

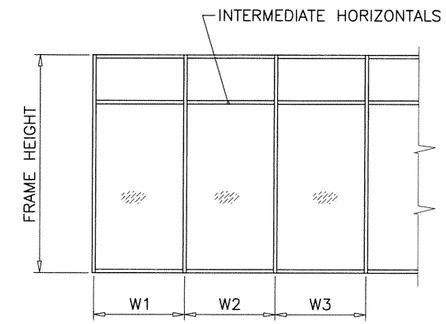

WIDTH (W) = W1 (JAMB)

$$\text{WIDTH (W)} = \frac{W2 + W3}{2} \quad \text{(MULLION)}$$

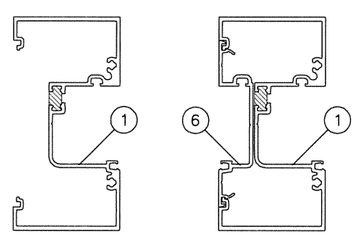

JAMB MULLION

STD. CONFIGURATION

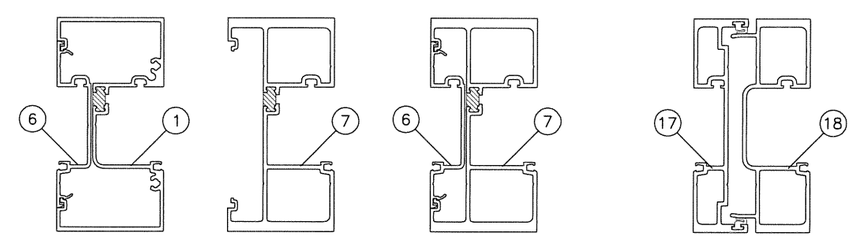

JAMB JAMB MULLION EXPANSION MULLION

HEAVY CONFIGURATION

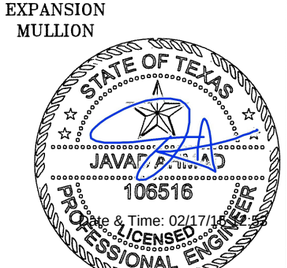

Date & Time: 02/17/15 12:53

MULLION

afc

AL-FAROOQ CORPORATION
ENGINEERS & PRODUCT DEVELOPMENT
1235 S.W. 87 AVE
MIAMI, FLORIDA 33174
TEL. (305) 264-8100 FAX. (305) 262-6978

STORE\W14-35YKK

YHS-50 TU ALUM STOREFRONT SYSTEM (L.M.I.)

YKK AP AMERICA INC.
1229 HIGHWAY 441 BYPASS
DUBLIN, GEORGIA 31021
TEL.(478) 277-1955 FAX(478) 277-1978

revisions:

no	date	by	description

date: 09-30-14
scale: 1/2" = 1"
dr. by: HAMID
chk. by:

drawing no.
W14-35

sheet 3.1 of 11

ANCHOR LOAD CAPACITY – PSF EXT.(+) & INT.(–)				
NOMINAL DIMS.		ANCHORS TYPE 'A'		ANCHORS TYPE 'B'
WIDTH (W)	FRAME HEIGHT	A2	A3	B2
30"	72"	70.0	70.0	70.0
33"		70.0	70.0	70.0
36"		70.0	70.0	70.0
39"		70.0	70.0	70.0
42"		70.0	70.0	70.0
45"		70.0	70.0	70.0
48"		70.0	70.0	70.0
51"		70.0	70.0	70.0
54"		70.0	70.0	70.0
57"		70.0	70.0	70.0
60"		70.0	70.0	70.0
63"		70.0	70.0	70.0
66"		70.0	70.0	70.0
69"		68.2	70.0	70.0
72"		65.3	70.0	70.0
30"	78"	70.0	70.0	70.0
33"		70.0	70.0	70.0
36"		70.0	70.0	70.0
39"		70.0	70.0	70.0
42"		70.0	70.0	70.0
45"		70.0	70.0	70.0
48"		70.0	70.0	70.0
51"		70.0	70.0	70.0
54"		70.0	70.0	70.0
57"		70.0	70.0	70.0
60"		70.0	70.0	70.0
63"		68.9	70.0	70.0
66"		65.8	70.0	70.0
69"		62.9	70.0	70.0
72"		60.3	70.0	70.0
30"	84"	70.0	70.0	70.0
33"		70.0	70.0	70.0
36"		70.0	70.0	70.0
39"		70.0	70.0	70.0
42"		70.0	70.0	70.0
45"		70.0	70.0	70.0
48"		70.0	70.0	70.0
51"		70.0	70.0	70.0
54"		70.0	70.0	70.0
57"		70.0	70.0	70.0
60"		67.2	70.0	70.0
63"		64.0	70.0	70.0
66"		61.1	70.0	70.0
69"		58.4	70.0	70.0
72"		56.0	70.0	70.0

ANCHOR LOAD CAPACITY – PSF EXT.(+) & INT.(–)				
NOMINAL DIMS.		ANCHORS TYPE 'A'		ANCHORS TYPE 'B'
WIDTH (W)	FRAME HEIGHT	A2	A3	B2
30"	90"	70.0	70.0	70.0
33"		70.0	70.0	70.0
36"		70.0	70.0	70.0
39"		70.0	70.0	70.0
42"		70.0	70.0	70.0
45"		70.0	70.0	70.0
48"		70.0	70.0	70.0
51"		70.0	70.0	70.0
54"		69.7	70.0	70.0
57"		66.0	70.0	70.0
60"		62.7	70.0	70.0
63"		59.7	70.0	70.0
66"		57.0	70.0	70.0
69"		54.5	70.0	70.0
72"		52.3	70.0	70.0
30"	96"	70.0	70.0	70.0
33"		70.0	70.0	70.0
36"		70.0	70.0	70.0
39"		70.0	70.0	70.0
42"		70.0	70.0	70.0
45"		70.0	70.0	70.0
48"		70.0	70.0	70.0
51"		69.2	70.0	70.0
54"		65.3	70.0	70.0
57"		61.9	70.0	70.0
60"		58.8	70.0	70.0
63"		56.0	70.0	70.0
66"		53.5	70.0	70.0
69"		51.1	70.0	70.0
72"		49.0	70.0	70.0
30"	102"	70.0	70.0	70.0
33"		70.0	70.0	70.0
36"		70.0	70.0	70.0
39"		70.0	70.0	70.0
42"		70.0	70.0	70.0
45"		70.0	70.0	70.0
48"		69.2	70.0	70.0
51"		65.1	70.0	70.0
54"		61.5	70.0	70.0
57"		58.3	70.0	70.0
60"		55.3	70.0	70.0
63"		52.7	70.0	70.0
66"		50.3	70.0	70.0
69"		48.1	70.0	70.0

ANCHOR LOAD CAPACITY – PSF EXT.(+) & INT.(–)				
NOMINAL DIMS.		ANCHORS TYPE 'A'		ANCHORS TYPE 'B'
WIDTH (W)	FRAME HEIGHT	A2	A3	B2
30"	108"	70.0	70.0	70.0
33"		70.0	70.0	70.0
36"		70.0	70.0	70.0
39"		70.0	70.0	70.0
42"		70.0	70.0	70.0
45"		69.7	70.0	70.0
48"		65.3	70.0	70.0
51"		61.5	70.0	70.0
54"		58.1	70.0	70.0
57"		55.0	70.0	70.0
60"		52.3	70.0	70.0
63"		49.8	70.0	70.0
66"		47.5	70.0	70.0
30"	114"	70.0	70.0	70.0
33"		70.0	70.0	70.0
36"		70.0	70.0	70.0
39"		70.0	70.0	70.0
42"		70.0	70.0	70.0
45"		66.0	70.0	70.0
48"		61.9	70.0	70.0
51"		58.3	70.0	70.0
54"		55.0	70.0	70.0
57"		52.1	70.0	70.0
60"		49.5	70.0	70.0
63"		47.2	70.0	70.0
30"	120"	70.0	70.0	70.0
33"		70.0	70.0	70.0
36"		70.0	70.0	70.0
39"		70.0	70.0	70.0
42"		67.2	70.0	70.0
45"		62.7	70.0	70.0
48"		58.8	70.0	70.0
51"		55.3	70.0	70.0
54"		52.3	70.0	70.0
57"		49.5	70.0	70.0
60"		47.0	70.0	70.0

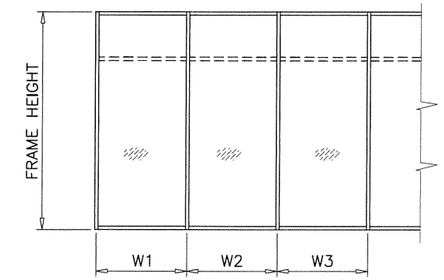

WIDTH (W) = W1 (JAMB)

$$\text{WIDTH (W)} = \frac{W2 + W3}{2} \quad \text{(MULLION)}$$

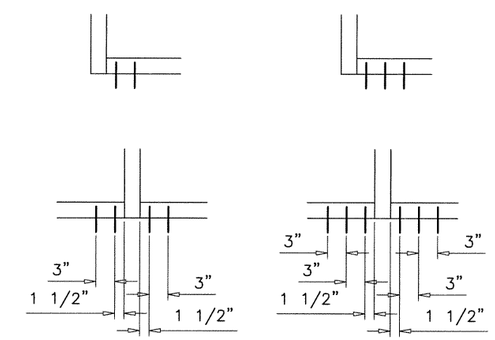

A2, B2, A3

ANCHORS TYPES: SEE SHEET 8 FOR DESCRIPTION

A2 = (2) ANCHORS TYPE 'A' AT JAMB OR EACH SIDE OF MULLION
A3 = (3) ANCHORS TYPE 'A' AT JAMB OR EACH SIDE OF MULLION

B2 = (2) ANCHORS TYPE 'B' AT JAMB OR EACH SIDE OF MULLION

ALL OTHER ANCHORS TO BE SPACED AS PER ELEVATION.

STATE OF TEXAS
JAVAD AHMAD
106516
LICENSED PROFESSIONAL ENGINEER
Date & Time: 02/17/15 2:55

ANCHORS

AL-FAROOQ CORPORATION
ENGINEERS & PRODUCT DEVELOPMENT
1235 S.W. 87 AVE
MIAMI, FLORIDA 33174
TEL. (305) 264-8100 FAX. (305) 262-6978

STORE\W14-35YKK

YHS-50 TU ALUM STOREFRONT SYSTEM (L.M.I.)

YKK AP AMERICA INC.
1229 HIGHWAY 441 BYPASS
DUBLIN, GEORGIA 31021
TEL.(478) 277-1955 FAX(478) 277-1978

revisions:			
no	date	by	description

date: 09-30-14
scale: –
dr. by: HAMID
chk. by:

drawing no. W14-35

ANCHOR LOAD CAPACITY – PSF
EXT.(+) & INT.(–)

NOMINAL DIMS.		ANCHORS TYPE 'C'			ANCHORS TYPE 'D'	
WIDTH (W)	FRAME HEIGHT	C2	C3	C4	D2	D3
30"	72"	70.0	70.0	70.0	70.0	70.0
33"		70.0	70.0	70.0	70.0	70.0
36"		70.0	70.0	70.0	70.0	70.0
39"		70.0	70.0	70.0	70.0	70.0
42"		70.0	70.0	70.0	70.0	70.0
45"		70.0	70.0	70.0	70.0	70.0
48"		67.0	70.0	70.0	70.0	70.0
51"		63.1	70.0	70.0	70.0	70.0
54"		59.6	70.0	70.0	70.0	70.0
57"		56.4	70.0	70.0	70.0	70.0
60"		53.6	70.0	70.0	70.0	70.0
63"		51.0	70.0	70.0	70.0	70.0
66"		48.7	70.0	70.0	70.0	70.0
69"		46.6	69.9	70.0	70.0	70.0
72"		44.7	67.0	70.0	68.0	70.0
30"	78"	70.0	70.0	70.0	70.0	70.0
33"		70.0	70.0	70.0	70.0	70.0
36"		70.0	70.0	70.0	70.0	70.0
39"		70.0	70.0	70.0	70.0	70.0
42"		70.0	70.0	70.0	70.0	70.0
45"		66.0	70.0	70.0	70.0	70.0
48"		61.8	70.0	70.0	70.0	70.0
51"		58.2	70.0	70.0	70.0	70.0
54"		55.0	70.0	70.0	70.0	70.0
57"		52.1	70.0	70.0	70.0	70.0
60"		49.5	70.0	70.0	70.0	70.0
63"		47.1	70.0	70.0	70.0	70.0
66"		45.0	67.5	70.0	68.5	70.0
69"		43.0	64.5	70.0	65.5	70.0
72"		41.2	61.8	70.0	62.8	70.0
30"	84"	70.0	70.0	70.0	70.0	70.0
33"		70.0	70.0	70.0	70.0	70.0
36"		70.0	70.0	70.0	70.0	70.0
39"		70.0	70.0	70.0	70.0	70.0
42"		65.6	70.0	70.0	70.0	70.0
45"		61.3	70.0	70.0	70.0	70.0
48"		57.4	70.0	70.0	70.0	70.0
51"		54.1	70.0	70.0	70.0	70.0
54"		51.0	70.0	70.0	70.0	70.0
57"		48.4	70.0	70.0	70.0	70.0
60"		45.9	68.9	70.0	69.9	70.0
63"		43.8	65.6	70.0	66.6	70.0
66"		41.8	62.6	70.0	63.6	70.0
69"		40.0	59.9	70.0	60.8	70.0
72"		38.3	57.4	70.0	58.3	70.0

ANCHOR LOAD CAPACITY – PSF
EXT.(+) & INT.(–)

NOMINAL DIMS.		ANCHORS TYPE 'C'			ANCHORS TYPE 'D'	
WIDTH (W)	FRAME HEIGHT	C2	C3	C4	D2	D3
30"	90"	70.0	70.0	70.0	70.0	70.0
33"		70.0	70.0	70.0	70.0	70.0
36"		70.0	70.0	70.0	70.0	70.0
39"		66.0	70.0	70.0	70.0	70.0
42"		61.3	70.0	70.0	70.0	70.0
45"		57.2	70.0	70.0	70.0	70.0
48"		53.6	70.0	70.0	70.0	70.0
51"		50.4	70.0	70.0	70.0	70.0
54"		47.6	70.0	70.0	70.0	70.0
57"		45.1	67.7	70.0	68.7	70.0
60"		42.9	64.3	70.0	65.3	70.0
63"		40.8	61.3	70.0	62.2	70.0
66"		39.0	58.5	70.0	59.3	70.0
69"		37.3	55.9	70.0	56.8	70.0
72"		35.7	53.6	70.0	54.4	70.0
30"	96"	70.0	70.0	70.0	70.0	70.0
33"		70.0	70.0	70.0	70.0	70.0
36"		67.0	70.0	70.0	70.0	70.0
39"		61.8	70.0	70.0	70.0	70.0
42"		57.4	70.0	70.0	70.0	70.0
45"		53.6	70.0	70.0	70.0	70.0
48"		50.3	70.0	70.0	70.0	70.0
51"		47.3	70.0	70.0	70.0	70.0
54"		44.7	67.0	70.0	68.0	70.0
57"		42.3	63.5	70.0	64.4	70.0
60"		40.2	60.3	70.0	61.2	70.0
63"		38.3	57.4	70.0	58.3	70.0
66"		36.5	54.8	70.0	55.6	70.0
69"		35.0	52.4	69.9	53.2	70.0
72"		33.5	50.3	67.0	51.0	70.0
30"	102"	70.0	70.0	70.0	70.0	70.0
33"		68.8	70.0	70.0	70.0	70.0
36"		63.1	70.0	70.0	70.0	70.0
39"		58.2	70.0	70.0	70.0	70.0
42"		54.1	70.0	70.0	70.0	70.0
45"		50.4	70.0	70.0	70.0	70.0
48"		47.3	70.0	70.0	70.0	70.0
51"		44.5	66.8	70.0	67.8	70.0
54"		42.0	63.1	70.0	64.0	70.0
57"		39.8	59.7	70.0	60.6	70.0
60"		37.8	56.8	70.0	57.6	70.0
63"		36.0	54.1	70.0	54.9	70.0
66"		34.4	51.6	68.8	52.4	70.0
69"		32.9	49.4	65.8	50.1	70.0

ANCHOR LOAD CAPACITY – PSF
EXT.(+) & INT.(–)

NOMINAL DIMS.		ANCHORS TYPE 'C'			ANCHORS TYPE 'D'	
WIDTH (W)	FRAME HEIGHT	C2	C3	C4	D2	D3
30"	108"	70.0	70.0	70.0	70.0	70.0
33"		65.0	70.0	70.0	70.0	70.0
36"		59.6	70.0	70.0	70.0	70.0
39"		55.0	70.0	70.0	70.0	70.0
42"		51.0	70.0	70.0	70.0	70.0
45"		47.6	70.0	70.0	70.0	70.0
48"		44.7	67.0	70.0	68.0	70.0
51"		42.0	63.1	70.0	64.0	70.0
54"		39.7	59.6	70.0	60.4	70.0
57"		37.6	56.4	70.0	57.3	70.0
60"		35.7	53.6	70.0	54.4	70.0
63"		34.0	51.0	68.1	51.8	70.0
66"		32.5	48.7	65.0	49.5	70.0
30"	114"	67.7	70.0	70.0	70.0	70.0
33"		61.6	70.0	70.0	70.0	70.0
36"		56.4	70.0	70.0	70.0	70.0
39"		52.1	70.0	70.0	70.0	70.0
42"		48.4	70.0	70.0	70.0	70.0
45"		45.1	67.7	70.0	68.7	70.0
48"		42.3	63.5	70.0	64.4	70.0
51"		39.8	59.7	70.0	60.6	70.0
54"		37.6	56.4	70.0	57.3	70.0
57"		35.6	53.5	70.0	54.2	70.0
60"		33.9	50.8	67.7	51.5	70.0
63"		32.2	48.4	64.5	49.1	70.0
30"	120"	64.3	70.0	70.0	70.0	70.0
33"		58.5	70.0	70.0	70.0	70.0
36"		53.6	70.0	70.0	70.0	70.0
39"		49.5	70.0	70.0	70.0	70.0
42"		45.9	68.9	70.0	69.9	70.0
45"		42.9	64.3	70.0	65.3	70.0
48"		40.2	60.3	70.0	61.2	70.0
51"		37.8	56.8	70.0	57.6	70.0
54"		35.7	53.6	70.0	54.4	70.0
57"		33.9	50.8	67.7	51.5	70.0
60"		32.2	48.2	64.3	49.0	70.0

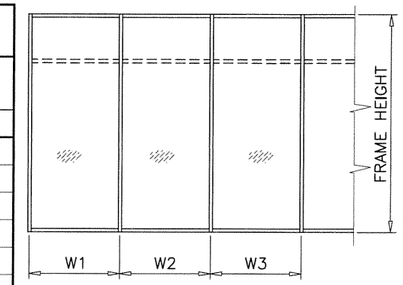

WIDTH (W) = W1 (JAMB)

WIDTH (W) = $\frac{W2 + W3}{2}$ (MULLION)

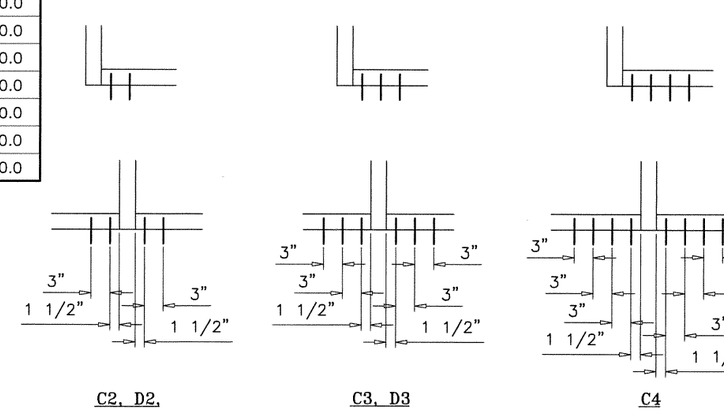

C2, D2, C3, D3 C4

ANCHORS

ANCHORS TYPES: SEE SHEET 8 FOR DESCRIPTION

C2 = (2) ANCHORS TYPE 'C' AT JAMB OR EACH SIDE OF MULLION
C3 = (3) ANCHORS TYPE 'C' AT JAMB OR EACH SIDE OF MULLION
C4 = (4) ANCHORS TYPE 'C' AT JAMB OR EACH SIDE OF MULLION

D2 = (2) ANCHORS TYPE 'D' AT JAMB OR EACH SIDE OF MULLION
D3 = (3) ANCHORS TYPE 'D' AT JAMB OR EACH SIDE OF MULLION

ALL OTHER ANCHORS TO BE SPACED AS PER ELEVATION.

STATE OF TEXAS
JAVAD ARJMAND
106516
LICENSED PROFESSIONAL ENGINEER
Date & Time: 02/17/15 12:00

AL-FAROOQ CORPORATION
ENGINEERS & PRODUCT DEVELOPMENT
1235 S.W. 87 AVE
MIAMI, FLORIDA 33174
TEL. (305) 264-8100 FAX. (305) 262-6978
STORE\W14-35YKK

YHS-50 TU ALUM STOREFRONT SYSTEM (L.M.I.)

YKK AP AMERICA INC.
1229 HIGHWAY 441 BYPASS
DUBLIN, GEORGIA 31021
TEL.(478) 277-1955 FAX(478) 277-1978

revisions:			
no	date	by	description

date: 09-30-14
scale: –
dr. by: HAMID
chk. by:

drawing no. W14-35

DOOR MULLION LOAD CAPACITY		
NOMINAL DIMS.		LOADS – PSF
WIDTH (W)	FRAME HEIGHT	EXT.(+) & INT.(–)
24"	80"	70.0
30"		70.0
36"		70.0
42"		70.0
48"		70.0
54"		70.0
60"		70.0
24"	84"	70.0
30"		70.0
36"		70.0
42"		70.0
48"		70.0
54"		70.0
60"		70.0
24"	90"	70.0
30"		70.0
36"		70.0
42"		70.0
48"		70.0
54"		70.0
60"		70.0
24"	96"	70.0
30"		70.0
36"		70.0
42"		70.0
48"		70.0
54"		70.0
60"		70.0
24"	102"	70.0
30"		70.0
36"		70.0
42"		70.0
48"		70.0
54"		70.0
60"		70.0
24"	108"	70.0
30"		70.0
36"		70.0
42"		70.0
48"		70.0
54"		70.0
60"		70.0

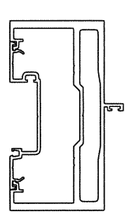

DOOR MULLION

ANCHOR TYPES	TOTAL NO. OF ANCHORS AT DOOR MULLION HEAD OR SILL
A	6
B	4
C	8
D	6

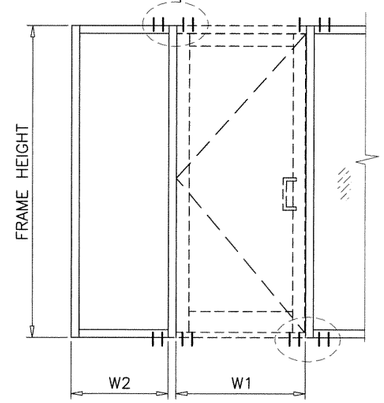

$$\text{WIDTH (W)} = \frac{W1 + W2}{2}$$

ANCHOR TYPES	TOTAL NO. OF ANCHORS AT DOOR MULLION HEAD OR SILL
A	6
B	4
C	8
D	6

YKK OUTSWING DOORS
SEE SEPARATE APPROVAL

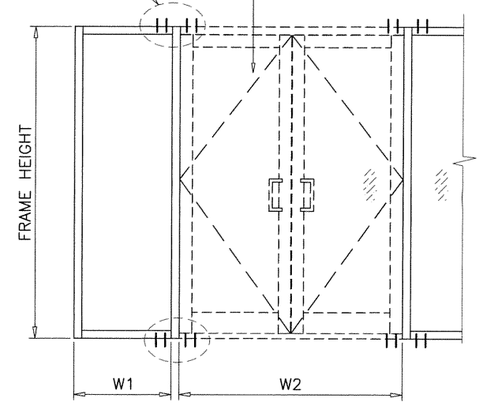

$$\text{WIDTH (W)} = \frac{W1}{2} + \frac{W2}{4}$$

ANCHOR TYPES	TOTAL NO. OF ANCHORS AT DOOR MULLION HEAD OR SILL
A	6
B	4
C	8
D	6

YKK OUTSWING DOORS
SEE SEPARATE APPROVAL

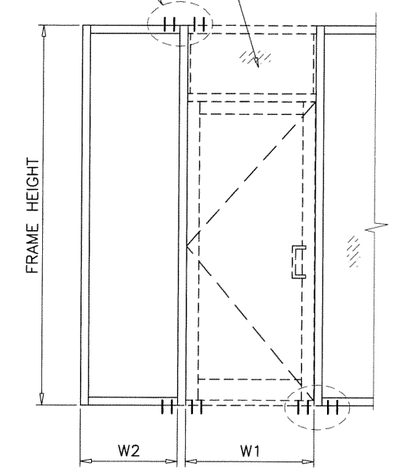

$$\text{WIDTH (W)} = \frac{W1 + W2}{2}$$

DOOR MULLION

STATE OF TEXAS
JAVAD [illegible]
106516
LICENSED
PROFESSIONAL ENGINEER

Date & Time: 02/17/15

AL-FAROOQ CORPORATION
ENGINEERS & PRODUCT DEVELOPMENT
1235 S.W. 87 AVE
MIAMI, FLORIDA 33174
TEL. (305) 264-8100 FAX. (305) 262-6978

STORE\W14-35YKK

YHS-50 TU ALUM STOREFRONT SYSTEM (L.M.I.)

YKK AP AMERICA INC.
1229 HIGHWAY 441 BYPASS
DUBLIN, GEORGIA 31021
TEL.(478) 277-1955 FAX(478) 277-1978

revisions:			
no	date	by	description

date: 09-30-14
scale: –
dr. by: HAMID
chk. by:

drawing no.
W14-35

DOOR MULLION LOAD CAPACITY – PSF				
NOMINAL DIMS.				LOADS – PSF
FRAME HEIGHT INCHES	DOOR HEIGHT INCHES	WIDTH (W1) INCHES	WIDTH (W2) INCHES	EXT. (+) INT. (–)
96	84	72	30	70.0
			36	70.0
			42	70.0
			48	70.0
			54	70.0
			60	70.0
		84	30	70.0
			36	70.0
			42	70.0
			48	70.0
			54	70.0
			60	70.0
		96	30	70.0
			36	70.0
			42	70.0
			48	70.0
			54	70.0
			60	70.0
102	84	72	30	70.0
			36	70.0
			42	70.0
			48	70.0
			54	70.0
			60	70.0
		84	30	70.0
			36	70.0
			42	70.0
			48	70.0
			54	70.0
			60	70.0
		96	30	70.0
			36	70.0
			42	70.0
			48	70.0
108	84	72	30	70.0
			36	70.0
			42	70.0
			48	70.0
			54	70.0
			60	70.0
		84	30	70.0
			36	70.0
			42	70.0
			48	70.0
			54	70.0
		96	30	70.0
			36	70.0
			42	70.0

DOOR MULLION LOAD CAPACITY – PSF				
NOMINAL DIMS.				LOADS – PSF
FRAME HEIGHT INCHES	DOOR HEIGHT INCHES	WIDTH (W1) INCHES	WIDTH (W2) INCHES	EXT. (+) INT. (–)
102	90	72	30	70.0
			36	70.0
			42	70.0
			48	70.0
			54	70.0
			60	70.0
		84	30	70.0
			36	70.0
			42	70.0
			48	70.0
			54	70.0
			60	70.0
		96	30	70.0
			36	70.0
			42	70.0
			48	70.0
108	90	72	30	70.0
			36	70.0
			42	70.0
			48	70.0
			54	70.0
			60	70.0
		84	30	70.0
			36	70.0
			42	70.0
			48	70.0
			54	70.0
		96	30	70.0
			36	70.0
			42	70.0

DOOR MULLION LOAD CAPACITY – PSF				
NOMINAL DIMS.				LOADS – PSF
FRAME HEIGHT INCHES	DOOR HEIGHT INCHES	WIDTH (W1) INCHES	WIDTH (W2) INCHES	EXT. (+) INT. (–)
108	96	72	30	70.0
			36	70.0
			42	70.0
			48	70.0
			54	70.0
			60	70.0
		84	30	70.0
			36	70.0
			42	70.0
			48	70.0
			54	70.0
		96	30	70.0
			36	70.0
			42	70.0

ANCHOR TYPES	TOTAL NO. OF ANCHORS AT DOOR MULLION HEAD OR SILL
A	6
B	4
C	10
D	6

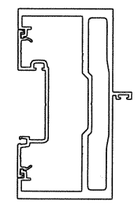

DOOR MULLION

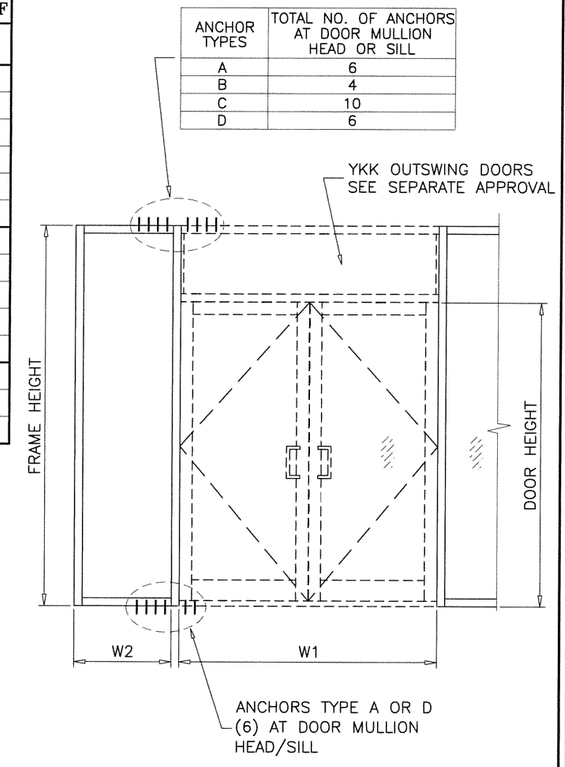

DOOR MULLION

STATE OF TEXAS
JAVAD AHMAD
106516
LICENSED
PROFESSIONAL ENGINEER
Date & Time: 02/17/15 [illegible]

AL-FAROOQ CORPORATION
ENGINEERS & PRODUCT DEVELOPMENT
1235 S.W. 87 AVE
MIAMI, FLORIDA 33174
TEL. (305) 264-8100 FAX. (305) 262-6978

STORE\W14-35YKK

YHS-50 TU ALUM STOREFRONT SYSTEM (L.M.I.)

YKK AP AMERICA INC.
1229 HIGHWAY 441 BYPASS
DUBLIN, GEORGIA 31021
TEL.(478) 277-1955 FAX(478) 277-1978

revisions:			
no	date	by	description

date: 09-30-14
scale: –
dr. by: HAMID
chk. by:

drawing no.
W14-35

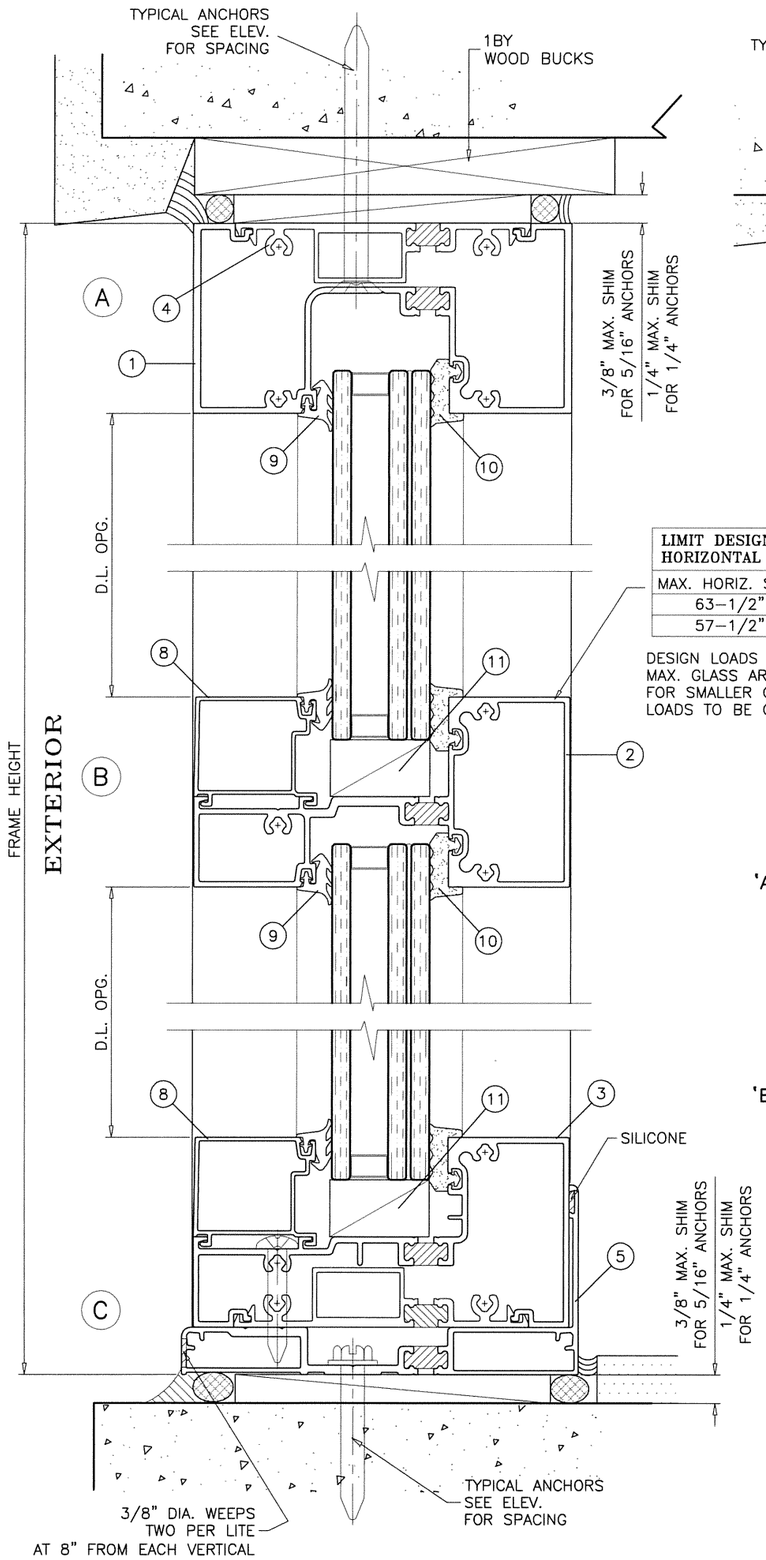

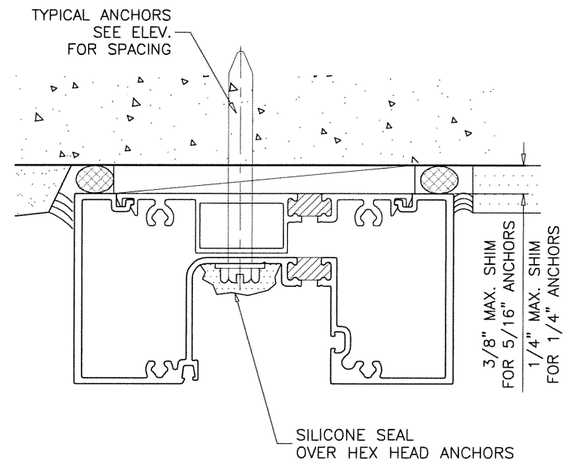

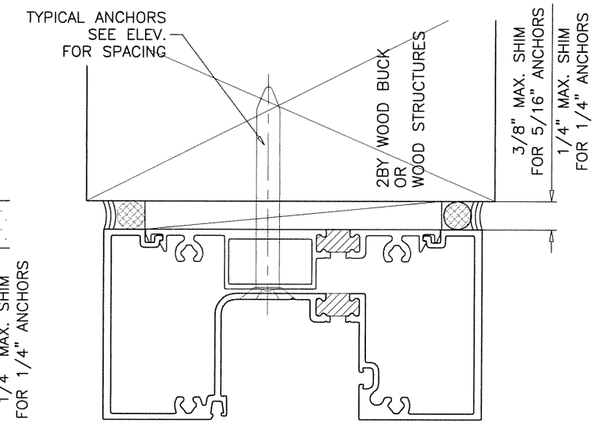

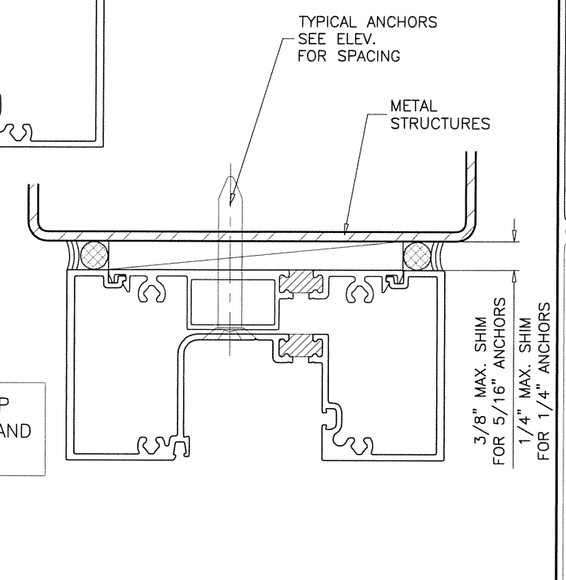

LIMIT DESIGN LOADS FOR HORIZONTAL AS FOLLOWS

MAX. HORIZ. SPAN	MAX. DESIGN LOADS
63–1/2"	55 PSF
57–1/2"	70 PSF

DESIGN LOADS SHOWN ABOVE ARE BASED ON MAX. GLASS AREA ABOVE HORIZONTAL. FOR SMALLER GLASS ABOVE HORIZONTAL DESIGN LOADS TO BE CALCULATED SEPARATELY.

WOOD BUCKS AND METAL STRUCTURES NOT BY YKK AP MUST SUPPORT LOADS IMPOSED BY GLAZING SYSTEM AND TRANSFER THEM TO THE BUILDING STRUCTURE.

TYPICAL ANCHORS: SEE ELEV. FOR SPACING

'A'– 5/16" DIA. ULTRACON BY 'ELCO' (Fu=177 KSI, Fy=155 KSI)

INTO 2BY WOOD BUCKS OR WOOD STRUCTURES
1–1/2" MIN. PENETRATION INTO WOOD (HEAD/SILL)

THRU 1BY BUCKS INTO CONCRETE
1–1/4" MIN. EMBED INTO CONCRETE (HEAD/SILL)

DIRECTLY INTO CONCRETE
1–1/4" MIN. EMBED INTO CONCRETE (HEAD/SILL)

'B'– 5/16" DIA. TEKS/DRIL–FLEX SELF DRILLING SCREWS (GRADE 5 CRS)

INTO METAL STRUCTURES

STEEL : 12 GA. MIN. (Fy = 36 KSI MIN.)
ALUMINUM : 1/8" THK. MIN. (6063–T5 MIN.)
(STEEL IN CONTACT WITH ALUMINUM TO BE PLATED OR PAINTED)

TYPICAL EDGE DISTANCE

INTO CONCRETE = 3" MIN.
INTO WOOD STRUCTURE = 1" MIN.
INTO METAL STRUCTURE = 3/4" MIN.

'C'– 1/4" DIA. TAPCON (STL. OR 410 ST. STL.)BY 'ITW' (Fu=125 KSI, Fy=100 KSI)
1/4" DIA. ULTRACON BY 'ELCO' (Fu=177 KSI, Fy=155 KSI)
1/4" DIA. ULTRACON SS4 BY 'ELCO' (Fu=190 KSI, Fy=164 KSI)

INTO 2BY WOOD BUCKS OR WOOD STRUCTURES
1–1/2" MIN. PENETRATION INTO WOOD (HEAD/SILL)

THRU 1BY BUCKS INTO CONCRETE
1–1/4" MIN. EMBED INTO CONCRETE (HEAD/SILL)

DIRECTLY INTO CONCRETE
1–1/4" MIN. EMBED INTO CONCRETE (HEAD/SILL)

'D'– 1/4" DIA. TEKS/DRIL–FLEX SELF DRILLING SCREWS (GRADE 5 CRS)
1/4" DIA. BI–FLEX ST. STL. SELF DRILLING SCREWS

INTO METAL STRUCTURES

STEEL : 12 GA. MIN. (Fy = 36 KSI MIN.)
ALUMINUM : 1/8" THK. MIN. (6063–T5 MIN.)
(STEEL IN CONTACT WITH ALUMINUM TO BE PLATED OR PAINTED)

TYPICAL EDGE DISTANCE

INTO CONCRETE = 2–1/2" MIN. (ULTRACONS)
INTO CONCRETE = 4" MIN. (TAPCONS)
INTO WOOD STRUCTURE = 1" MIN.
INTO METAL STRUCTURE = 3/4" MIN.

WOOD AT HEAD OR SILL SG = 0.55 MIN.
CONCRETE AT HEAD OR SILL f'c = 3000 PSI MIN.

STATE OF TEXAS
JAVAD [illegible]
106516
LICENSED PROFESSIONAL ENGINEER
Date & Time: 02/17/15 [illegible]

AL-FAROOQ CORPORATION
ENGINEERS & PRODUCT DEVELOPMENT
1235 S.W. 87 AVE
MIAMI, FLORIDA 33174
TEL. (305) 264-8100 FAX. (305) 262-6978
STORE\W14–35YKK

YHS–50 TU ALUM STOREFRONT SYSTEM (L.M.I.)

YKK AP AMERICA INC.
1229 HIGHWAY 441 BYPASS
DUBLIN, GEORGIA 31021
TEL.(478) 277–1955 FAX(478) 277–1978

revisions:			
no	date	by	description

date: 09–30–14
scale: 1/2" = 1"
dr. by: HAMID
chk. by:

drawing no. W14–35

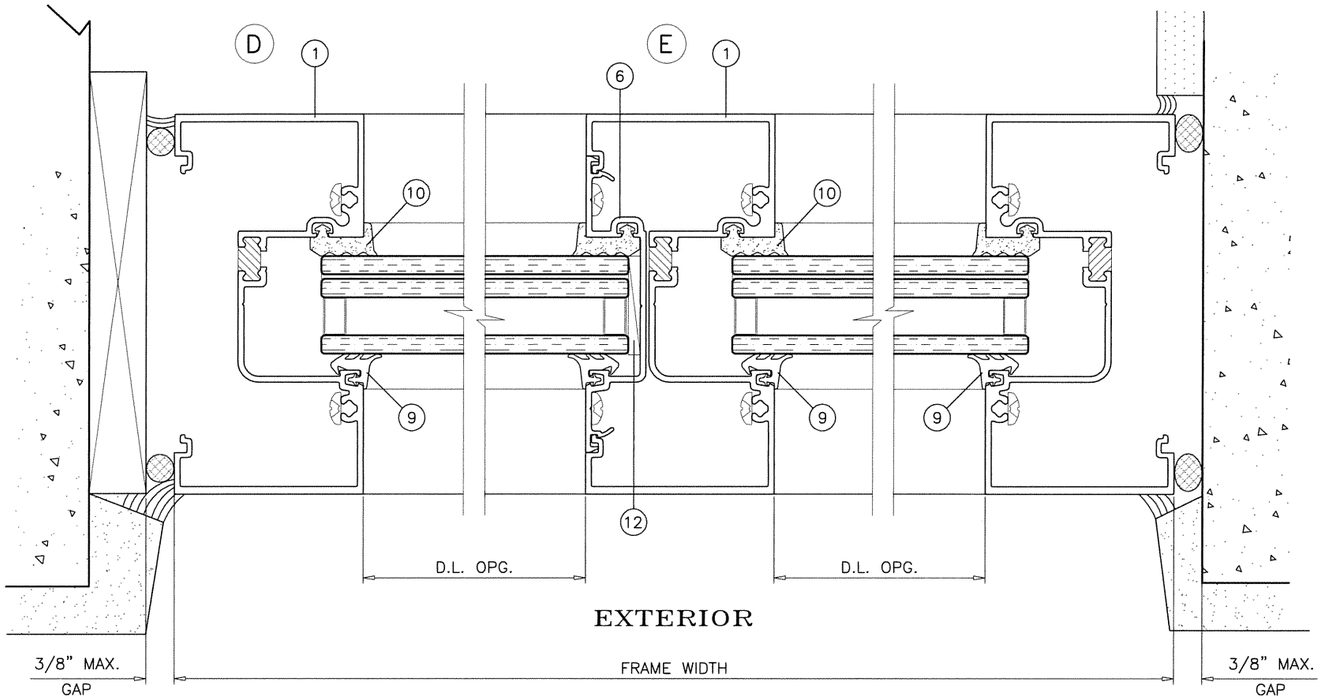

STD. CONFIGURATION

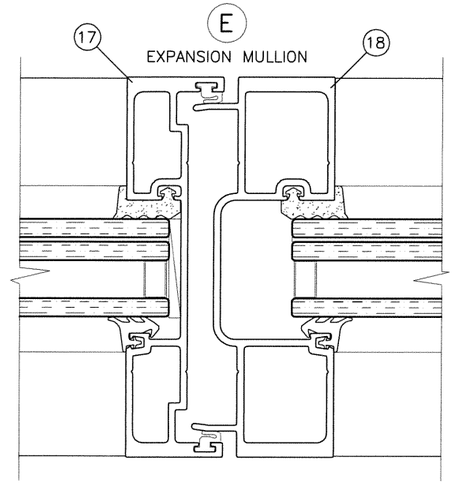

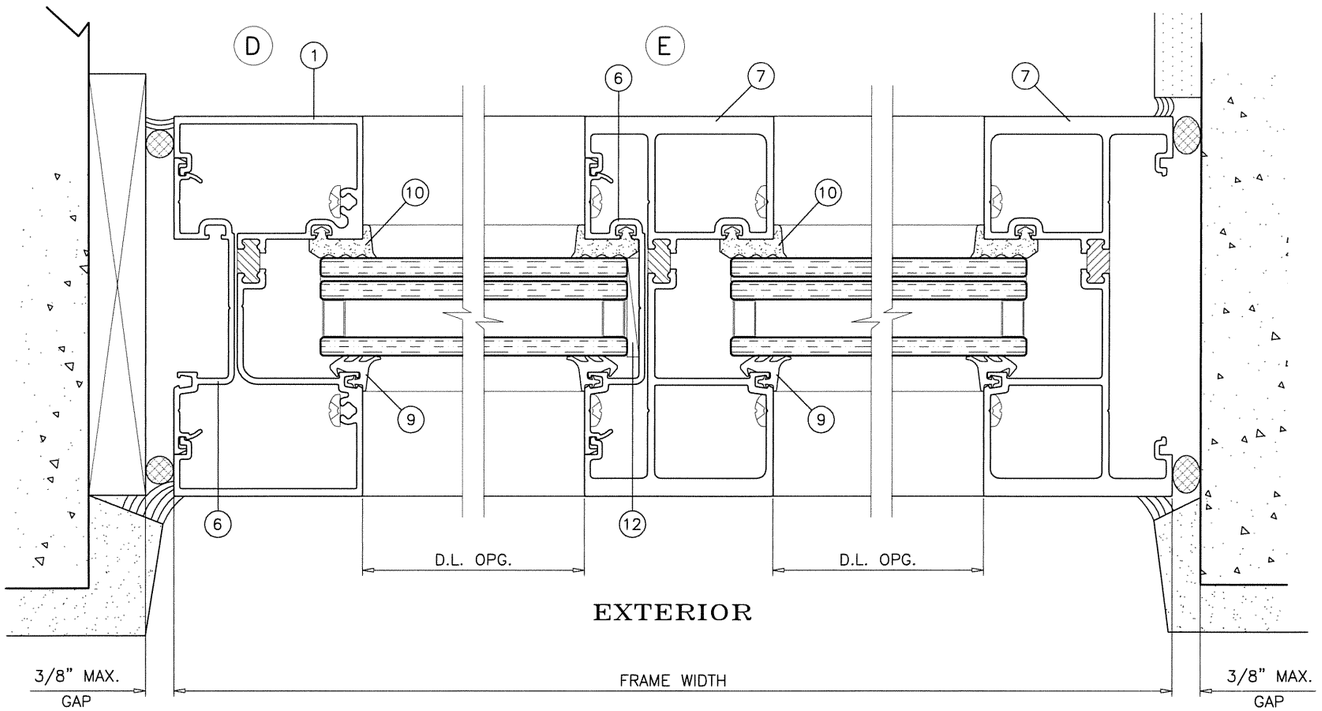

HEAVY CONFIGURATION

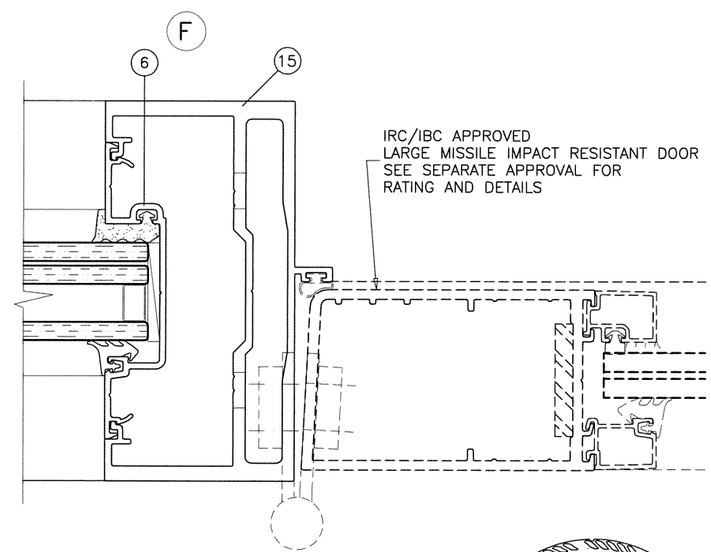

STATE OF TEXAS
JAVAD AHMAD
106516
LICENSED
PROFESSIONAL ENGINEER
Date & Time: 02/17/15

AL-FAROOQ CORPORATION
ENGINEERS & PRODUCT DEVELOPMENT
1235 S.W. 87 AVE
MIAMI, FLORIDA 33174
TEL. (305) 264-8100 FAX. (305) 262-6978

STORE\W14-35YKK

YHS-50 TU ALUM STOREFRONT SYSTEM (L.M.I.)

YKK AP AMERICA INC.
1229 HIGHWAY 441 BYPASS
DUBLIN, GEORGIA 31021
TEL.(478) 277-1955 FAX(478) 277-1978

revisions:			
no	date	by	description

date: 09-30-14
scale: 1/2" = 1"
dr. by: HAMID
chk. by:

drawing no.
W14-35

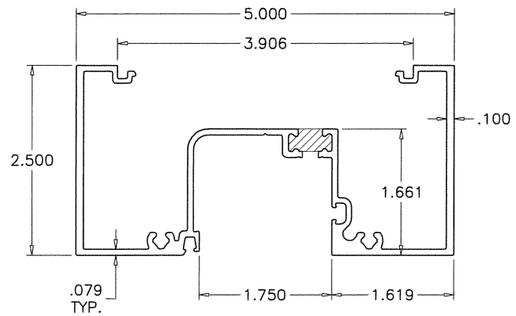

1 FRAME HEAD/SILL/JAMB

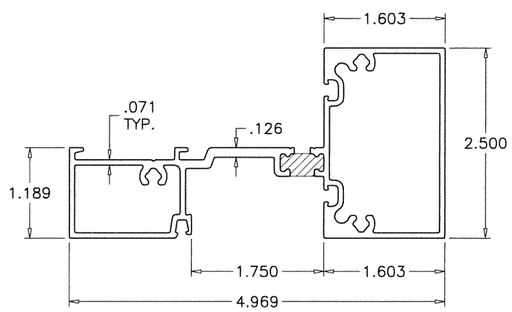

2 FRAME HORIZONTAL

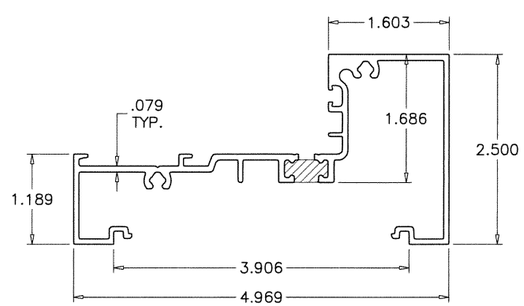

3 FRAME SILL

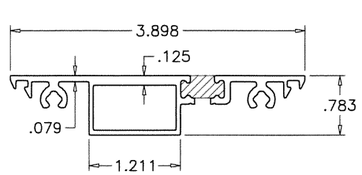

4 FLAT FILLER

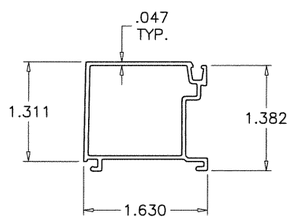

8 GLAZING STOP

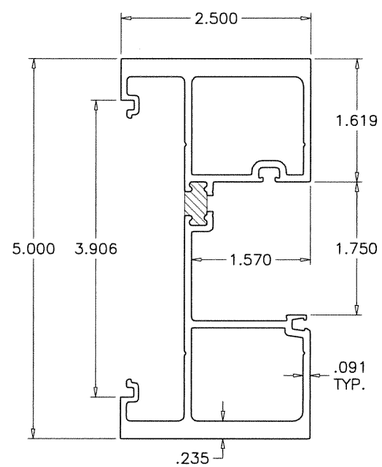

7 HEAVY DUTY MULLION

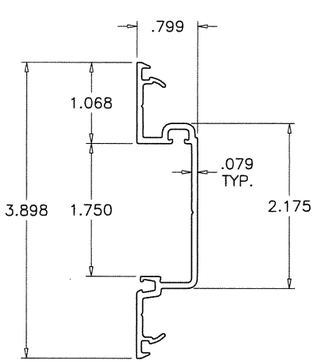

6 SHALLOW POCKET FILLER

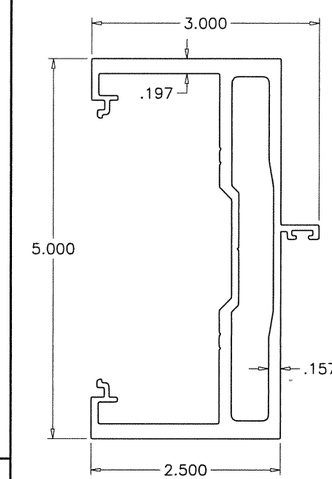

15 DOOR MULLION

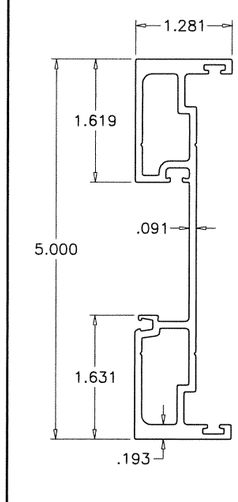

17 FEMALE MULLION

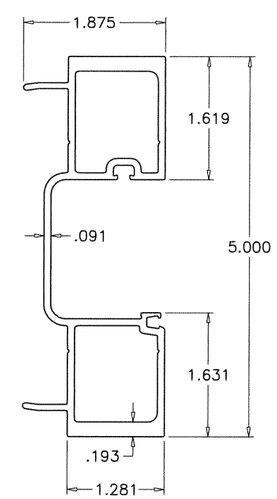

18 MALE MULLION

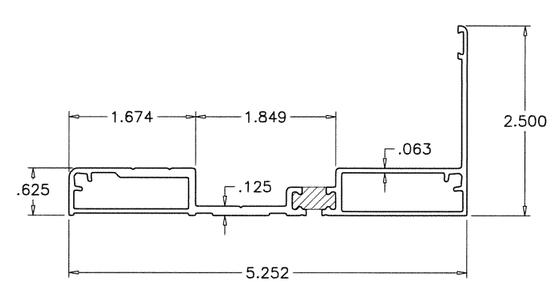

5 SILL FLASHING

ITEM NO.	PART NUMBER	QUANTITY	DESCRIPTION	MATERIAL	MANF./SUPPLIER/REMARKS
1	BE9–0681	AS NEEDED	FRAME HEAD/SILL/JAMB	6063–T5	–
2	BE9–0683	AS NEEDED	FRAME HORIZONTAL	6063–T5	–
3	BE9–0682	AS NEEDED	FRAME SILL	6063–T5	–
4	E1–1060	AS NEEDED	FLAT FILLER	6063–T5	–
5	BE9–0687	AS NEEDED	SILL FLASHING	6063–T5	–
6	BE9–0655	AS NEEDED	SHALLOW POCKET FILLER	6063–T5	–
7	BE9–0684	AS NEEDED	HEAVY DUTY MULLION	6063–T5	–
8	E9–0658	AS NEEDED	GLAZING STOP	EPDM	–
9	E2–0083	AS NEEDED	EXTERIOR GLAZING GASKET	EPDM	–
10	E2–0088	AS NEEDED	INTERIOR GLAZING GASKET	EPDM SPONGE	–
11	E2–0095	AS NEEDED	SETTING BLOCK	EPDM	–
12	E2–0096	AS NEEDED	SIDE BLOCK	EPDM	–
13	PC–1220	AS NEEDED	ASSEMBLY SCREWS PHSMS	CRS	#12 X 1–1/4" PPH SMS
14	PC–1424	AS NEEDED	FOR SILL	CRS	#14 X 1–1/2" PPH SMS
15	E9–0504	AS NEEDED	DOOR MULLION	6063–T5	–
16	E2–0084	AS NEEDED	INTERIOR SILICONE SPACER	EPDM	–
17	BE9–0688	AS NEEDED	FEMALE MULLION	6063–T5	–
18	BE9–0689	AS NEEDED	MALE MULLION	6063–T5	–

SEALANTS:

ALL FRAME CORNERS JOINTS AND INSTALLATION SCREWS AT SILL SEALED WITH SILICONE.

STATE OF TEXAS
JAVAD FARHAD
106516
LICENSED PROFESSIONAL ENGINEER
Date & Time: 02/17/16 2:25

AL-FAROOQ CORPORATION
ENGINEERS & PRODUCT DEVELOPMENT
1235 S.W. 87 AVE
MIAMI, FLORIDA 33174
TEL. (305) 264-8100 FAX. (305) 262-6978
STORE\W14-35YKK

YHS-50 TU ALUM STOREFRONT SYSTEM (L.M.I.)

YKK AP AMERICA INC.
1229 HIGHWAY 441 BYPASS
DUBLIN, GEORGIA 31021
TEL.(478) 277-1955 FAX(478) 277-1978

revisions:

no	date	by	description

date: 09-30-14
scale: 1/2" = 1"
dr. by: HAMID
chk. by:

drawing no. W14-35

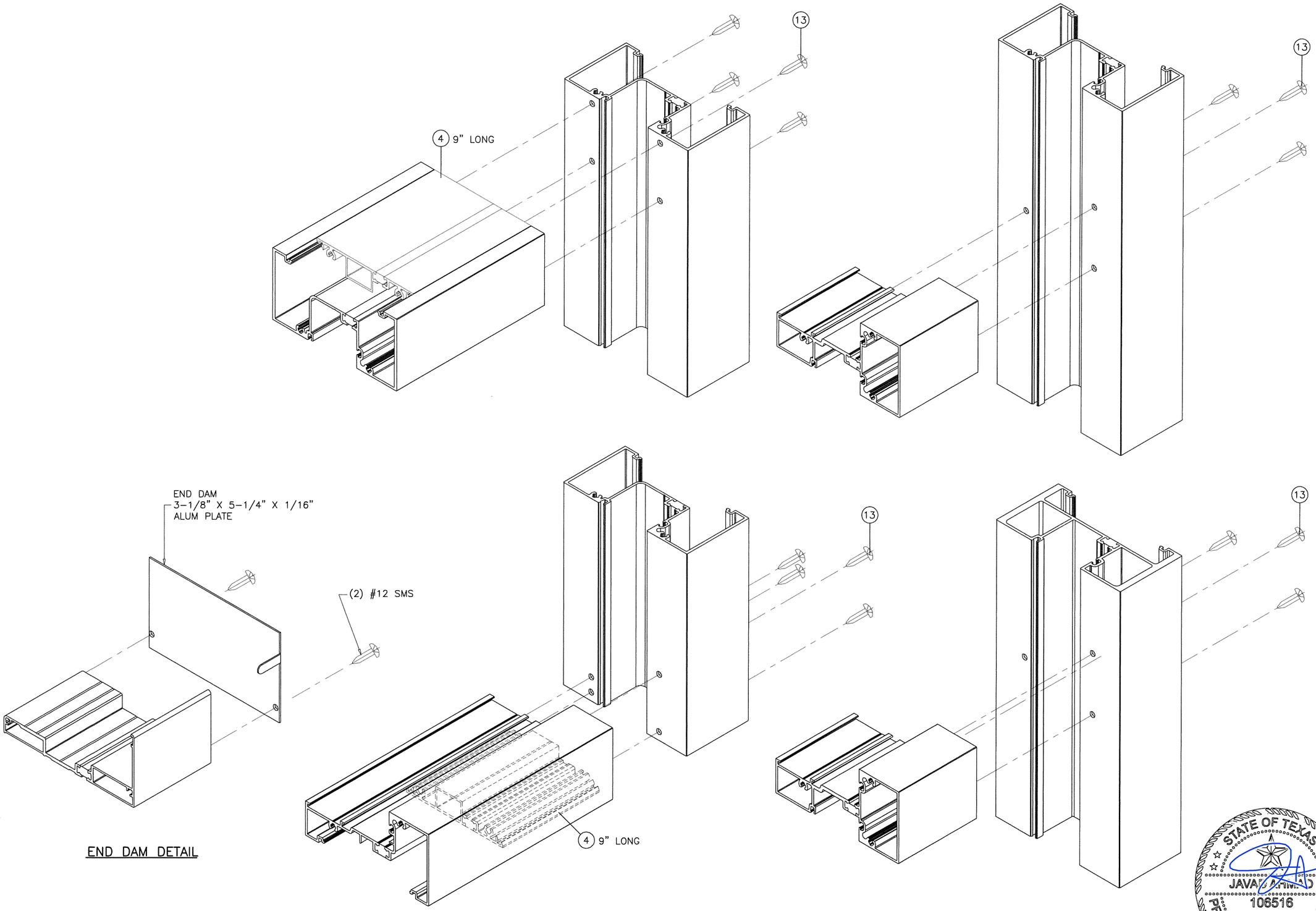

END DAM DETAIL

FRAME CORNERS

STATE OF TEXAS
JAVAD AHMAD
106516
LICENSED
PROFESSIONAL ENGINEER
Date & Time: 02/17/15 12:55

AL-FAROOQ CORPORATION
ENGINEERS & PRODUCT DEVELOPMENT
1235 S.W. 87 AVE
MIAMI, FLORIDA 33174
TEL. (305) 264-8100 FAX. (305) 262-6978

STORE\W14-35YKK

YHS-50 TU ALUM STOREFRONT SYSTEM (L.M.I.)

YKK AP AMERICA INC.
1229 HIGHWAY 441 BYPASS
DUBLIN, GEORGIA 31021
TEL.(478) 277-1955 FAX(478) 277-1978

revisions:

no	date	by	description

date: 09-30-14
scale: 3/8" = 1"
dr. by: HAMID
chk. by:

drawing no.
W14-35

sheet 11 of 11