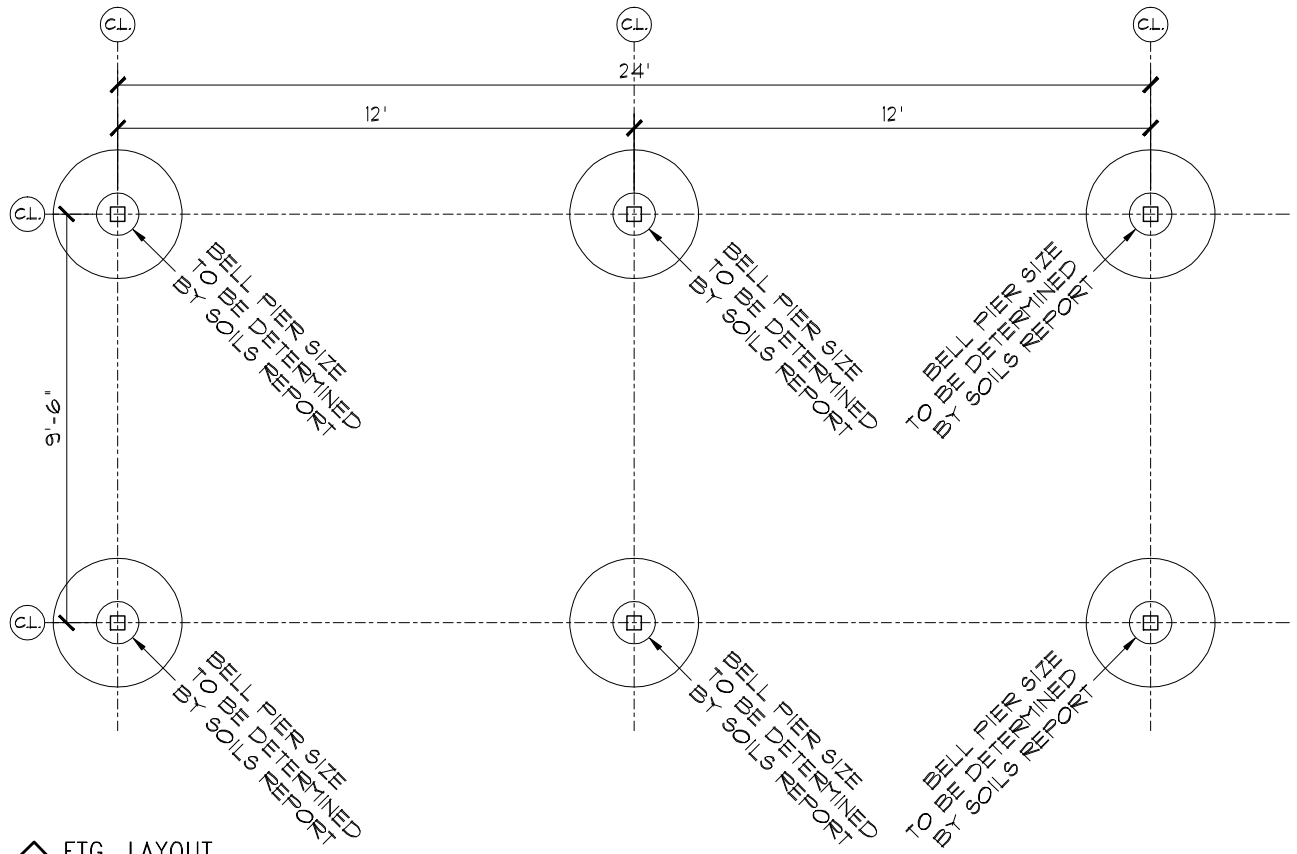

1 FTG. LAYOUT
1/2"=1'-0"

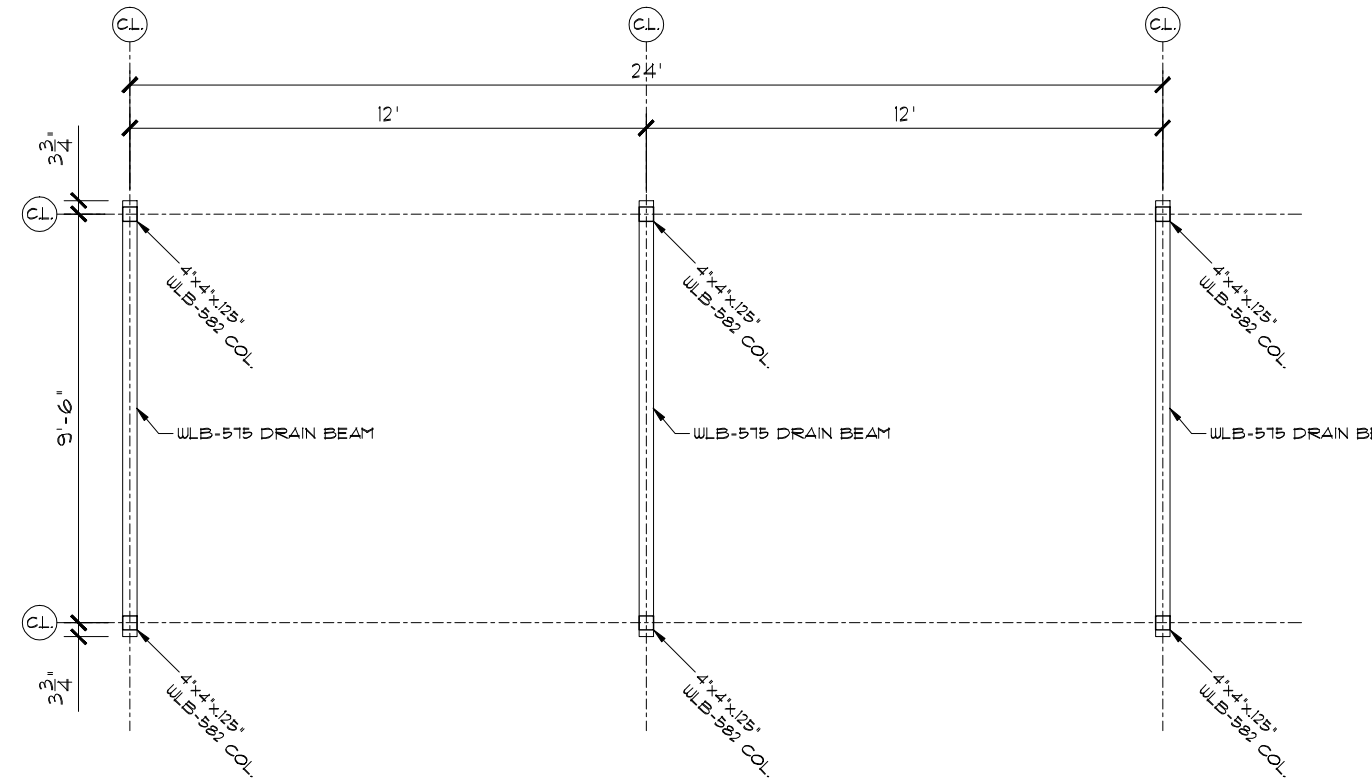

2 COL. LAYOUT
1/2"=1'-0"

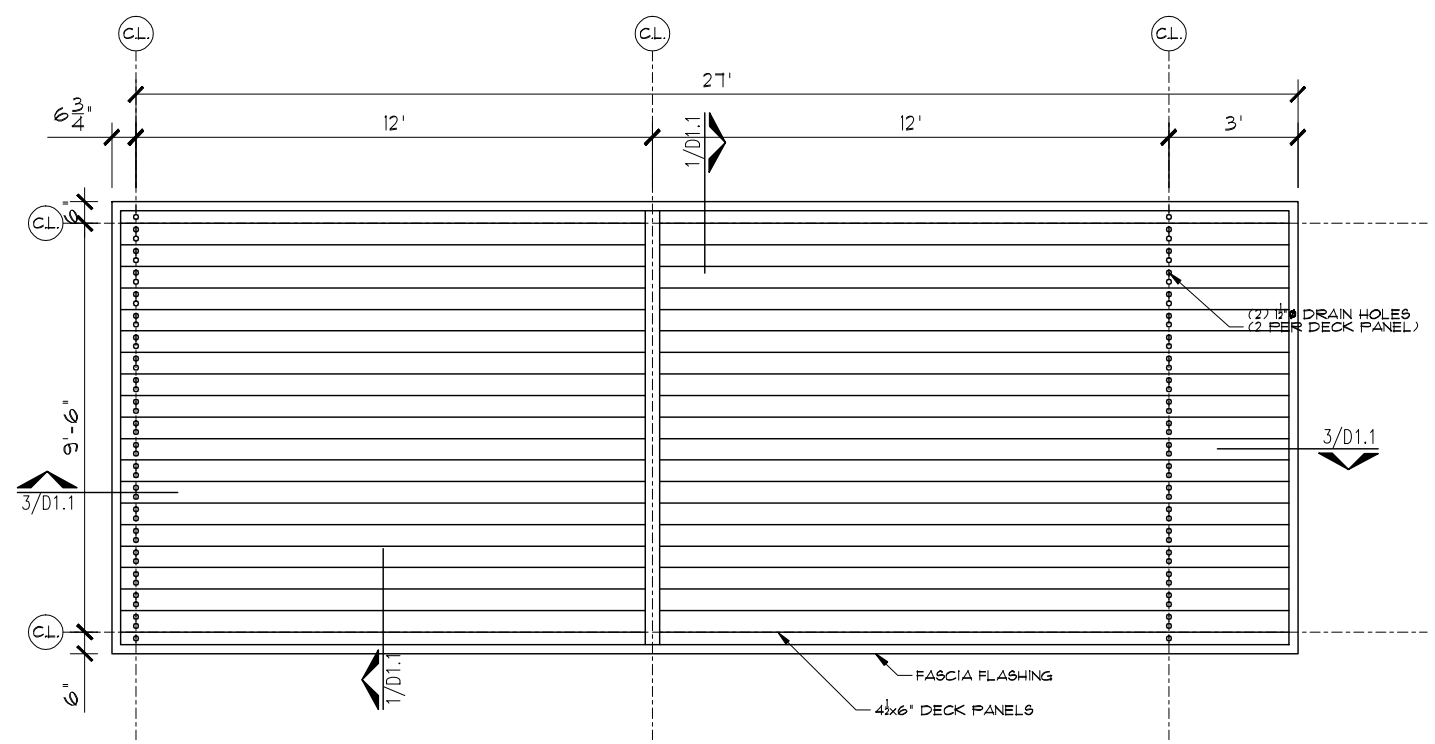

3 ROOF PANEL
1/2"=1'-0"

REV	BY	DATE	DESCRIPTION
A	TW	07/23/13	ISSUE FOR PERMIT

DRAWN BY: AF
DATE DRAWN: 03/22/13
CHECKED BY: TW
DATE CHECKED: 03/25/13
APPROVED BY: TW
DATE APPROVED:
SCALE: A.N.

Force Engineering & Testing Inc.
19530 RAMBLEWOOD DRIVE HUMBLE, TX. 77338
(281) 540-6603 Fax: (281) 540-5966
TEXAS REGISTRATION NO: F-4611

STATE OF TEXAS
TERRENCE E. WOLFE
82327
LICENSED
PROFESSIONAL ENGINEER
07/26/13
REG.# F-4611

PROJECT: JONES ALUMINUM CANOPY
LOCATION: BEAUMONT, TX
CONTRACTOR: JONES ALUMINUM
ARCHITECT:

JOB NO: 374-0176-13

DRAWING NO: S1.1

REV NO: A

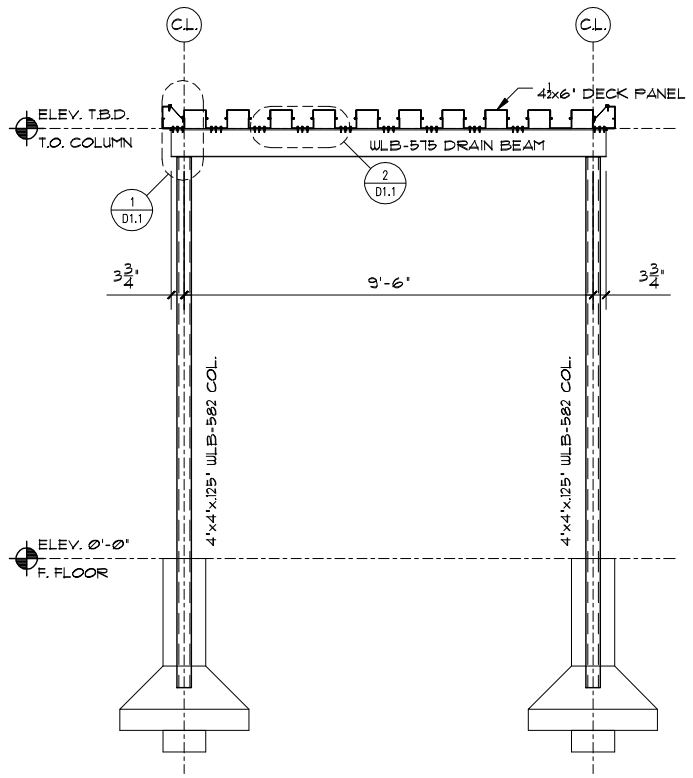

1 FRAMING ELEVATION
1/2"=1'-0"

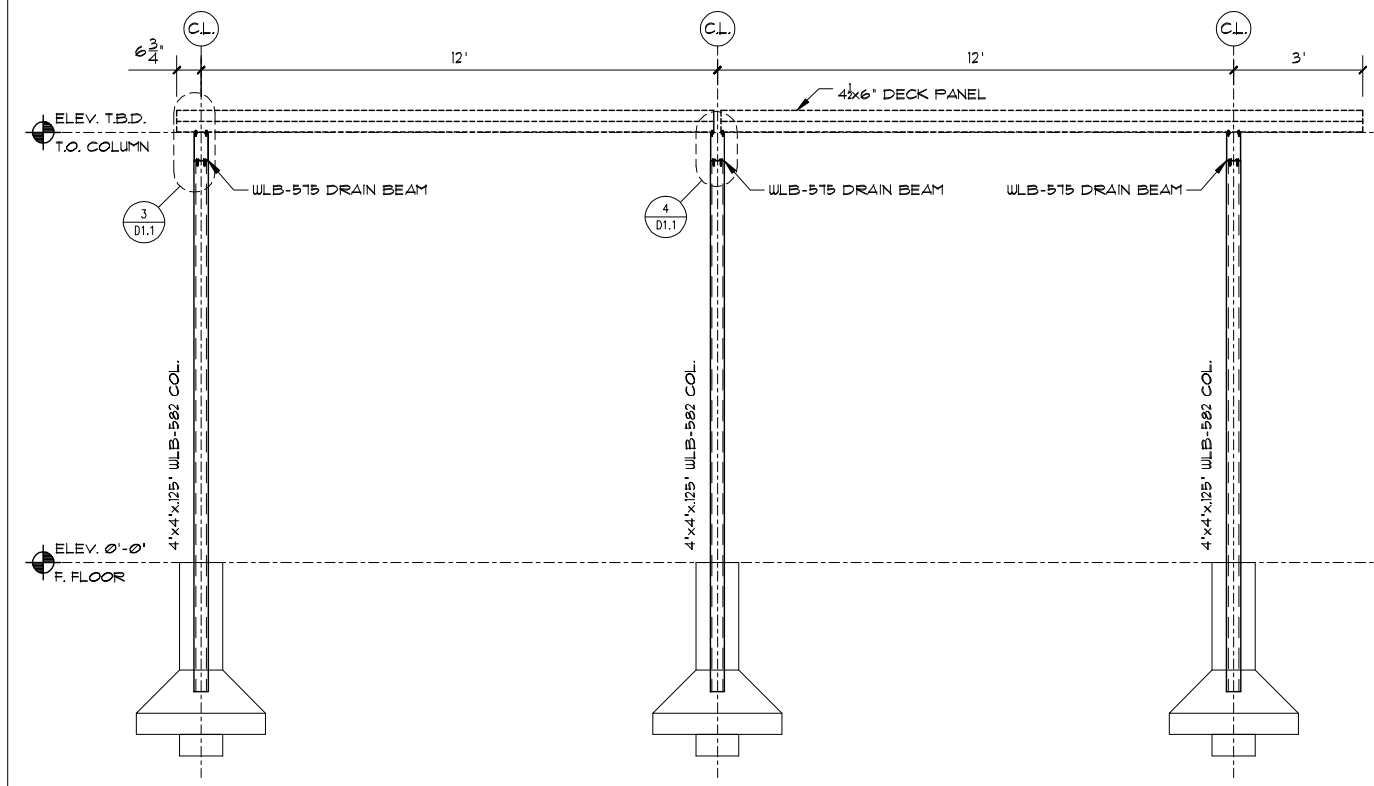

2 FRAMING ELEVATION
1/2"=1'-0"

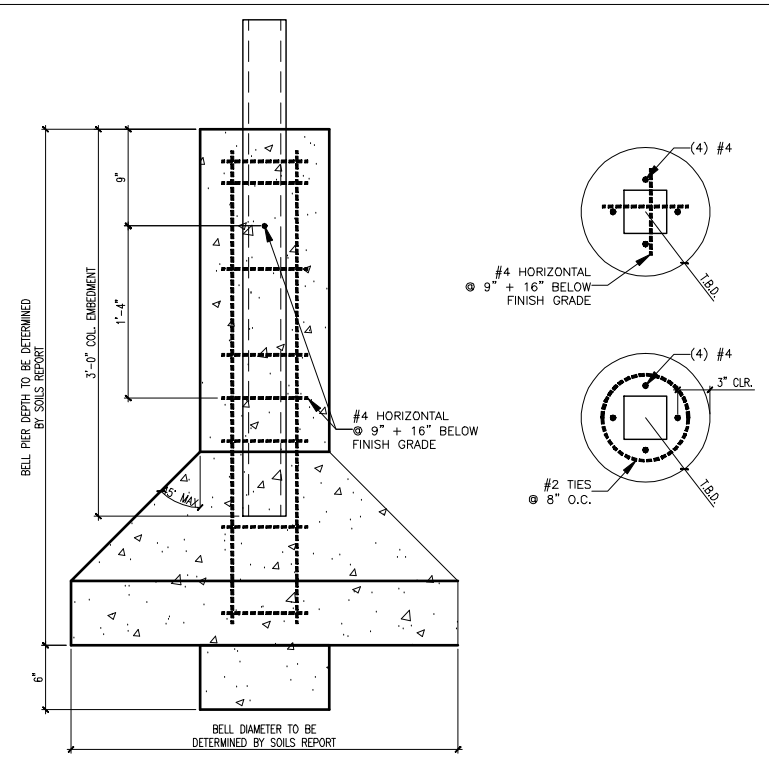

FOR ILLUSTRATION ONLY:
MUST BE DESIGNED BY A PROFFESIONAL ENGINEER

3 CANOPY SUPPORT
1/2"=1'-0"

REV	BY	DATE	DESCRIPTION
A	TW	07/23/13	ISSUE FOR PERMIT

DRAWN BY: AF — DATE DRAWN: 03/22/13
CHECKED BY: TW — DATE CHECKED: 03/25/13
APPROVED BY: TW — DATE APPROVED:
SCALE: A.N.

Force Engineering & Testing Inc.
19530 RAMBLEWOOD DRIVE, HUMBLE, Tx. 77338
(281) 540-6603 Fax: (281) 540-9966
TEXAS REGISTRATION NO: F-4611

STATE OF TEXAS
TERRENCE E. WOLFE
82327
LICENSED
PROFESSIONAL ENGINEER
07/26/13
REG.# F-4611

PROJECT: JONES ALUMINUM CANOPY
LOCATION: BEAUMONT, TX
CONTRACTOR: JONES ALUMINUM
ARCHITECT:

JOB NO: 374-0176-13

DRAWING NO: S1.2

REV NO: A

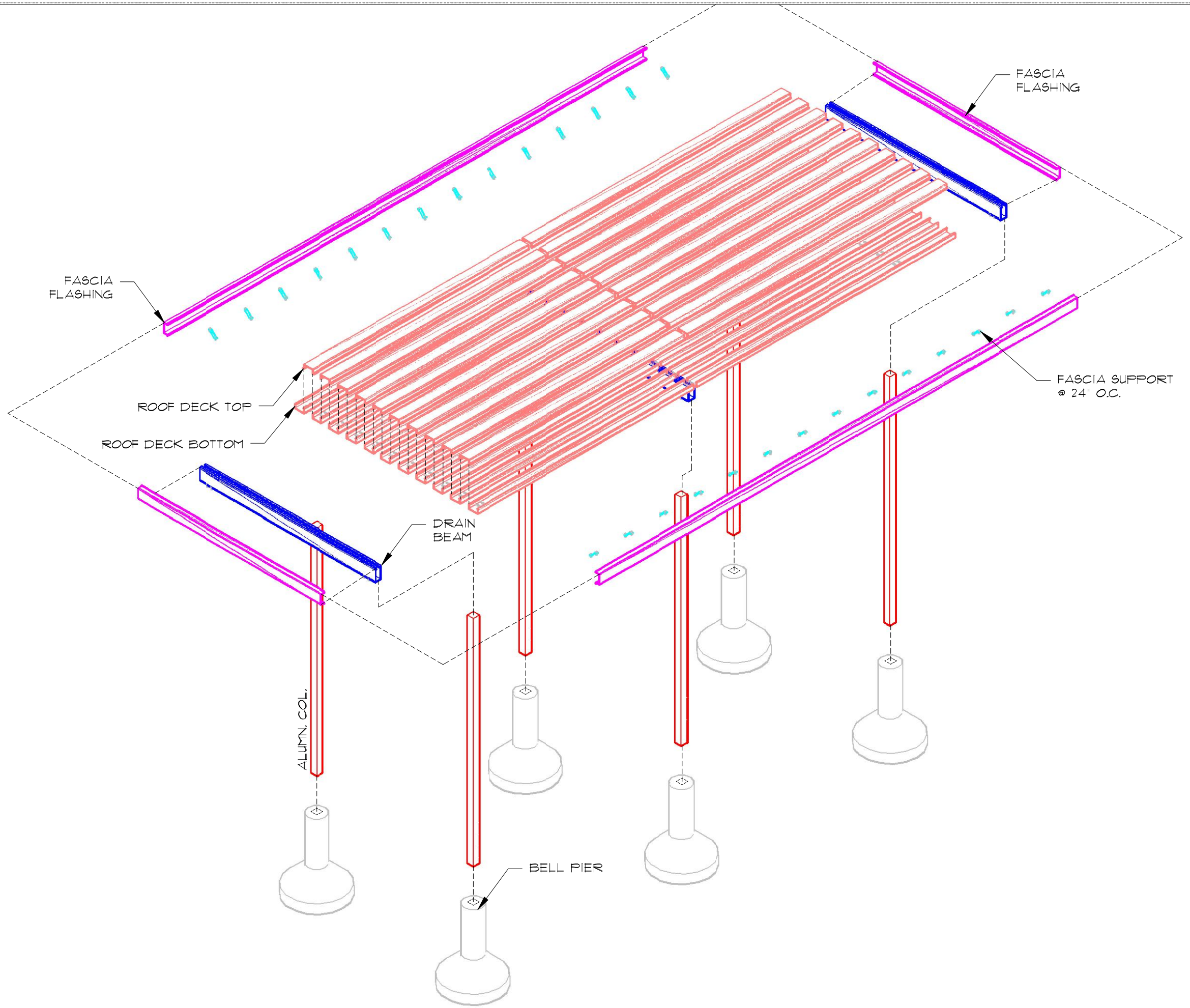

DESCRIPTION	DATE	BY	REV
ISSUE FOR PERMIT	07/23/13	TW	A

DRAWN BY: AF
DATE DRAWN: 03/22/13
CHECKED BY: TW
DATE CHECKED: 03/25/13
APPROVED BY: TW
DATE APPROVED:
SCALE: A.N.

Force Engineering & Testing Inc.
19530 RAMBLEWOOD DRIVE HUMBLE, TX 77338
(281) 540-6603 Fax: (281) 540-3966
TEXAS REGISTRATION NO: F-4611

STATE OF TEXAS
TERRENCE E. WOLFE
82327
LICENSED
PROFESSIONAL ENGINEER

07/26/13
REG.# F-4611

PROJECT: JONES ALUMINUM CANOPY
LOCATION: BEAUMONT, TX
CONTRACTOR: JONES ALUMINUM
ARCHITECT:

JOB NO: 374-0176-13

DRAWING NO: S1.3

REV NO: A

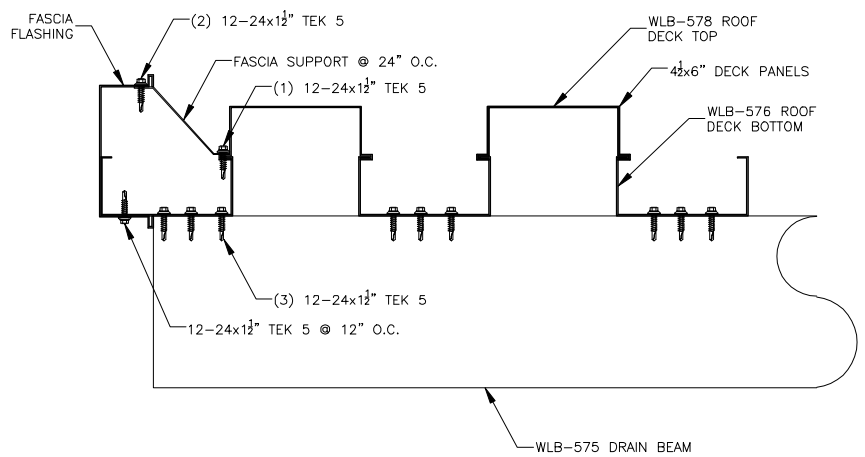

1 RAKE DETAIL

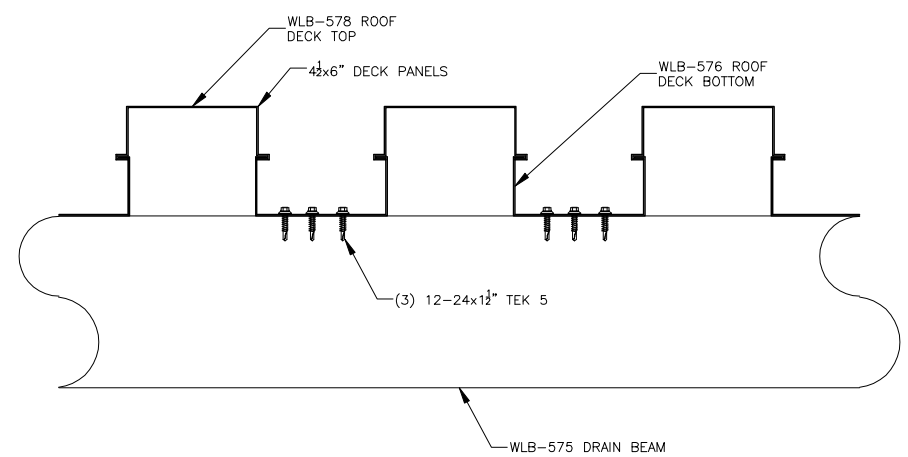

2 DECK PANEL CONN.

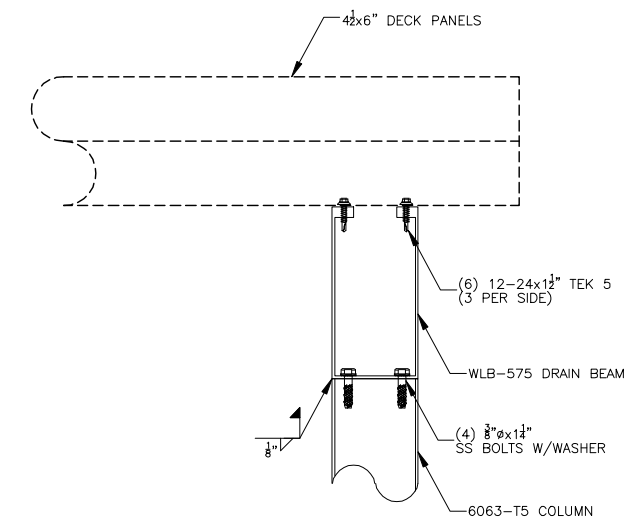

3 EAVE

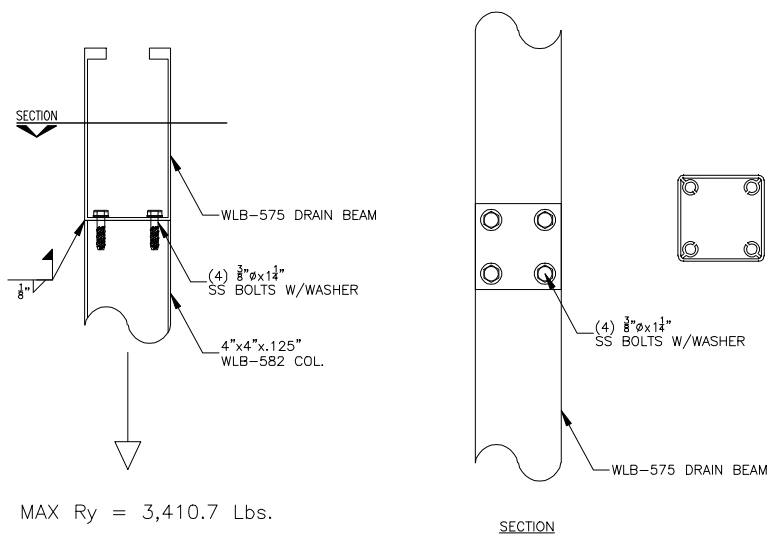

MAX Ry = 3,410.7 Lbs.

4 WLB-575 DRAIN BEAM CONN.

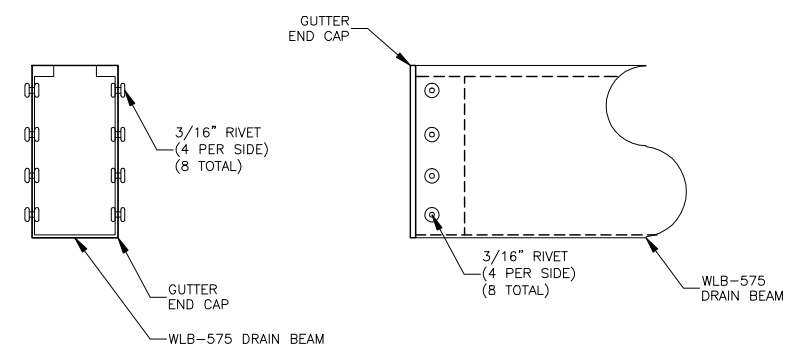

5 END CAP CONN.

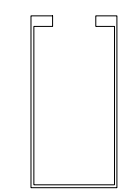

WLB-575 4"x6"
Neg. Mz Allowable = 8,792.5 FT-LBS
Neg. Mz Allowable = 105.5 K-IN
Pos. Mz Allowable = 4,931 FT-LBS
Pos. Mz Allowable = 59.2 K-IN
WT = 3.12 PLF

6 WLB-575 4"x6"

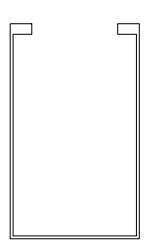

WLB-553 6"x10"
Neg. Mz Allowable = 17,364 FT-LBS
Neg. Mz Allowable = 208.4 K-IN
Pos. Mz Allowable = 125.06 K-IN
Pos. Mz Allowable = 10,505 FT-LBS
△= 1.437" @ 18 FT. SPAN
WT = 7.35 PLF

7 WLB-553 6"x10"

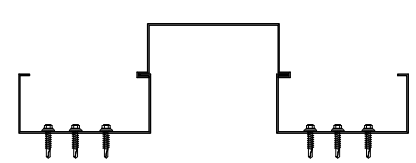

ASTM E 1592
DECK UPLIFT CAPACITY

12 FT. – 67.55 PSF

10 FT. – 103.95 PSF

8 FT. – 150.75 PSF

8 WLB-578 / WLB-576 DECK

DRAWN BY: AF	DATE DRAWN: 03/22/13	REV	BY	DATE	DESCRIPTION
CHECKED BY: TW	DATE CHECKED: 03/25/13	A	TW	07/23/13	ISSUE FOR PERMIT
APPROVED BY: TW	DATE APPROVED:				
SCALE: A.N.					

Force Engineering & Testing Inc.
19530 RAMBLEWOOD DRIVE HUMBLE, TX. 77338
(281) 540-6603 Fax: (281) 540-9966
TEXAS REGISTRATION NO: F-4611

STATE OF TEXAS
TERRENCE E. WOLFE
82327
LICENSED
PROFESSIONAL ENGINEER

07/26/13
REG.# F-4611

PROJECT: JONES ALUMINUM CANOPY
LOCATION: BEAUMONT, TX
CONTRACTOR: JONES ALUMINUM
ARCHITECT:

JOB NO: 374-0176-13

DRAWING NO: D1.1

REV NO: A