SERIES FG-5100T HURRICANE RESISTANT THERMAL STOREFRONT SYSTEM FOR USE IN HURRICANE ZONES REQUIRING LARGE & SMALL MISSILE IMPACT PROTECTION (WET & DRY GLAZED).

GENERAL NOTES:

1. SERIES FG-5100T HURRICANE RESISTANT THERMAL STOREFRONT SYSTEM, SHOWN ON THIS PRODUCT EVALUATION DOCUMENT (P.E.D.) HAS BEEN VERIFIED FOR COMPLIANCE IN ACCORDANCE WITH THE 2006 EDITION OF THE INTERNATIONAL BUILDING CODE, (I.B.C) AND INTERNATIONAL RESIDENTIAL CODE, (I.R.C) WITH THE 2006 TEXAS REVISIONS, EFFECTIVE JANUARY 1, 2008.

   DESIGN WIND LOADS SHALL BE DETERMINED AS PER SECTION 1609 OF THE INTERNATIONAL BUILDING CODE, FOR A BASIC WIND SPEED AS REQUIRED BY THE JURISDICTION WHERE PRODUCT WILL BE INSTALLED, AND FOR A DIRECTIONALITY FACTOR Kd = 0.85, IN ACCORDANCE WITH ASCE 7-05 STANDARD, AND SHALL NOT EXCEED THE DESIGN PRESSURE RATING INDICATED ON NOTE 2.

   IN ORDER TO VERIFY THAT ANCHORS ON THIS P.E.D., AS TESTED, WERE NOT OVERSTRESSED, A 33% INCREASE IN ALLOWABLE STRESS FOR WIND LOADS WAS NOT USED IN THEIR ANALYSIS. FASTENERS SPACING TO WOOD HAS BEEN DETERMINED IN ACCORDANCE WITH N.D.S. 2005.

   THIS PRODUCT'S ADEQUACY FOR IMPACT AND CYCLIC RESISTANCE HAS BEEN VERIFIED IN ACCORDANCE WITH SECTIONS 1609.1.4 AND R301.2.1.2 OF THE ABOVE MENTIONED CODES RESPECTIVELY, AS PER FLORIDA BUILDING CODE HIGH VELOCITY HURRICANE ZONES PROTOCOLS TAS-201, TAS-202, TAS-203, AND ASTM E-330 & E-1886/1996, PER CONSTRUCTION CONSULTING LABORATORY INTERNATIONAL REPORT #CCLI-16-087, AND AS PER SUBMITTED STRUCTURAL CALCULATIONS, PERFORMED AS PER SECTION 1604 OF THE ABOVE MENTIONED CODE.

2. MAXIMUM DESIGN PRESSURE RATING FOR THIS WINDOW WALL SYSTEM SHALL BE AS SHOWN ON SHEETS 8 THRU 16.

3. THIS PRODUCT WILL NOT REQUIRE A HURRICANE PROTECTION DEVICE.

4. THIS PRODUCT IS APPROVED FOR AIR/WATER INFILTRATION.

5. SERIES FG-5100T HURRICANE RESISTANT THERMAL STOREFRONT SYSTEM SHALL COMPLY WITH SECTION 2406 OF THE INTERNATIONAL BUILDING CODE.

6. PROVIDE 1/4" MAX. LOAD BEARING SHIM (TYP.), WHEN ALLOWED BY THIS DRAWING.

7. WOOD BUCKS BY OTHERS, MUST BE ANCHORED PROPERLY TO TRANSFER LOADS TO THE BUILDING STRUCTURE. WOOD BUCKS MUST BE SOUTHERN PINE, G = 0.55.

8. REMAINING COMPONENTS FOR THIS WINDOW WALL SYSTEM SHALL BE AS INDICATED ON BILL OF MATERIALS, SHEET 2 OF THIS DRAWING.

9. ALL ALUMINUM EXTRUSIONS IN CONTACT WITH STEEL, CONCRETE, GROUT FILLED CONCRETE BLOCK AND WOOD SHALL COMPLY WITH SECTION 6.7 OF THE ALUMINUM DESIGN MANUAL 2005 EDITION.

10. SHOP DRAWINGS PREPARED BASED ON THIS T.D.I REPORT AND TAKING INTO ACCOUNT THE SPECIFIC JOB CONDITIONS, SHALL BE SUBMITTED TO THE BUILDING OFFICIAL AS PART OF THE PERMIT DOCUMENTS.

11. SUBSTRATE MATERIAL NOTED ON THIS DRAWING AS EXISTING (BY OTHERS), POURED CONCRETE, GROUT FILLED CONCRETE BLOCK AND WOOD MUST WITHSTAND THE LOADS IMPOSED BY THIS PRODUCT.

12. THIS PRODUCT'S INSTALLATION SHALL COMPLY WITH ALL SPECS INDICATED IN THIS DRAWING PLUS ANY BUILDING AND ZONING REGULATIONS PROVIDED BY THE JURISDICTION WHERE PERMIT IS APPLIED TO.

13. (a) THIS P.E.D. PREPARED BY THIS ENGINEER IS GENERIC AND DOES NOT PROVIDE INFORMATION FOR A SITE SPECIFIC PROJECT; i.e. WHERE THE SITE CONDITIONS DEVIATE FROM THE P.E.D.

    (b) CONTRACTOR TO BE RESPONSIBLE FOR THE SELECTION, PURCHASE AND INSTALLATION INCLUDING LIFE SAFETY OF THIS PRODUCT, BASED ON THIS P.E.D., PROVIDED HE/SHE DOES NOT DEVIATE FROM THE CONDITIONS DETAILED ON THIS DOCUMENT. CONSTRUCTION SAFETY AT SITE IS THE CONTRACTOR'S RESPONSIBILITY.

    (c) THIS P.E.D. WILL BE CONSIDERED INVALID IF ALTERED BY ANY MEANS.

    (d) SITE SPECIFIC PROJECTS SHALL BE PREPARED BY A PROFESSIONAL ENGINEER OR ARCHITECT WHICH WILL BECOME THE ENGINEER OF RECORD (E.O.R.) FOR THE PROJECT AND WHO WILL BE RESPONSIBLE FOR THE PROPER USE OF THE P.E.D. ENGINEER OF RECORD, ACTING AS A DELEGATED ENGINEER TO THE P.E.D. ENGINEER, SHALL SUBMIT TO THIS LATTER THE SITE SPECIFIC DRAWINGS FOR REVIEW.

    (e) ORIGINAL P.E.D. SHALL BEAR THE DATE AND ORIGINAL SEAL AND SIGNATURE OF THE PROFESSIONAL ENGINEER OF RECORD THAT PREPARED IT.

14. PRODUCT MANUFACTURER'S LABEL SHALL BE LOCATED ON A READILY VISIBLE LOCATION AT PRODUCT IN ACCORDANCE WITH TEXAS DEPARTMENT OF INSURANCE REQUIREMENTS. ONE LABEL SHALL BE PLACED FOR EVERY OPENING.

INDEX:

SHEET 1: GENERAL NOTES, INDEX AND INSTRUCTIONS.
SHEET 2: BILL OF MATERIALS.
SHEET 3: COMPONENTS.
SHEET 4: COMPONENTS (CON'T).
SHEET 5: COMPONENTS (CON'T).
SHEET 6: OLDCASTLE BUILDINGENVELOPE FG-5100T FLUSH GLAZED ALUM STOREFRONT SYSTEM.
SHEET 7: TYPICAL GLAZING DETAILS & GLASS SCHEDULE.
SHEET 8: MAXIMUM A.S.D. DESIGN PRESSURE RATING SCHEDULE FOR A GIVEN GLASS TYPE AND GLASS PANEL DIMENSIONS.
SHEET 9: MAXIMUM A.S.D. DESIGN PRESSURE RATING FOR STANDARD MULLIONS SPAN.
SHEET 10: MAXIMUM A.S.D. DESIGN PRESSURE RATING FOR JAMB MULLIONS SPAN.
SHEET 11: MAXIMUM A.S.D. DESIGN PRESSURE RATING FOR CORNER AND DOOR JAMB MULLION SPAN.
SHEET 12: MAXIMUM A.S.D. DESIGN PRESSURE RATING FOR HORIZONTAL SPAN.
SHEET 13: MAXIMUM A.S.D. DESIGN PRESSURE RATING FOR MULLION CONNECTIONS W/ MAXIMUM E.D.
SHEET 14: MAXIMUM A.S.D. DESIGN PRESSURE RATING FOR MULLION CONNECTIONS W/ INTERMEDIATE E.D.
SHEET 15: MAXIMUM A.S.D. DESIGN PRESSURE RATING FOR MULLION CONNECTIONS W/ MINIMUM E.D.
SHEET 16: MAXIMUM A.S.D. DESIGN PRESSURE RATING FOR DOOR JAMB MULLION CONNECTIONS W/ MAX. & INTERMEDIATE E.D.
SHEET 17: HEAD CONNECTIONS DETAILS.
SHEET 18: HEAD CONNECTIONS DETAILS (CON'T).
SHEET 19: SILL CONNECTION DETAILS.
SHEET 20: SILL CONNECTION DETAILS.
SHEET 21: SILL CONNECTION DETAILS.
SHEET 22: STANDARD/JAMB MULLION & HORIZONTAL DETAILS.
SHEET 23: STANDARD/JAMB MULLION DETAILS.
SHEET 24: CORNER & EXPANSION MULLION DETAILS.
SHEET 25: HEAD CONNECTIONS DETAILS AT TRANSOM AT DOOR.
SHEET 26: SILL CONNECTIONS DETAILS AT TRANSOM AT DOOR + THRESHOLD DETAIL AT DOOR.
SHEET 27: DOOR JAMB MULLION DETAILS AT DOOR & TRANSOM.
SHEET 28: HORIZONTAL CONNECTIONS (ISOMETRIC).

INSTRUCTIONS:

STEP 1: DETERMINE A.S.D. DESIGN WIND LOAD REQUIREMENTS BASED ON WIND VELOCITY, BUILDING HEIGHT, WIND ZONE, USING APPLICABLE ASCE 7 STANDARDS.

STEP 2: GO TO SCHEDULE ON SHEET 8 TO DETERMINE MAXIMUM A.S.D. DESIGN PRESSURE RATING (psf) OF DESIRED GLASS SIZE BASED ON GLASS PANEL DIMENSIONS.

STEP 3: DETERMINE MAXIMUM MULLION SPAN "L"(FT) FOR A GIVEN MULLION EFFECTIVE SPACING "b", ON SCHEDULES ON SHEETS 9, 10 & 11, AND WITH EFFECTIVE D.L.O ON SHEET 12. SELECT ANCHOR OPTIONS W/ A.S.D. DESIGN PRESSURE RATING EQUAL OR GREATER THAN DESIGN LOAD SPECIFIED IN STEP 1 USING SCHEDULES ON SHEETS 13, 14, 15 & 16.

STEP 4: THE LOWEST VALUE OF A.S.D. DESIGN PRESSURE RATING RESULTING FROM STEPS 2 AND 3 SHALL APPLY TO THE ENTIRE SYSTEM.

THIS DRAWING SHALL ONLY BE USED TO OBTAIN PERMITS UNDER THE TEXAS DEPARTMENT OF INSURANCE JURISDICTION

TEXAS DEPARTMENT OF INSURANCE - 2006

SERIES FG-5100T
HURRICANE RESISTANT
THERMAL STOREFRONT SYSTEM

DRAWN BY: F.R.L
2/3/17
DATE

17-011
DRAWING No

SHEET 1 OF 28

Oldcastle BuildingEnvelope
803 AIRPORT RD. TERRELL TX 75160
www.OldcastleBE.com-Phone 800-869-4567

REV. No	DESCRIPTION	DATE	REV. No	DESCRIPTION	DATE
1			3		
2			4		

WALTER A. TILLIT Jr P.E.
PROFESSIONAL ENGINEER
6355 N.W 36 STREET, STE. 305
VIRGINIA GARDENS, FL 33166
PHONE(305) 871-1530 FAX (305) 871-1531
TEXAS LIC. # 90691
FIRM REGISTRATION # F-13790

P.E. SEAL/SIGNATURE/DATE

BILL OF MATERIALS

ITEM No.	PART NUMBER	DESCRIPTION	DIMENSIONS	MATERIAL	MANUFACTURER	NOTES
1.	CW-998	BULB GASKET	0.27" X 0.25"	FOAM TITE	AMESBURY	
2.	FG-1133	EXTERIOR GLAZING GASKET	0.197" SPACE	EPDM	EPG	
3.	FG5000-PP-8	STEEL CHANNEL	1.25" X 4.560" X 0.25"	A36 STEEL	VARIES	ZINC PLATED
4.	FG5100-FP-5	WATER DIVERTER	0.876" X 1.465" X 0.032"	RIGID PVC	OLDCASTLE BE	
5.	FG5000-FP-14	END DAM	5.25" X 3.188" X 0.062"	6063-T6 ALUMINUM	OLDCASTLE BE	
6.	FG-5168	DOOR JAMB MULLION	2.50" X 5.00" X 0.150"	6063-T6 ALUMINUM	OLDCASTLE BE	
7.	FG-5177	GLASS STOP	2.50" X 5.00" X 0.150"	6063-T5 ALUMINUM	OLDCASTLE BE	
8.	FG-5178	DOOR TRANSOM HEAD	2.50" X 4.90" X 0.080"	6063-T6 ALUMINUM	OLDCASTLE BE	
9.	FG-5181	TRANSOM ADAPTOR	2.695" X 1.00" X 0.062"	6063-T5 ALUMINUM	OLDCASTLE BE	
10.	FG-5182	TRANSOM ADAPTOR STOP	0.767" X 1.00" X 0.062"	6063-T5 ALUMINUM	OLDCASTLE BE	
11.	FG-5185	SPACER GASKET	0.25" SPACER	SILICONE	EPG	
12.	FG-5186	SETTING BLOCK	0.75" X 0.25" X 4.00"	SILICONE	VARIES	
13.	FG-5213	HEAD/SILL	2.50" X 4.98" X 0.080"	6063-T6 ALUMINUM	OLDCASTLE BE	
14.	FG-5214	INTERMEDIATE HORIZONTAL	2.50" X 4.98" X 0.080"	6063-T6 ALUMINUM	OLDCASTLE BE	
15.	FG-5217	OPEN BACK MULLION FILLER	0.780" X 4.66" X 0.080"	6063-T6 ALUMINUM	OLDCASTLE BE	
16.	FG-5226	SETTING CHAIR	1.269" X 1.535" X 0.094"	6063-T5 ALUMINUM	OLDCASTLE BE	
17.	FG-5235	TRANSOM BAR	4.980" X 2.50" X 0.094"	6063-T6 ALUMINUM	OLDCASTLE BE	
18.	FG-5250	HEAD/JAMB/MULLION - LIGHT DUTY	2.50" X 5.00" X 0.094"	6063-T6 ALUMINUM	OLDCASTLE BE	
19.	FG-5251	JAMB/MULLION - HEAVY DUTY	2.50" X 5.00" X 0.250"	6063-T6 ALUMINUM	OLDCASTLE BE	
20.	FG-5252	PREGLAZED SILL	2.50" X 4.98" X 0.080"	6063-T6 ALUMINUM	OLDCASTLE BE	
21.	FG-5253	PREGLAZED ANCHOR	6.539" X 1.271" X 0.078"	6063-T6 ALUMINUM	OLDCASTLE BE	
22.	FG-5254	HEAD/JAMB FILLER	4.660" X 1.084" X 0.070"	6063-T6 ALUMINUM	OLDCASTLE BE	
23.	FG-5255	DEEP POCKET FILLER	1.714" X 4.65" X 0.094"	6063-T6 ALUMINUM	OLDCASTLE BE	
24.	FG-5256	EXPANSION MULLION - MALE	1.96" X 5.00" X 0.094"	6063-T6 ALUMINUM	OLDCASTLE BE	
25.	FG-5257	EXPANSION MULLION - FEMALE	1.41" X 5.00" X 0.094"	6063-T6 ALUMINUM	OLDCASTLE BE	
26.	FG-5258	GLASS STOP	1.645" X 1.399" X 0.078"	6063-T6 ALUMINUM	OLDCASTLE BE	
27.	FG-5259	SILL POCKET FILLER	1.638" X 0.344" X 0.050"	6063-T6 ALUMINUM	OLDCASTLE BE	
28.	FG-5260	SUBSILL	3.192" X 5.276" X 0.078"	6063-T6 ALUMINUM	OLDCASTLE BE	
29.	FG-5261	90 DEGREE CORNER MULLION	5.50" X 5.50" X 0.125"	6063-T6 ALUMINUM	OLDCASTLE BE	
30.	FG-5262	135 DEGREE CORNER MULLION	3.00" X 5.00" X 0.125"	6063-T6 ALUMINUM	OLDCASTLE BE	
31.	FG-5949	DRY GLAZED GASKET	0.25" X 0.813"	SPONGE AND EPDM	EPG	
32.	SM-5601	JOINT SEALANT TAPE	0.125" X 0.50" VARIES	ISOCRYL	SCHNEE	
33.	BACKER ROD	USED AT PERIMETER	FILL SPACE	POLY	VARIES	
34.	995	STRUCTURAL SILICONE SEALANT	FILL SPACE	SILICONE	DOW CORNING	
35.	795	STRUCTURAL SILICONE SEALANT	PERIMETER	SILICONE	DOW CORNING	
36.	SU 311-19T	STRUCTURAL THERMAL BARRIER POLYMER	FILL SPACE ON EXTRUSIONS	POLYMER	AZON	
37.	HP-17	SETTING BLOCK	0.25" X 1.316" X 4.00"	SILICONE	EPG	
38.	FASTENER	FOR CORNER MULLIONS 29 & 30	# 10-24 x 1 1/4" P.H.H. S.S. SCREW	410 S.S	ELCO C.PRODUCTS	SEE DETAIL SHEET 24
39.	FS-38	FOR DOOR JAMB MULLION REINFORCEMENT	1/4"-20 x 1/2" H.H. TYPE F SELF TAPPING MACHINE SCREW	STEEL	VARIES	SEE DETAIL SHEET 27
40.	FASTENER	FOR 9 CONNECTING TO DOOR JAMB MULLION	# 12 X 1" PFH SMS SCREW	STEEL	VARIES	SEE DETAIL SHEET 27
41.	FASTENER	FOR 18 TO 21 CONNECTION	1/4"-14 x 1 3/8" Hx WASHER HD. SCREW	STEEL	VARIES	SEE DETAIL SHEET 18
42.	FASTENER	FOR 14 TO 28 CONNECTION	5/16"-24 x 1 1/2" FH TYPE F SCREW	STEEL	VARIES	SEE DETAIL SHEET 19 & 21
43.	FASTENER	FOR 20 TO 28 CONNECTION	5/16"-24 x 2" GRADE 5 HWH SCREW	STEEL	VARIES	SEE DETAIL SHEET 20
44.	TH-57	THRESHOLD FOR DOOR	1/2" x 5 5/8" x 1/8"	6063-T6	OCBE	SEE DETAIL SHEET 26
45.	FS-8	SPLINE ASSEMBLY SCREW	#14 X 1 HHSTS	STEEL	VARIES	SEE DETAIL SHEETS 22, 25, 26 & 28

TEXAS DEPARTMENT OF INSURANCE - 2006

SERIES FG-5100T
HURRICANE RESISTANT
THERMAL STOREFRONT SYSTEM

DRAWN BY: F.R.L
DATE 2/3/17

Oldcastle BuildingEnvelope™
803 AIRPORT RD. TERRELL, TX 75160
www.OldcastleBE.com-Phone 800-869-4567

17-011
DRAWING No

SHEET 2 OF 28

REV. No.	DESCRIPTION	DATE	REV. No.	DESCRIPTION	DATE
1			3		
2			4		

WALTER A. TILLIT Jr P.E.
PROFESSIONAL ENGINEER
6355 N.W 36 STREET, STE. 305
VIRGINIA GARDENS, FL 33166
PHONE(305) 871-1530 FAX (305) 871-1531
TEXAS LIC. # 90691
FIRM REGISTRATION # F-13790

STATE OF TEXAS
WALTER A. TILLIT
90691
LICENSED
PROFESSIONAL ENGINEER

11/6/17

P.E. SEAL/SIGNATURE/DATE

SERIES FG-5100T HURRICANE RESISTANT THERMAL STOREFRONT SYSTEM COMPONENTS

N.T.S

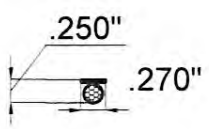

1 BULB GASKET
CW-998

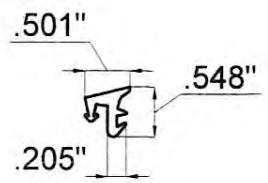

2 GASKET
FG-1133

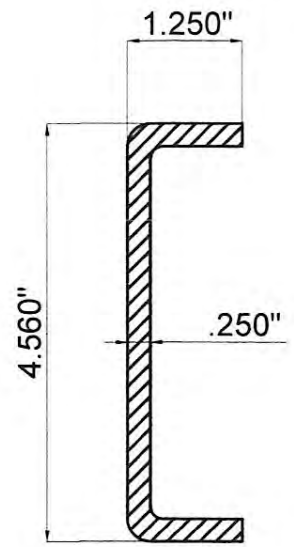

3 STEEL CHANNEL
FG-5000-PP-8

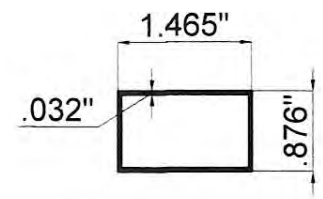

4 WATER DIVERTER
FG5100-FP-5

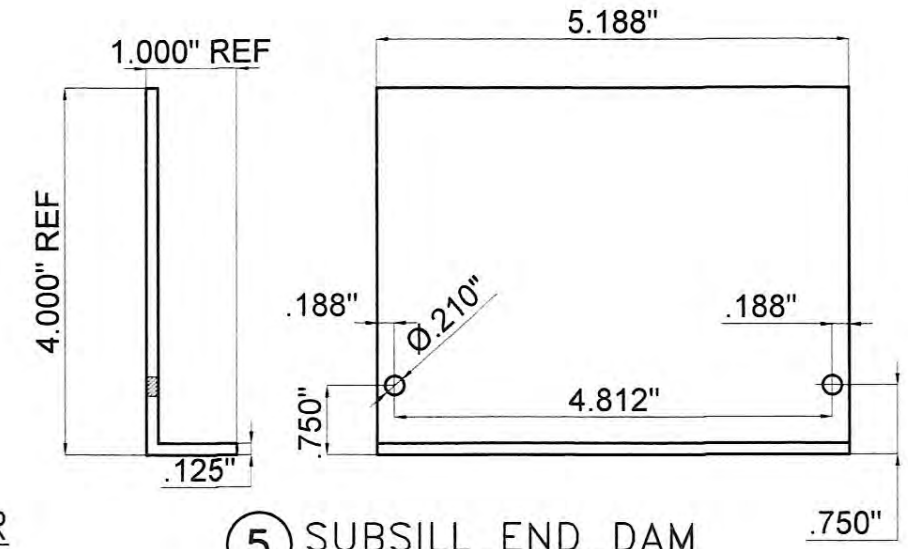

5 SUBSILL END DAM
FG-5100-FP-14

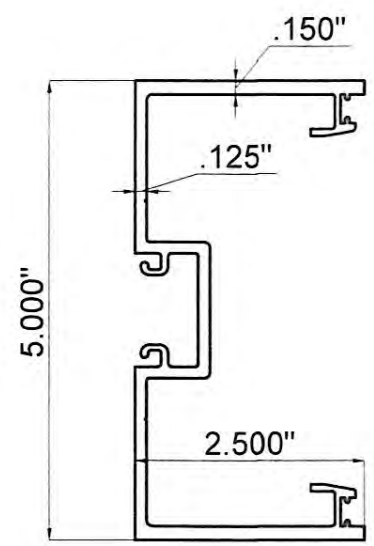

6 DOOR JAMB
FG-5168

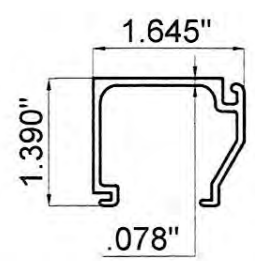

7 GLASS STOP
FG-5177

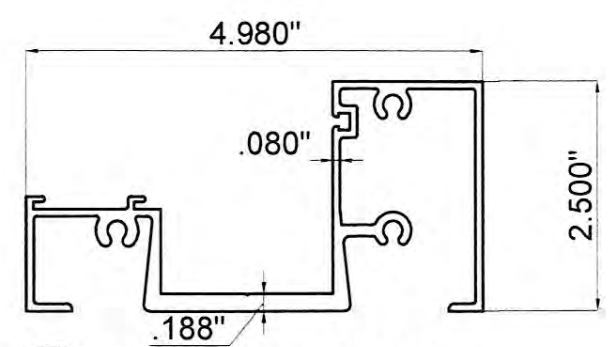

8 TRANSOM HEAD
FG-5178

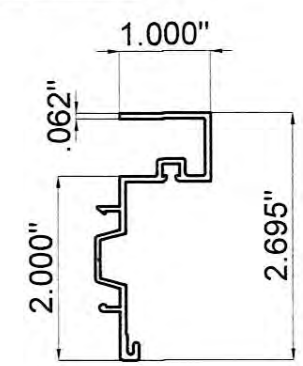

9 TRANSOM ADAPTOR
FG-5181

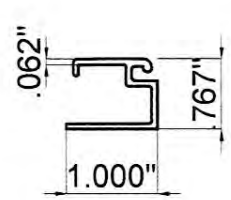

10 TRANSOM ADAPTOR STOP
FG-5182

11 SPACER GASKET
FG-5185

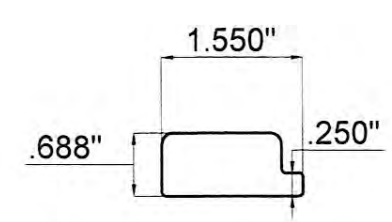

12 SETTING BLOCK
FG-5186

TEXAS DEPARTMENT OF INSURANCE - 2006

SERIES FG-5100T
HURRICANE RESISTANT
THERMAL STOREFRONT SYSTEM

Oldcastle BuildingEnvelope
803 AIRPORT RD. TERRELL, TX 75160
www.OldcastleBE.com-Phone 800-869-4367

REV. No	DESCRIPTION	DATE	REV. No	DESCRIPTION	DATE
1			3		
2			4		

DRAWN BY: F.R.L.
DATE 2/3/17
17-011 DRAWING No
SHEET 3 OF 28

WALTER A. TILLIT Jr P.E.
PROFESSIONAL ENGINEER
6355 N.W 36 STREET, STE. 305
VIRGINIA GARDENS, FL 33166
PHONE(305) 871-1530 FAX (305) 871-1531
TEXAS LIC. # 90691
FIRM REGISTRATION # F-13790

11/6/17

P.E. SEAL/SIGNATURE/DATE

SERIES FG-5100T HURRICANE RESISTANT THERMAL STOREFRONT SYSTEM COMPONENTS (CON'T)

N.T.S

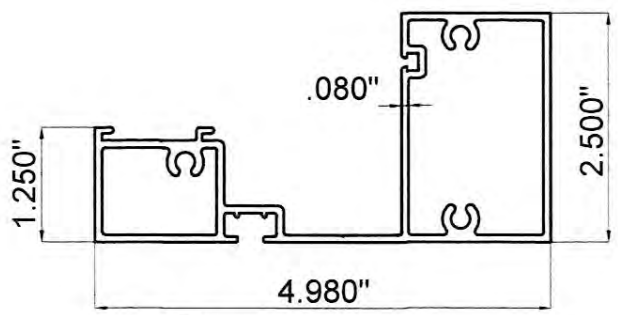

(13) SILL FG-5213

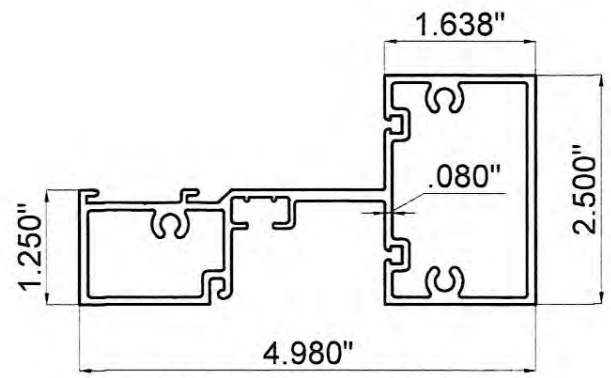

(14) INT. HORIZONTAL FG-5214

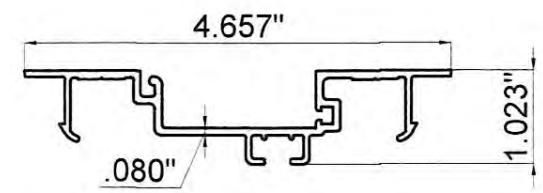

(15) MULLION FILLER FG-5217

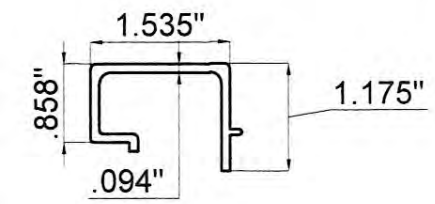

(16) SETTING CHAIR FG-5226

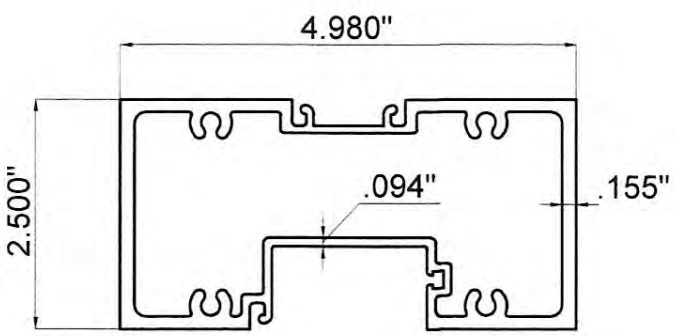

(17) TRANSOM BAR FG-5235

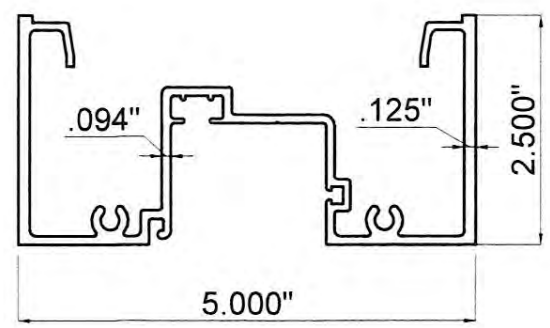

(18) MULLION HEAD & JAMB FG-5250

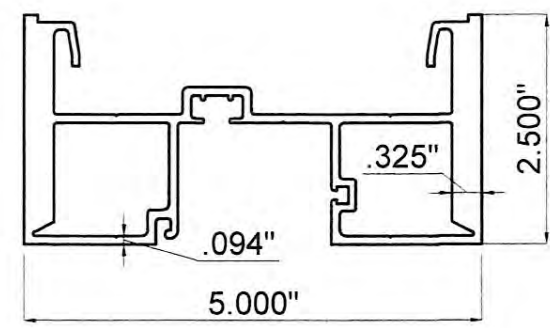

(19) HEAVY MULLION & JAMB FG-5251

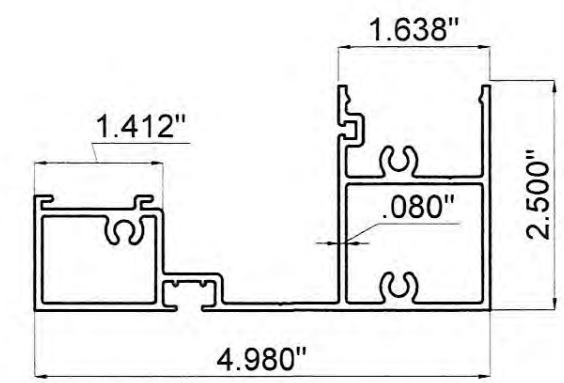

(20) HEAD / SILL FG-5252

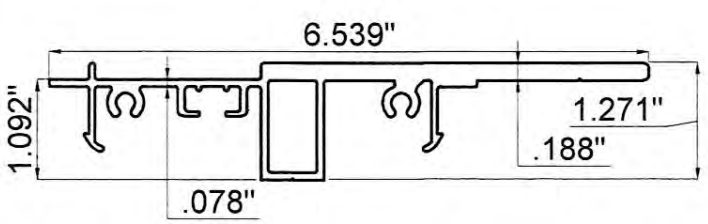

(21) PREGLAZE ANCHOR PLATE FG-5253

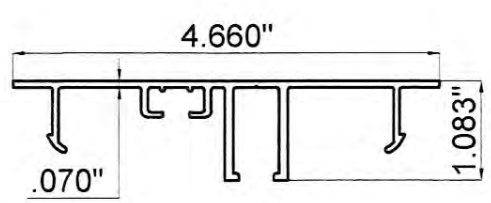

(22) HEAD/JAMB FILLER FG-5254

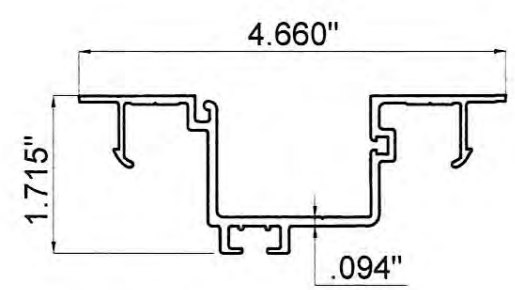

(23) DEEP POCKET FILLER FG-5255

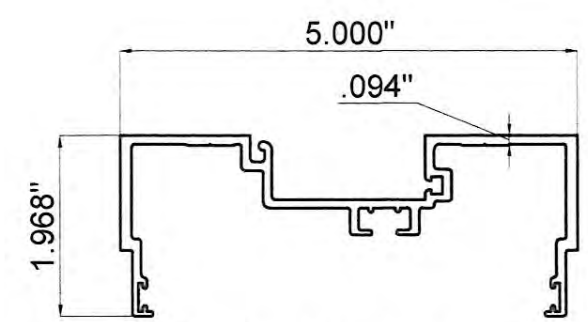

(24) EXPANSION MULLION MALE FG-5256

TEXAS DEPARTMENT OF INSURANCE – 2006

SERIES FG-5100T
HURRICANE RESISTANT
THERMAL STOREFRONT SYSTEM

Oldcastle BuildingEnvelope
803 AIRPORT RD. TERRELL, TX 75160
www.OldcastleBE.com-Phone 800-869-4567

REV. No	DESCRIPTION	DATE	REV. No	DESCRIPTION	DATE
1			3		
2			4		

DRAWN BY: F.R.L 2/3/17

DATE

17-011
DRAWING No

SHEET 4 OF 28

WALTER A. TILLIT Jr P.E.
PROFESSIONAL ENGINEER
6355 N.W 36 STREET, STE. 305
VIRGINIA GARDENS, FL 33166
PHONE(305) 871-1531 FAX (305) 871-1531
TEXAS LIC. # 90691
FIRM REGISTRATION # F-13790

11/6/17

P.E. SEAL/SIGNATURE/DATE

SERIES FG-5100T HURRICANE RESISTANT THERMAL STOREFRONT SYSTEM COMPONENTS (CON'T)

N.T.S

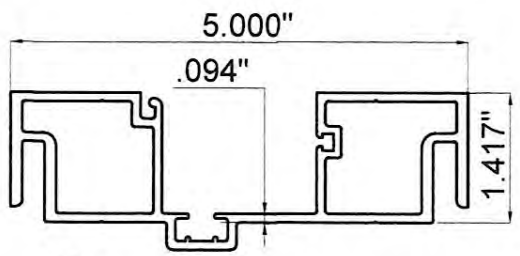

(25) EXPANSION MULLION FEMALE FG-5257

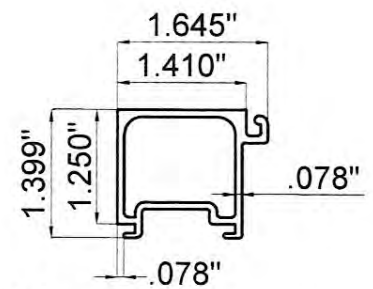

(26) GLASS STOP FG-5258

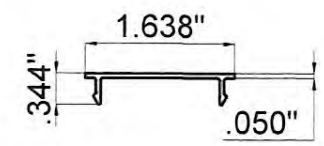

(27) POCKET FILLER FG-5259

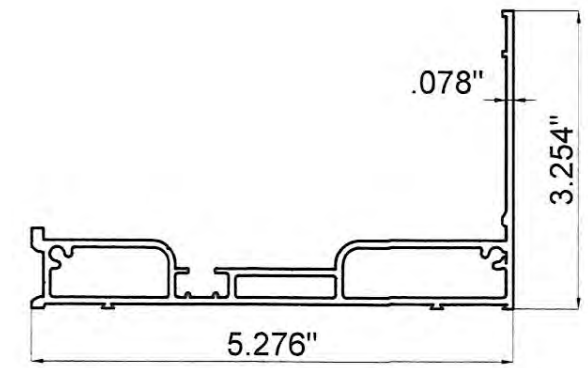

(28) SILL FLASHING FG-5260

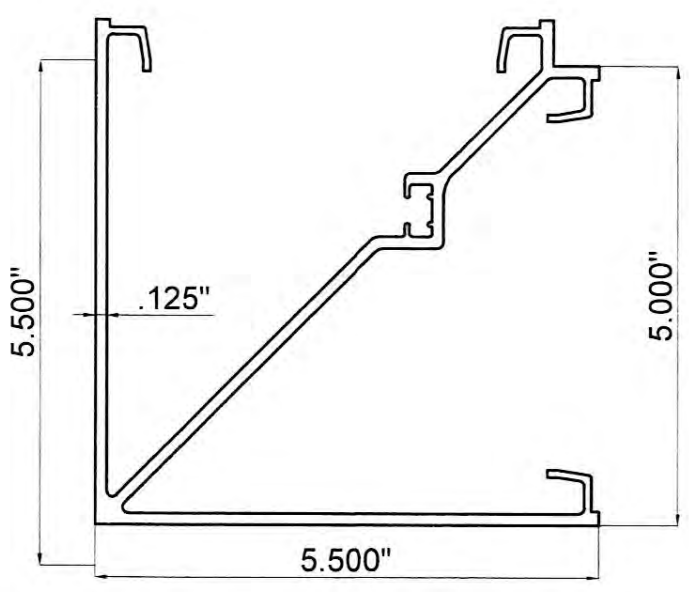

(29) 90 DEGREE CORNER MULLION FG-5261

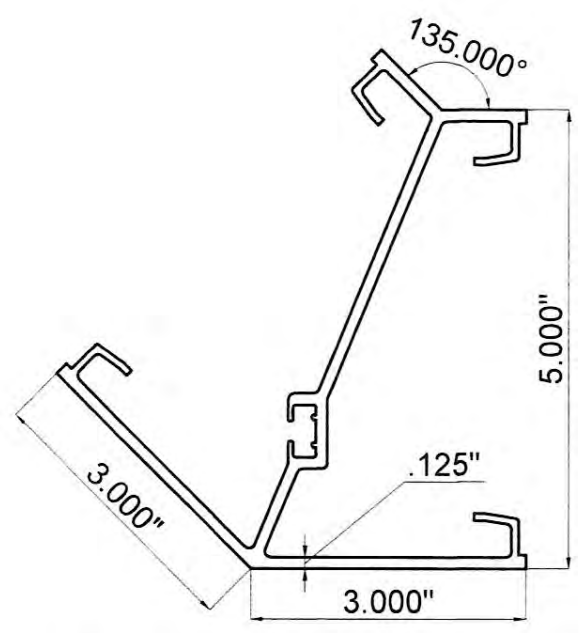

(30) 135 DEGREE CORNER FG-5262

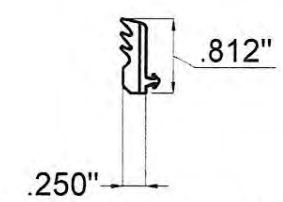

(31) DRY GLAZE GASKET FG-5949

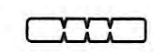

(37) SETTING BLOCK HP-17

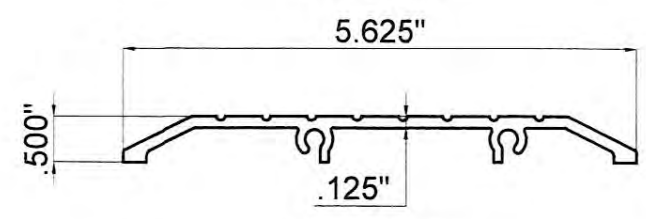

(44) THRESHOLD TH-57

TEXAS DEPARTMENT OF INSURANCE - 2006

SERIES FG-5100T
HURRICANE RESISTANT
THERMAL STOREFRONT SYSTEM

Oldcastle BuildingEnvelope™
803 AIRPORT RD. TERRELL TX 75160
www.OldcastleBE.com-Phone 800-869-4567

DRAWN BY: F.R.L
DATE 2/3/17
17-011
DRAWING No
SHEET 5 OF 28

REV. No.	DESCRIPTION	DATE	REV. No.	DESCRIPTION	DATE
1			3		
2			4		

WALTER A. TILLIT Jr P.E.
PROFESSIONAL ENGINEER
6355 N.W 36 STREET, STE. 305
VIRGINIA GARDENS, FL 33166
PHONE(305) 871-1530 FAX (305) 871-1531
TEXAS LIC. # 90691
FIRM REGISTRATION # F-13790

STATE OF TEXAS
WALTER A. TILLIT JR.
90691
LICENSED
PROFESSIONAL ENGINEER

P.E. SEAL/SIGNATURE/DATE

OLDCASTLE BUILDINGENVELOPE FG-5100T HURRICANE RESISTANT FLUSH GLAZED ALUM. STOREFRONT SYSTEM

N.T.S.

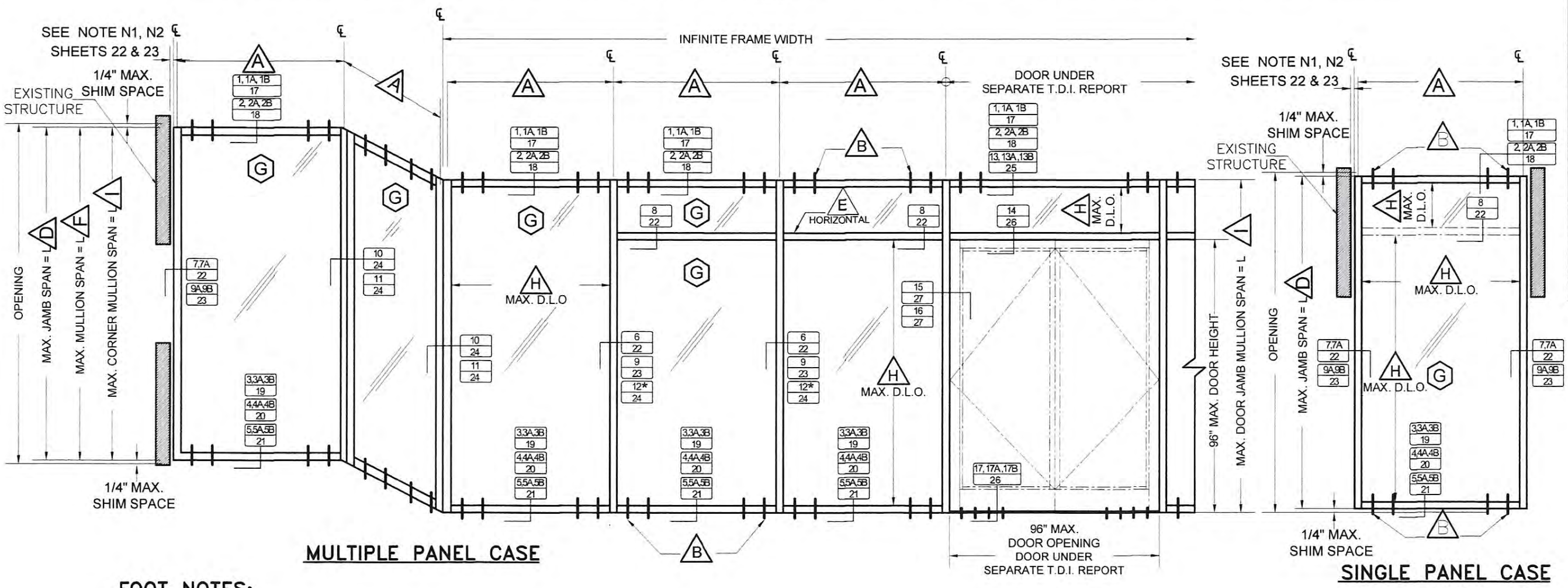

MULTIPLE PANEL CASE

SINGLE PANEL CASE

FOOT NOTES:

- (A) FOR MAXIMUM MULLION SPACING SEE SHEETS 9, 10 & 11.
- (B) FOR HEAD AND SILL FASTENERS QUANTITY FOR MULLIONS, SEE SHEETS 13, 14, 15 & 16.
- (D) FOR MAXIMUM JAMB MULLION SPAN VERSUS DESIGN PRESSURE RATING SEE SHEET 10.
- (E) USE OF HORIZONTALS (SEE SECTION 8/22) IS LIMITED AS PER SHEET 12.
- (F) FOR MAXIMUM STANDARD MULLION SPAN VERSUS DESIGN PRESSURE RATING SEE SHEET 9.
- (G) FOR GLAZING DETAILS AND GLASS SCHEDULE SEE SHEET 7.
- (H) FOR MAXIMUM D.L.O. AND DESIGN PRESSURE RATING FOR GLASS, SEE SCHEDULE ON SHEET 8.
- (I) FOR MAXIMUM DOOR JAMB MULLION & CORNER MULLION SPAN VERSUS DESIGN PRESSURE RATING SEE SHEET 11.

* USE EXPANSION MULLION AT 20'-0" O.C (MAX.)

TEXAS DEPARTMENT OF INSURANCE – 2006

SERIES FG-5100T
HURRICANE RESISTANT
THERMAL STOREFRONT SYSTEM

Oldcastle BuildingEnvelope
803 AIRPORT RD. TERRELL TX 75160
www.OldcastleBE.com-Phone 800-869-4367

REV. No	DESCRIPTION	DATE	REV. No	DESCRIPTION	DATE
1			3		
2			4		

DRAWN BY: F.R.L
DATE 2/3/17
DRAWING No 17-011
SHEET 6 OF 28

WALTER A. TILLIT Jr P.E.
PROFESSIONAL ENGINEER
6355 N.W 36 STREET, STE. 305
VIRGINIA GARDENS, FL 33166
PHONE(305) 871-1531 FAX (305) 871-1531
TEXAS LIC. # 90691
FIRM REGISTRATION # F-13790

STATE OF TEXAS
WALTER A. TILLIT
90691
LICENSED
PROFESSIONAL ENGINEER
14/6/17
P.E. SEAL/SIGNATURE/DATE

TYPICAL GLAZING DETAIL OPTIONS

N.T.S

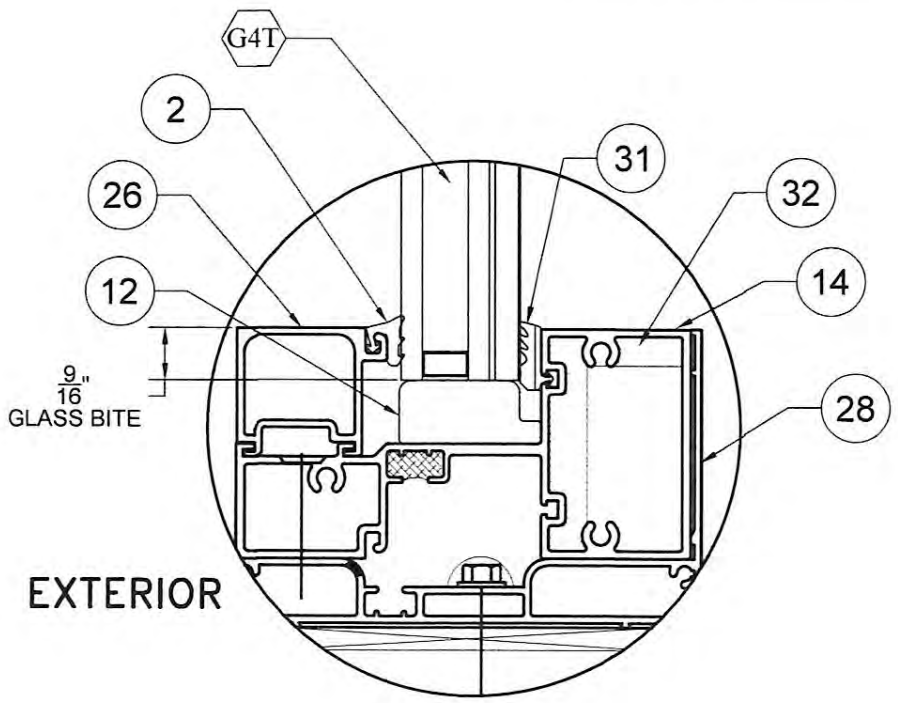

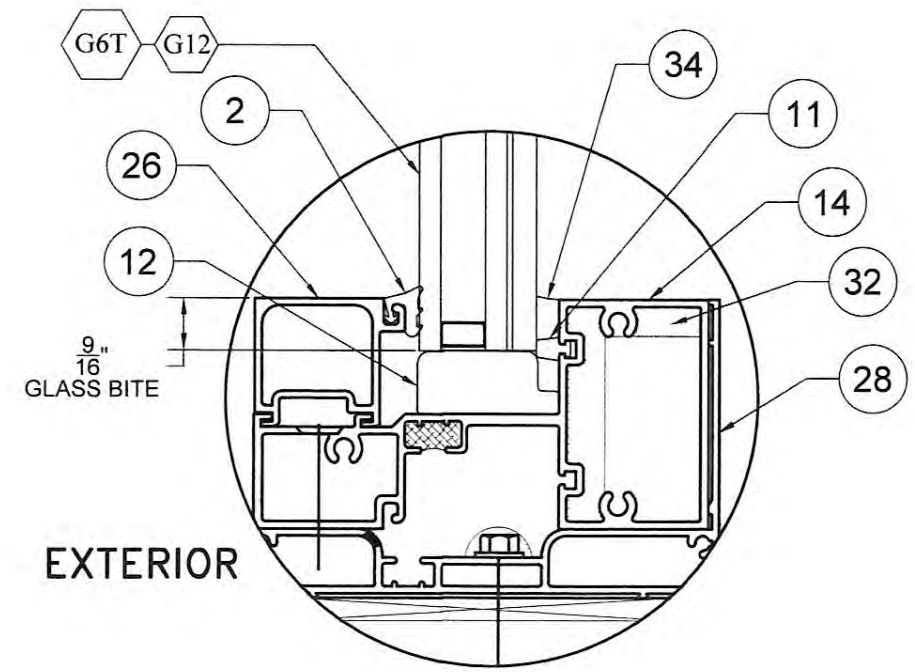

DRY GLAZED

WET GLAZED

GLASS SCHEDULE (DRY GLAZED)

GLASS LABEL	GLASS COMPOSITION	MANUFACTURER NAME	MAXIMUM D.L.O.	ALLOWABLE WIND ZONE INSTALLATION
G4T	1 5/16" INSULATED LAMINATED GLASS CONSISTING OF EXTERIOR 1/4" TEMP 1/2" AIR SPACE 1/4" H.S. GLASS, AND A 0.090" SENTRYGLAS COMPOSITE INTERLAYER- 1/4" H.S.	KURARAY	SEE SCHEDULE ON SHEET 8	1, 2 3 & 4. PER ASTM E-1996

GLASS SCHEDULE (WET GLAZED)

GLASS LABEL	GLASS COMPOSITION	MANUFACTURER NAME	MAXIMUM D.L.O.	ALLOWABLE WIND ZONE INSTALLATION
G6T *	1 5/16" OVERALL THICKNESS INSULATED GLASS CONSISTING OF 1/4" TEMP GLASS OB 1/2" SPACER 1/4" H.S. GLASS OVER 0.090" BUTACITE OVER 1/4" H.S. GLASS	OBE	SEE SCHEDULE ON SHEET 8	1,2 & 3. PER ASTM E-1996
G12	1 5/16" OVERALL THICKNESS INSULATED GLASSCONSISTING OF 1/4" TEMP GLASS OB 1/2" SPACER 1/4" H.S. GLASS OVER 0.075" SAFLEX CP/STORMGLASS OVER 1/4" H.S. GLASS	OBE	SEE SCHEDULE ON SHEET 8	1, 2 3 & 4. PER ASTM E-1996

* WHEN INSTALLING A DOOR IN THIS SYSTEM, GLASS PANELS ADJACENT TO DOOR MUST BE GLAZED WITH EXTERIOR 1/4" TEMPERED GLASS IN LIEU OF 1/4" H.S.

TEXAS DEPARTMENT OF INSURANCE - 2006

SERIES FG-5100T
HURRICANE RESISTANT
THERMAL STOREFRONT SYSTEM

Oldcastle BuildingEnvelope
803 AIRPORT RD. TERRELL, TX 75160
www.OldcastleBE.com-Phone 800-869-4567

REV. No.	DESCRIPTION	DATE
1	T.D.I. REVISION	1/12/17
2		
3		
4		

DRAWN BY: F.R.L 2/3/17
DATE
17-011 DRAWING No
SHEET 7 OF 28

WALTER A. TILLIT Jr P.E.
PROFESSIONAL ENGINEER
6355 N.W 36 STREET, STE. 305
VIRGINIA GARDENS, FL 33166
PHONE(305) 871-1531 FAX (305) 871-1530
TEXAS LIC. # 90691
FIRM REGISTRATION # F-13790

STATE OF TEXAS
WALTER A. TILLIT
90691
LICENSED
PROFESSIONAL ENGINEER
11/6/17
P.E. SEAL/SIGNATURE/DATE

MAXIMUM DESIGN PRESSURE RATING (psf) SCHEDULE FOR A GIVEN GLASS TYPE AND GLASS PANEL DIMENSIONS "a" (in) x "b" (in)

(SEE LEGEND)

DRY GLAZED GLASS TYPE G4T

DIMENSION "a" *	DIMENSION "b" *	MAXIMUM DESIGN PRESSURE RATING(psf)
24"	FROM 24" TO 102"	75.0
30"	FROM 30" TO 102"	75.0
36"	FROM 36" TO 102"	75.0
42"	FROM 42" TO 102"	75.0
48"	FROM 48" TO 102"	75.0
54"	FROM 54" TO 102"	75.0
60"	FROM 60" TO 102"	75.0
62.5"	FROM 62.5" TO 102"	75.0

WET GLAZED GLASS TYPE G6T

DIMENSION "a" *	DIMENSION "b" *	MAXIMUM DESIGN PRESSURE RATING(psf)
24"	FROM 24" TO 108"	60.0
30"	FROM 30" TO 108"	60.0
36"	FROM 36" TO 108"	60.0
42"	FROM 42" TO 108"	60.0
47"	FROM 47" TO 108"	60.0

WET GLAZED GLASS TYPE G12

DIMENSION "a" *	DIMENSION "b" *	MAXIMUM DESIGN PRESSURE RATING(psf)
24"	FROM 24" TO 108"	75.0
30"	FROM 30" TO 108"	75.0
36"	FROM 36" TO 108"	75.0
42"	FROM 42" TO 108"	75.0
48"	FROM 48" TO 108"	75.0
54"	FROM 54" TO 108"	75.0
60"	FROM 60" TO 102"	75.0
66"	FROM 66" TO 96"	75.0
72"	FROM 72" TO 90"	75.0
74.5"	FROM 74.5" TO 86.5"	75.0
74.5"	FROM 86.5" TO 92.5"	70.9
74.5"	FROM 92.5" TO 98.5"	67.4
74.5"	FROM 98.5" TO 104.5"	64.4
74.5"	FROM 104.5" TO 108"	62.7

* DETERMINATION OF MAXIMUM DAY LIGHT OPENING (D.L.O.) AT EACH END OF GLASS GIVEN "a" & "b"

SIDE	MAXIMUM DAY LIGHT OPENING	
	(D.L.O.) Formula at Vertical & Horizontal Mullions	(D.L.O.) Formula at Jamb, Head & Sill Frames
MAX. D.L.O. (a) (SHORT SIDE)	"a"−5.00"	"a"−5.00"
MAX. D.L.O. (b) (LONG SIDE)	"b"−5.00"	"b"−5.00"

DIMENSIONS LEGEND *

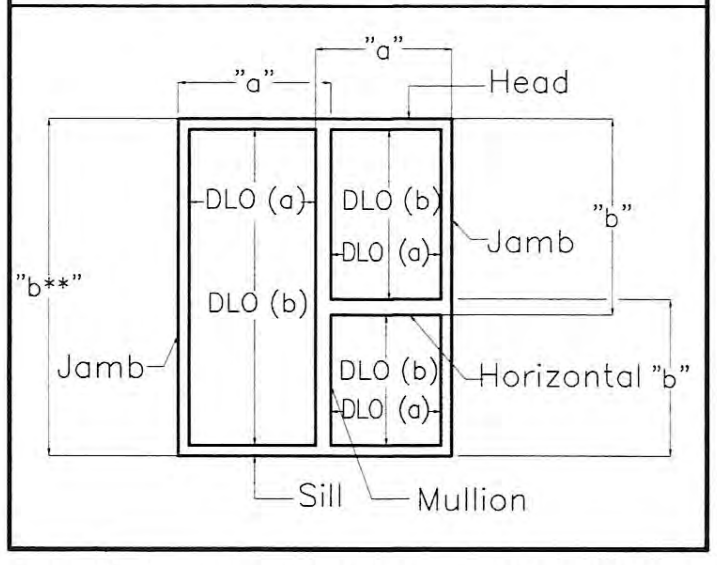

* SIDE "a" IS ALWAYS EQUAL OR SHORTER THAN "b". "a", "b" MAY BE ORIENTED IN ANY DIRECTION.

** TOTAL "b" DIMENSION NOT TO EXCEED 108"

TEXAS DEPARTMENT OF INSURANCE – 2006

SERIES FG-5100T
HURRICANE RESISTANT
THERMAL STOREFRONT SYSTEM

Oldcastle BuildingEnvelope
803 AIRPORT RD. TERRELL, TX 75160
www.OldcastleBE.com-Phone 800-869-4567

REV. No.	DESCRIPTION	DATE
1	T.D.I. REVISION	11/2/17
2		
3		
4		

DRAWN BY: F.R.L 2/3/17
DATE
17-011 DRAWING No
SHEET 8 OF 28

WALTER A. TILLIT Jr P.E.
PROFESSIONAL ENGINEER
6355 N.W 36 STREET, STE. 305
VIRGINIA GARDENS, FL 33166
PHONE(305) 871-1530 FAX (305) 871-1531
TEXAS LIC. # 90691
FIRM REGISTRATION # F-13790

STATE OF TEXAS
WALTER A. TILLIT
90691
LICENSED
PROFESSIONAL ENGINEER

11/6/17

P.E. SEAL/SIGNATURE/DATE

MAXIMUM STANDARD MULLION SPAN "L"(ft) SCHEDULE FOR A GIVEN DESIGN PRESSURE RATING (psf) AND A GIVEN EFFECTIVE SPACING "b" (ft–in) *

MAXIMUM DESIGN PRESSURE RAITING W(PSF)	EFFECTIVE SPACING "b" (Ft-in)	(A) SPAN L (Ft-in)	(B) SPAN L (Ft-in)	(C) SPAN L (Ft-in)
±50.0	3' - 6"	9' - 1"	12' - 2"	9' - 2"
	4' - 0"	9' - 1"	12' - 0"	9' - 2"
	4' - 8"	9' - 1"	10' - 11"	9' - 2"
	5' - 0"	9' - 1"	10' - 3"	9' - 2"
	5' - 4"	9' - 1"	10' - 1"	9' - 2"
	5' - 8"	8' - 11"	10' - 1"	9' - 2"
	6' - 0"	8' - 7"	10' - 1"	9' - 2"
±55.0	3' - 6"	9' - 1"	12' - 2"	9' - 2"
	4' - 0"	9' - 1"	11' - 7"	9' - 2"
	4' - 8"	9' - 1"	10' - 1"	9' - 2"
	5' - 0"	9' - 1"	10' - 1"	9' - 2"
	5' - 4"	8' - 8"	10' - 1"	9' - 2"
	5' - 8"	8' - 7"	10' - 1"	9' - 2"
	6' - 0"	8' - 7"	10' - 1"	9' - 2"
±60.0	3' - 6"	9' - 1"	11' - 10"	9' - 2"
	4' - 0"	9' - 1"	10' - 8"	9' - 2"
	4' - 8"	9' - 0"	10' - 1"	9' - 2"
	5' - 0"	8' - 7"	10' - 1"	9' - 2"
	5' - 4"	8' - 7"	10' - 1"	9' - 2"
	5' - 8"	8' - 5"	10' - 0"	9' - 1"
	6' - 0"	8' - 4"	9' - 9"	8' - 11"
±65.0	3' - 6"	9' - 1"	11' - 3"	9' - 2"
	4' - 0"	9' - 1"	10' - 1"	9' - 2"
	4' - 8"	8' - 7"	10' - 1"	9' - 2"
	5' - 0"	8' - 7"	10' - 1"	9' - 2"
	5' - 4"	8' - 5"	10' - 0"	9' - 0"
	5' - 8"	8' - 3"	9' - 6"	8' - 8"
	6' - 0"	8' - 1"	9' - 1"	8' - 2"
±70.0	3' - 6"	9' - 1"	10' - 5"	9' - 2"
	4' - 0"	9' - 0"	10' - 1"	9' - 2"
	4' - 8"	8' - 7"	10' - 1"	9' - 2"
	5' - 0"	8' - 5"	9' - 11"	9' - 0"
	5' - 4"	8' - 3"	9' - 6"	8' - 8"
	5' - 8"	8' - 0"	9' - 1"	8' - 0"
	6' - 0"	7' - 8"	9' - 1"	7' - 7"
±75.0	3' - 6"	8' - 7"	9' - 1"	-
	4' - 0"	8' - 7"	9' - 1"	-
	4' - 8"	8' - 4"	9' - 1"	-
	5' - 0"	8' - 2"	9' - 1"	-
	5' - 4"	8' - 0"	9' - 1"	-
	5' - 8"	7' - 6"	9' - 1"	-
	6' - 0"	7' - 2"	9' - 1"	-

L = STANDARD MULLION SPAN EFFECTIVE SPACING

$* \; b = \frac{S1+S2}{2}$ (SEE SCHEDULE)

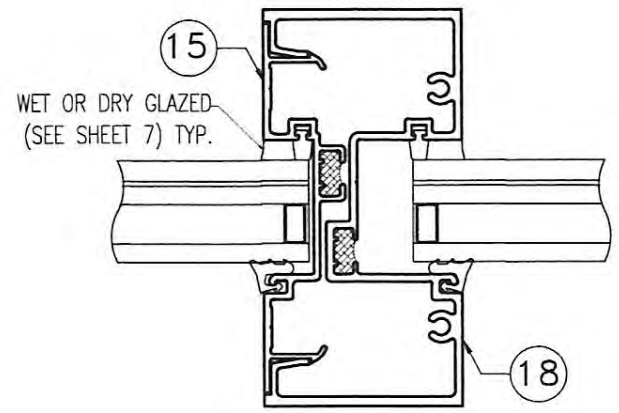

A	STANDARD LIGHT MULLION (15) + (18)	Ix= 6.942 in4 Sx= 2.773 in3

6 MULLION

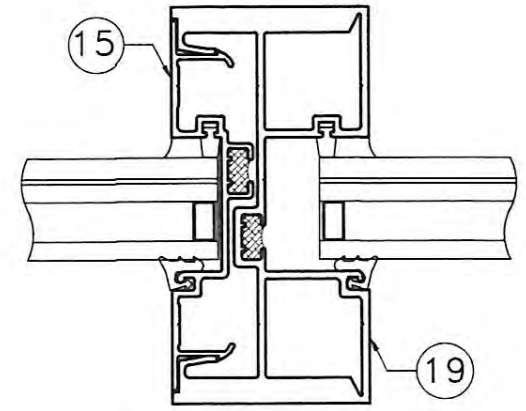

B	HEAVY MULLION (15) + (19)	Ix= 11.630 in4 Sx= 4.641 in3

9 MULLION

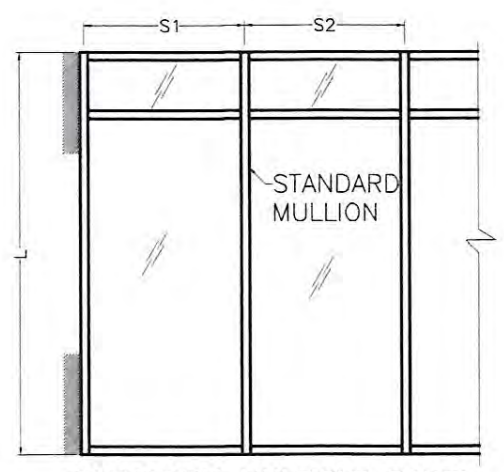

ELEVATION MULTIPLE PANEL

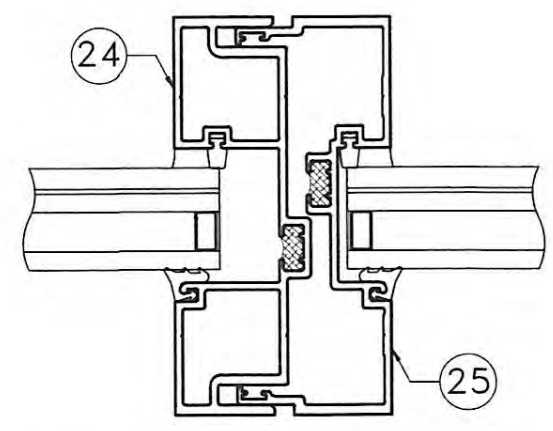

C	EXPANSION MULLION (24) + (25)	Ix= 8.550 in4 Sx= 3.408 in3 IN TERMS OF ALUM

12 MULLION

TEXAS DEPARTMENT OF INSURANCE – 2006

SERIES FG-5100T
HURRICANE RESISTANT
THERMAL STOREFRONT SYSTEM

DRAWN BY: F.R.L
DATE 2/3/17

Oldcastle BuildingEnvelope
803 AIRPORT RD. TERRELL TX 75160
www.OldcastleBE.com • Phone 800-869-4567

17-011
DRAWING No

SHEET 9 OF 28

REV. No	DESCRIPTION	DATE
1		
2		
3		
4		

WALTER A. TILLIT Jr P.E.
PROFESSIONAL ENGINEER
6355 N.W 36 STREET, STE. 305
VIRGINIA GARDENS, FL 33166
PHONE(305) 871-1530 FAX (305) 871-1531
TEXAS LIC. # 90691
FIRM REGISTRATION # F-13790

P.E. SEAL/SIGNATURE/DATE

MAXIMUM JAMB MULLION SPAN "L"(ft) SCHEDULE FOR A GIVEN DESIGN PRESSURE RATING (psf) AND A GIVEN EFFECTIVE SPACING "b" (ft–in) **

MAXIMUM DESIGN PRESSURE RAITING W(PSF)	EFFECTIVE SPACING "b" (Ft-in)	(D) SPAN L (Ft-in)	(E) SPAN L (Ft-in)	(F) SPAN L (Ft-in)	(G) SPAN L (Ft-in)
±50.0	1' - 10"	9' - 2"	9' - 2"	12' - 2"	12' - 2"
	2' - 0"	9' - 2"	9' - 2"	12' - 2"	12' - 2"
	2' - 4"	9' - 2"	9' - 2"	11' - 1"	11' - 1"
	2' - 6"	9' - 2"	9' - 2"	10' - 3"	10' - 3"
	2' - 8"	9' - 2"	9' - 2"	10' - 1"	10' - 1"
	2' - 10"	9' - 2"	9' - 2"	10' - 1"	10' - 1"
	3' - 0"	9' - 2"	9' - 2"	10' - 1"	10' - 1"
±55.0	1' - 10"	9' - 2"	9' - 2"	12' - 2"	12' - 2"
	2' - 0"	9' - 2"	9' - 2"	11' - 7"	11' - 7"
	2' - 4"	9' - 2"	9' - 2"	10' - 1"	10' - 1"
	2' - 6"	9' - 2"	9' - 2"	10' - 1"	10' - 1"
	2' - 8"	9' - 2"	9' - 2"	10' - 1"	10' - 1"
	2' - 10"	9' - 2"	9' - 2"	10' - 1"	10' - 1"
	3' - 0"	9' - 2"	9' - 2"	10' - 1"	10' - 1"
±60.0	1' - 10"	9' - 2"	9' - 2"	11' - 10"	11' - 10"
	2' - 0"	9' - 2"	9' - 2"	10' - 8"	10' - 8"
	2' - 4"	9' - 2"	9' - 2"	10' - 1"	10' - 1"
	2' - 6"	9' - 2"	9' - 2"	10' - 1"	10' - 1"
	2' - 8"	9' - 2"	9' - 2"	10' - 1"	10' - 1"
	2' - 10"	9' - 2"	9' - 2"	10' - 1"	10' - 1"
	3' - 0"	8' - 11"	8' - 11"	9' - 9"	9' - 9"
±65.0	1' - 10"	9' - 2"	9' - 2"	10' - 11"	10' - 11"
	2' - 0"	9' - 2"	9' - 2"	10' - 1"	10' - 1"
	2' - 4"	9' - 2"	9' - 2"	10' - 1"	10' - 1"
	2' - 6"	9' - 2"	9' - 2"	10' - 1"	10' - 1"
	2' - 8"	9' - 2"	9' - 2"	10' - 0"	10' - 0"
	2' - 10"	8' - 10"	8' - 10"	9' - 8"	9' - 8"
	3' - 0"	8' - 3"	8' - 3"	9' - 1"	9' - 0"
±70.0	1' - 10"	9' - 2"	9' - 2"	10' - 2"	10' - 2"
	2' - 0"	9' - 2"	9' - 2"	10' - 1"	10' - 1"
	2' - 4"	9' - 2"	9' - 2"	10' - 1"	10' - 1"
	2' - 6"	9' - 2"	9' - 2"	10' - 1"	10' - 1"
	2' - 8"	8' - 6"	8' - 6"	9' - 4"	9' - 4"
	2' - 10"	8' - 2"	8' - 2"	9' - 1"	9' - 1"
	3' - 0"	7' - 8"	7' - 8"	9' - 1"	9' - 1"
±75.0	1' - 10"	8' - 7"	8' - 7"	9' - 1"	9' - 1"
	2' - 0"	8' - 7"	8' - 7"	9' - 1"	9' - 1"
	2' - 4"	8' - 7"	8' - 7"	9' - 1"	9' - 1"
	2' - 6"	8' - 7"	8' - 7"	9' - 1"	9' - 1"
	2' - 8"	7' - 11"	7' - 11"	9' - 1"	9' - 1"
	2' - 10"	7' - 8"	7' - 8"	9' - 1"	9' - 1"
	3' - 0"	7' - 2"	7' - 2"	9' - 1"	9' - 1"

L = JAMB MULLION SPAN
EFFECTIVE SPACING
$**b = \frac{S1}{2}$ (SEE SCHEDULE)

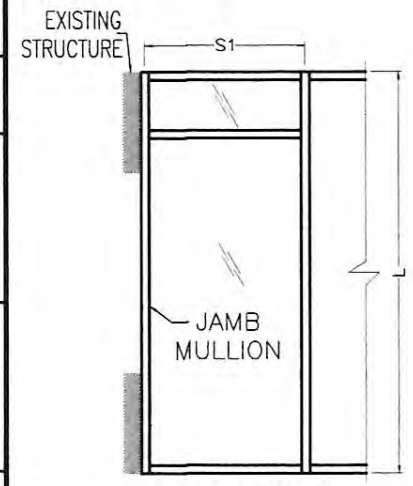

ELEVATION MULTIPLE PANEL

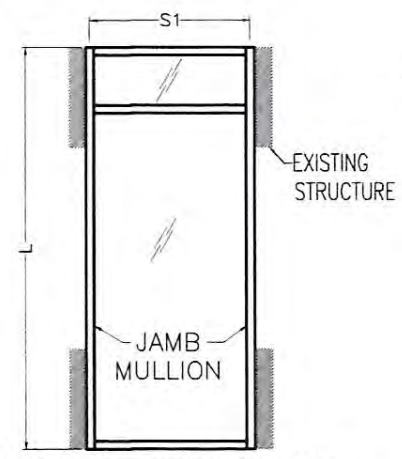

ELEVATION SINGLE PANEL

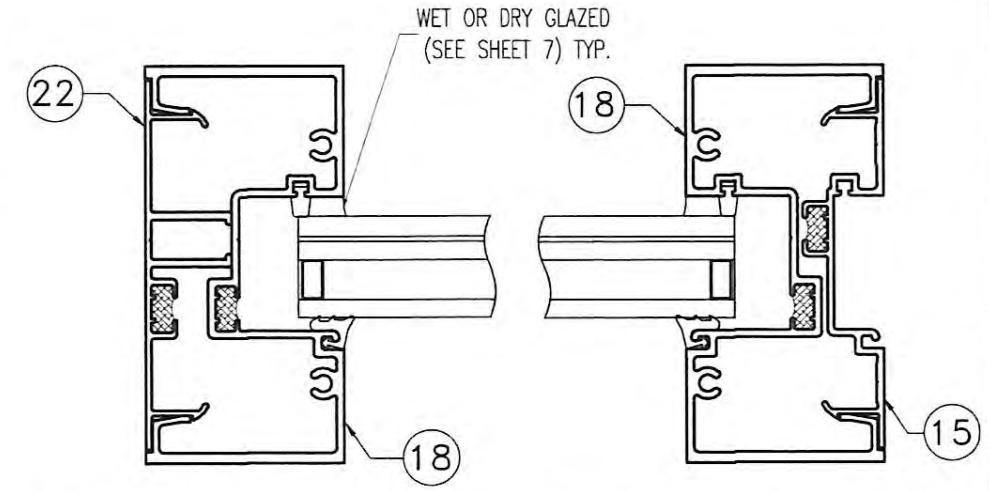

D	TYPICAL LIGHT JAMB MULLION (22) + (18)	Ix= 6.769 in4 Sx= 2.704 in3

7A / JAMB

E	ALTERNATE LIGHT JAMB MULLION (18) + (15)	Ix= 6.942 in4 Sx= 2.773 in3

7 / JAMB

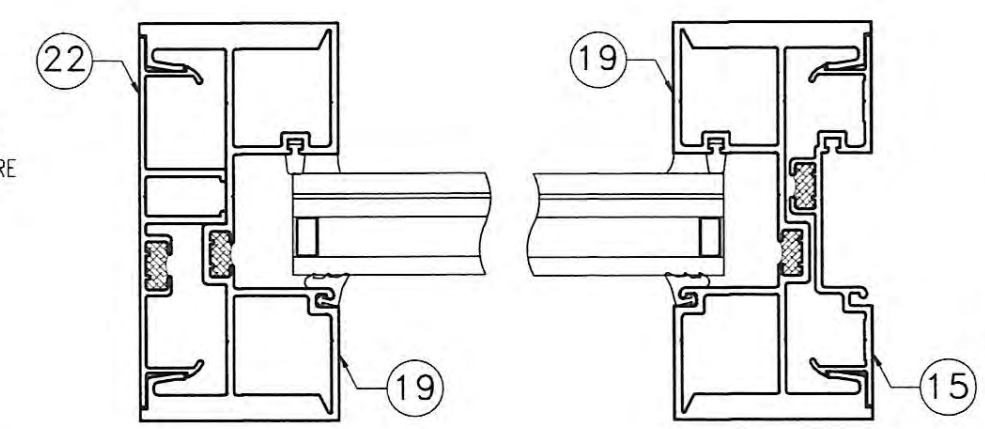

F	HEAVY JAMB MULLION (22) + (19)	Ix= 11.457 in4 Sx= 4.58 in3

9B / JAMB

G	ALTERNATIVE HEAVY MULLION (22) + (15)	Ix= 11.629 in4 Sx= 4.641 in3

9A / JAMB

TEXAS DEPARTMENT OF INSURANCE – 2006

SERIES FG-5100T
HURRICANE RESISTANT
THERMAL STOREFRONT SYSTEM

DRAWN BY: F.R.L.
DATE 2/3/17
DRAWING No 17-011
SHEET 10 OF 28

OldcastleBuildingEnvelope
803 AIRPORT RD. TERRELL TX 75160
www.OldcastleBE.com-Phone 800-869-4567

REV. No.	DATE	DESCRIPTION	REV. No.	DATE	DESCRIPTION
1			3		
2			4		

WALTER A. TILLIT Jr P.E.
PROFESSIONAL ENGINEER
6355 N.W 36 STREET, STE. 305
VIRGINIA GARDENS, FL 33166
PHONE(305) 871-1530 FAX (305) 871-1531
TEXAS LIC. # 90691
FIRM REGISTRATION # F-13790

11/6/17

P.E. SEAL/SIGNATURE/DATE

MAXIMUM MULLION SPAN "L"(ft) SCHEDULE FOR A GIVEN DESIGN PRESSURE RATING (psf) AND A GIVEN EFFECTIVE SPACING "b" (ft–in) *

MAXIMUM DESIGN PRESSURE RAITING W(PSF)	EFFECTIVE SPACING "b" (Ft-in)	(H) SPAN L (Ft-in)	(I) SPAN L (Ft-in)
±50.0	3' - 6"	8' - 7"	9' - 2"
	4' - 0"	8' - 7"	9' - 2"
	4' - 8"	8' - 7"	9' - 2"
	5' - 0"	8' - 7"	9' - 2"
	5' - 4"	8' - 7"	9' - 2"
	5' - 8"	8' - 7"	9' - 2"
	6' - 0"	8' - 7"	9' - 2"
±55.0	3' - 6"	8' - 7"	9' - 2"
	4' - 0"	8' - 7"	9' - 2"
	4' - 8"	8' - 7"	9' - 2"
	5' - 0"	8' - 7"	9' - 2"
	5' - 4"	8' - 7"	9' - 2"
	5' - 8"	8' - 7"	9' - 2"
	6' - 0"	8' - 7"	9' - 2"
±60.0	3' - 6"	8' - 7"	9' - 2"
	4' - 0"	8' - 7"	9' - 2"
	4' - 8"	8' - 7"	9' - 2"
	5' - 0"	8' - 7"	9' - 2"
	5' - 4"	8' - 7"	9' - 2"
	5' - 8"	8' - 7"	9' - 2"
	6' - 0"	8' - 7"	8' - 11"
±65.0	3' - 6"	8' - 7"	9' - 2"
	4' - 0"	8' - 7"	9' - 2"
	4' - 8"	8' - 7"	9' - 2"
	5' - 0"	8' - 7"	9' - 2"
	5' - 4"	8' - 7"	9' - 2"
	5' - 8"	8' - 7"	8' - 8"
	6' - 0"	8' - 3"	8' - 2"
±70.0	3' - 6"	8' - 7"	9' - 2"
	4' - 0"	8' - 7"	9' - 2"
	4' - 8"	8' - 7"	9' - 2"
	5' - 0"	8' - 7"	9' - 2"
	5' - 4"	8' - 7"	8' - 8"
	5' - 8"	8' - 1"	8' - 0"
	6' - 0"	7' - 8"	7' - 7"
±75.0	3' - 6"	8' - 7"	-
	4' - 0"	8' - 7"	-
	4' - 8"	8' - 7"	-
	5' - 0"	8' - 7"	-
	5' - 4"	8' - 1"	-
	5' - 8"	7' - 7"	-
	6' - 0"	7' - 2"	-

MAXIMUM DESIGN PRESSURE RAITING W(PSF)	EFFECTIVE SPACING "b" (Ft-in)	(J) SPAN L (Ft-in)
±50.0	3' - 6"	12' - 2"
	4' - 0"	12' - 2"
	4' - 8"	12' - 2"
	5' - 0"	12' - 2"
	5' - 4"	12' - 2"
	5' - 8"	12' - 2"
	6' - 0"	12' - 2"
	6' - 4"	12' - 2"
	6' - 8"	12' - 2"
	7' - 0"	12' - 2"
±55.0	3' - 6"	12' - 2"
	4' - 0"	12' - 2"
	4' - 8"	12' - 2"
	5' - 0"	12' - 2"
	5' - 4"	12' - 2"
	5' - 8"	12' - 2"
	6' - 0"	12' - 2"
	6' - 4"	12' - 2"
	6' - 8"	12' - 2"
	7' - 0"	12' - 2"
±60.0	3' - 6"	12' - 2"
	4' - 0"	12' - 2"
	4' - 8"	12' - 2"
	5' - 0"	12' - 2"
	5' - 4"	12' - 2"
	5' - 8"	12' - 2"
	6' - 0"	12' - 2"
	6' - 4"	12' - 2"
	6' - 8"	11' - 11"
	7' - 0"	11' - 4"
±65.0	3' - 6"	12' - 2"
	4' - 0"	12' - 2"
	4' - 8"	12' - 2"
	5' - 0"	12' - 2"
	5' - 4"	12' - 2"
	5' - 8"	12' - 2"
	6' - 0"	12' - 2"
	6' - 4"	11' - 7"
	6' - 8"	11' - 0"
	7' - 0"	10' - 6"
±70.0	3' - 6"	12' - 2"
	4' - 0"	12' - 2"
	4' - 8"	12' - 2"
	5' - 0"	12' - 2"
	5' - 4"	12' - 2"
	5' - 8"	12' - 0"
	6' - 0"	11' - 4"
	6' - 4"	10' - 9"
	6' - 8"	10' - 3"
	7' - 0"	9' - 9"

L = STANDARD MULLION
*SPAN EFFECTIVE SPACING
b = $\frac{S1+S2}{2}$ (SEE SCHEDULE)

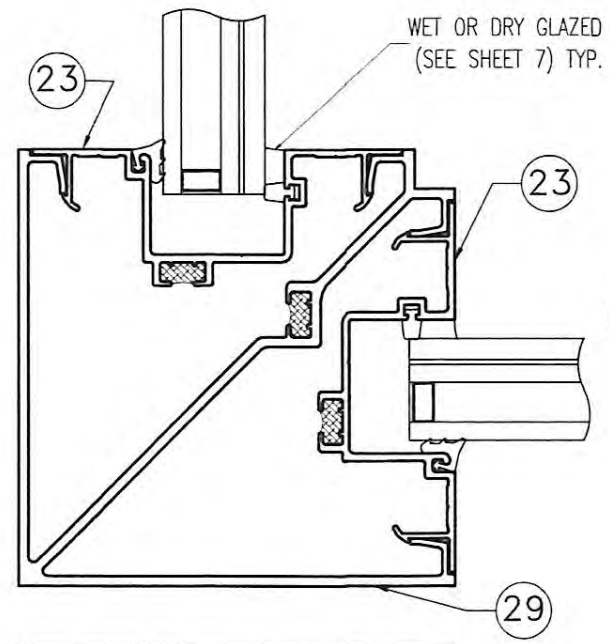

H	90 DEGREE CORNER MULLION (23) + (29)	Ix= 17.201 in4 Sx= 4.33 in3

10 MULLION

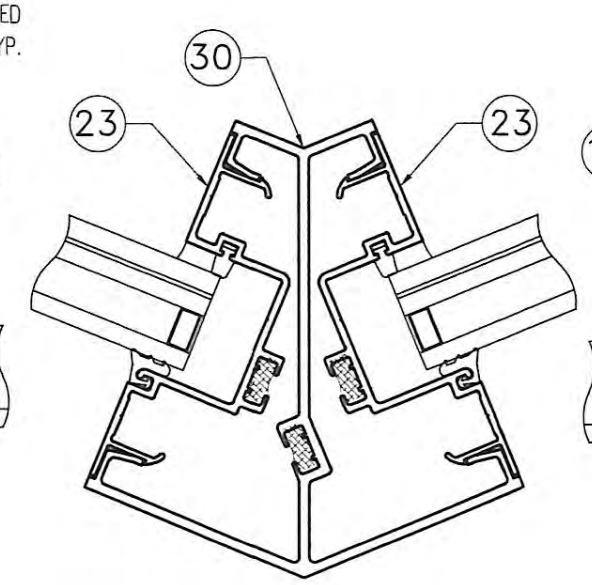

I	135 DEGREE CORNER MULLION (23) + (30)	Ix= 10.552 in4 Sx= 3.457 in3

11 MULLION

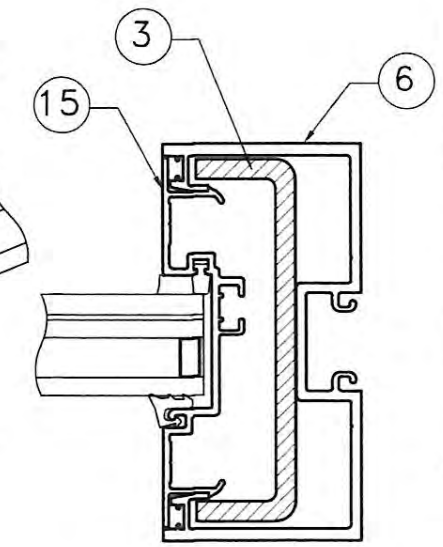

J	DOOR JAMB MULLION (3) + (6) + (15)	Ix= 19.935 in4 Sx= 7.903 in3 IN TERMS OF ALUM.

15 JAMB

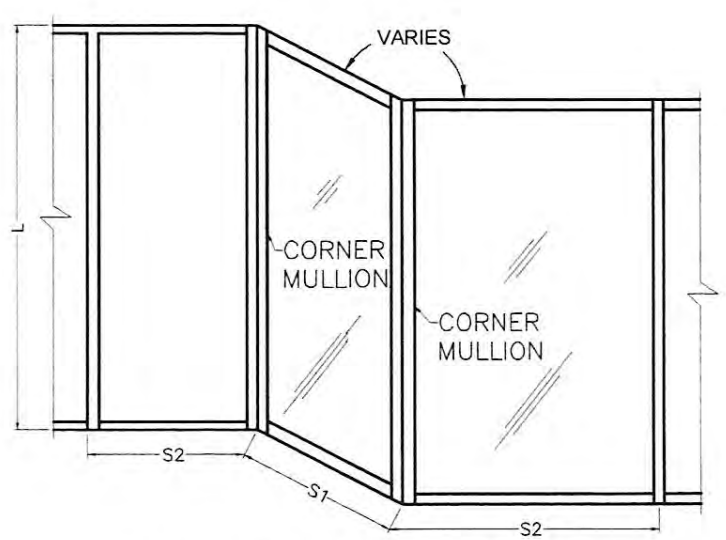

CORNER ELEVATION WITHOUT INTERMEDIATE HORIZONTALS

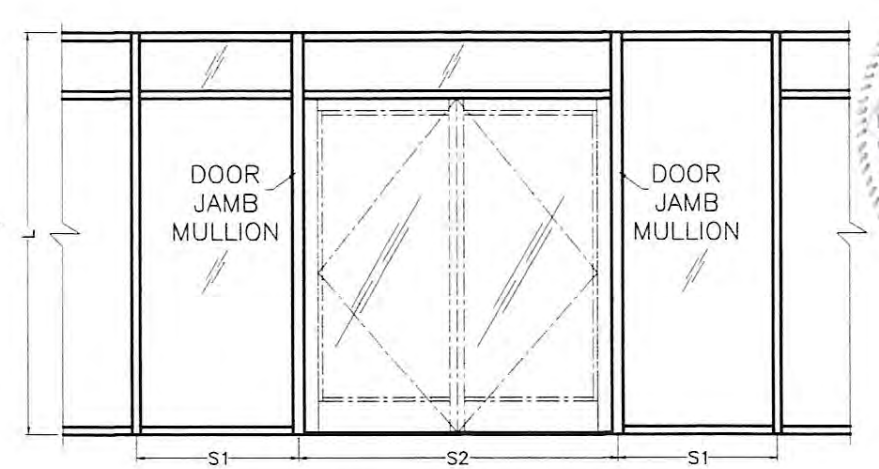

TYPICAL ELEVATION DOOR JAMB MULLIONS

TEXAS DEPARTMENT OF INSURANCE – 2006

SERIES FG-5100T
HURRICANE RESISTANT
THERMAL STOREFRONT SYSTEM

Oldcastle BuildingEnvelope™
803 AIRPORT RD. TERRELL TX 75160
www.OldcastleBE.com-Phone 800-869-4567

REV. No	DATE	DESCRIPTION	REV. No	DATE	DESCRIPTION
1			3		
2			4		

DRAWN BY: F.R.L 2/3/17
DATE
17-011
DRAWING No
SHEET 11 OF 28

WALTER A. TILLIT Jr P.E.
PROFESSIONAL ENGINEER
6355 N.W 36 STREET, STE. 305
VIRGINIA GARDENS, FL 33166
PHONE(305) 871-1531 FAX (305) 871-1530
TEXAS LIC. # 90691
FIRM REGISTRATION # F-13790

STATE OF TEXAS
WALTER A. TILLIT
90691
LICENSED PROFESSIONAL ENGINEER
11/16/17
P.E. SEAL/SIGNATURE/DATE

MAXIMUM DESIGN PRESSURE RATING FOR HORIZONTAL

MAXIMUM HORIZONTAL SPAN "L"(ft) SCHEDULE FOR A GIVEN DESIGN PRESSURE RATING (psf) AND A GIVEN HORIZONTAL EFFECTIVE DAY LIGHT OPENING "D.L.O." (ft–in)

MAXIMUM DESIGN PRESSURE RAITING W(PSF)	EFFECTIVE DAY LIGHT OPENING "D.L.O."(Ft-in)	(K) MAX. HORIZONTAL SPAN * "L" (Ft-in)
±50.0	3' - 0"	8' - 2"
	3' - 6"	8' - 2"
	4' - 0"	8' - 2"
	4' - 6"	8' - 2"
	5' - 0"	8' - 2"
	5' - 6"	8' - 2"
	6' - 0"	8' - 2"
±55.0	3' - 0"	8' - 2"
	3' - 6"	8' - 2"
	4' - 0"	8' - 2"
	4' - 6"	8' - 2"
	5' - 0"	8' - 2"
	5' - 6"	8' - 2"
	6' - 0"	8' - 2"
±60.0	3' - 0"	8' - 2"
	3' - 6"	8' - 2"
	4' - 0"	8' - 2"
	4' - 6"	8' - 2"
	5' - 0"	8' - 2"
	5' - 6"	8' - 2"
	6' - 0"	7' - 11"
±65.0	3' - 0"	8' - 2"
	3' - 6"	8' - 2"
	4' - 0"	8' - 2"
	4' - 6"	8' - 2"
	5' - 0"	8' - 2"
	5' - 6"	7' - 11"
	6' - 0"	7' - 8"
±70.0	3' - 0"	8' - 2"
	3' - 6"	8' - 2"
	4' - 0"	8' - 2"
	4' - 6"	8' - 2"
	5' - 0"	8' - 0"
	5' - 6"	7' - 9"
	6' - 0"	7' - 6"
±75.0	3' - 0"	8' - 2"
	3' - 6"	8' - 2"
	4' - 0"	8' - 2"
	4' - 6"	8' - 1"
	5' - 0"	7' - 10"
	5' - 6"	7' - 7"
	6' - 0"	7' - 4"

* MAX. HORIZONTAL SPAN AT PANEL AREAS DIFFERENT THAN TRANSOM SHALL NOT EXCEED 6'-0"

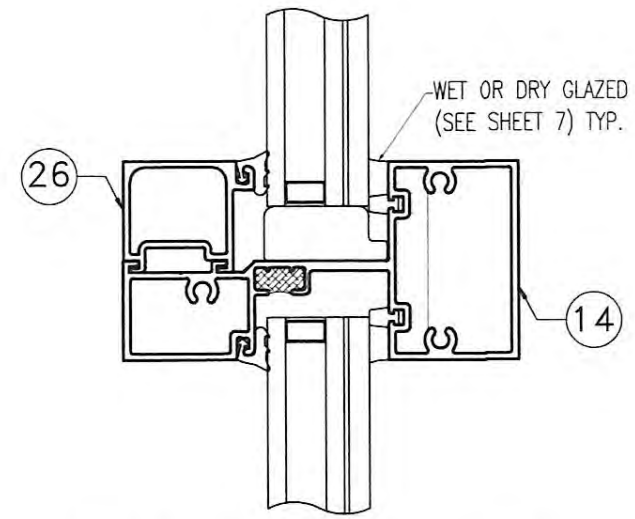

K	HORIZONTAL MULLION (26) + (14)	Iy= 5.994 in4 Sy= 2.258 in3

11
MULLION

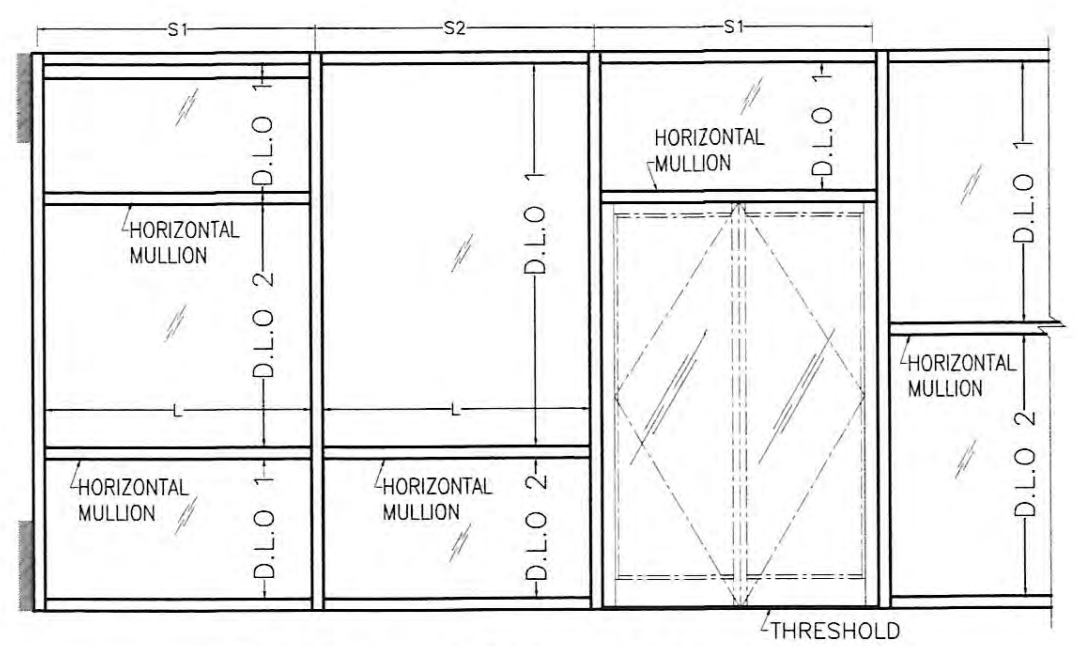

WINDOW WALL ELEVATION W/ HORIZONTAL

"L" = MAXIMUM HORIZONTAL SPAN

"D.L.O." = EFFECTIVE DAY LIGHT OPENING FOR HORIZONTAL = $\frac{D.L.O._1 + D.L.O._2}{2}$

TEXAS DEPARTMENT OF INSURANCE – 2006

SERIES FG-5100T
HURRICANE RESISTANT
THERMAL STOREFRONT SYSTEM

OldcastleBuildingEnvelope
803 AIRPORT RD. TERRELL TX 75160
www.OldcastleBE.com Phone 800-869-4567

DRAWN BY: F.R.L
DATE 2/3/17
DRAWING No 17-011
SHEET 12 OF 28

REV. No	DATE	DESCRIPTION
1		
2		
3		
4		

WALTER A. TILLIT Jr P.E.
PROFESSIONAL ENGINEER
6355 N.W 36 STREET, STE. 305
VIRGINIA GARDENS, FL 33166
PHONE(305) 871-1531 FAX (305) 871-1530
TEXAS LIC. # 90691
FIRM REGISTRATION # F-13790

STATE OF TEXAS
WALTER A. TILLIT JR.
90691
LICENSED
PROFESSIONAL ENGINEER
11/6/17

P.E. SEAL/SIGNATURE/DATE

MAXIMUM DESIGN PRESSURE RATING FOR STANDARD, JAMB & CORNER MULLION CONNECTIONS △

MAXIMUM MULLION SPAN	EFFECTIVE SPACING	POURED CONCRETE (Min. f'c= 3ksi) SUBSTRATE — FASTENERS TYPES ■												GROUT FILLED CONCRETE BLOCK SUBSTRATE — FASTENERS ■	1/4" Min. THK. ASTM A-36 STEEL SUBS. — FASTENERS ■	DOUBLE BUCK 3" Min.THK. (G=0.55) WOOD SUBSTRATE — FASTENERS ■	
		C		F		H		L		O		Q		S	V	W	
"L" (Ft-in)	"b" (Ft-in)	(2 ANC.)	(4 ANC.)	(2 ANC.)	(4 ANC.)	(2 ANC.)	(4 ANC.)	(2 ANC.)	(4 ANC.)	(2 ANC.)	(4 ANC.)	(2 ANC.)	(4 ANC.)	(6 ANC.)	(4 ANC.)	(6 ANC.)	(8 ANC.)
6' - 0"	3' - 6"	75.0	75.0	72.0	75.0	75.0	75.0	75.0	75.0	75.0	75.0	75.0	75.0	75.0	75.0	75.0	75.0
	4' - 0"	75.0	75.0	63.0	75.0	75.0	75.0	75.0	75.0	75.0	75.0	75.0	75.0	75.0	75.0	75.0	75.0
	4' - 8"	71.4	75.0	54.0	75.0	75.0	75.0	75.0	75.0	75.0	75.0	75.0	75.0	75.0	75.0	75.0	75.0
	5' - 0"	66.7	75.0	50.4	75.0	75.0	75.0	75.0	75.0	75.0	75.0	75.0	75.0	70.0	75.0	75.0	75.0
	5' - 4"	62.5	75.0	47.3	75.0	72.5	75.0	75.0	75.0	75.0	75.0	75.0	75.0	65.6	75.0	75.0	75.0
	5' - 8"	58.8	75.0	44.5	75.0	68.2	75.0	75.0	75.0	75.0	75.0	75.0	75.0	61.8	75.0	75.0	75.0
	6' - 0"	55.6	75.0	42.0	75.0	64.4	75.0	75.0	75.0	75.0	75.0	75.0	75.0	58.3	75.0	70.8	75.0
6' - 6"	3' - 6"	75.0	75.0	66.5	75.0	75.0	75.0	75.0	75.0	75.0	75.0	75.0	75.0	75.0	75.0	75.0	75.0
	4' - 0"	75.0	75.0	58.2	75.0	75.0	75.0	75.0	75.0	75.0	75.0	75.0	75.0	75.0	75.0	75.0	75.0
	4' - 8"	65.9	75.0	49.8	75.0	75.0	75.0	75.0	75.0	75.0	75.0	75.0	75.0	69.2	75.0	75.0	75.0
	5' - 0"	61.5	75.0	46.5	75.0	71.4	75.0	75.0	75.0	75.0	75.0	75.0	75.0	64.6	75.0	75.0	75.0
	5' - 4"	57.7	75.0	43.6	75.0	66.9	75.0	75.0	75.0	75.0	75.0	75.0	75.0	60.6	75.0	73.5	75.0
	5' - 8"	54.3	75.0	41.0	75.0	63.0	75.0	75.0	75.0	75.0	75.0	75.0	75.0	57.0	75.0	69.2	75.0
	6' - 0"	51.3	75.0	38.8	75.0	59.5	75.0	75.0	75.0	75.0	75.0	75.0	75.0	53.8	75.0	65.4	75.0
7' - 0"	3' - 6"	75.0	75.0	61.7	75.0	75.0	75.0	75.0	75.0	75.0	75.0	75.0	75.0	75.0	75.0	75.0	75.0
	4' - 0"	71.4	75.0	54.0	75.0	75.0	75.0	75.0	75.0	75.0	75.0	75.0	75.0	75.0	75.0	75.0	75.0
	4' - 8"	61.2	75.0	46.3	75.0	71.0	75.0	75.0	75.0	75.0	75.0	75.0	75.0	64.3	75.0	75.0	75.0
	5' - 0"	57.1	75.0	43.2	75.0	66.3	75.0	75.0	75.0	75.0	75.0	75.0	75.0	60.0	75.0	72.8	75.0
	5' - 4"	53.6	75.0	40.5	75.0	62.1	75.0	75.0	75.0	75.0	75.0	75.0	75.0	56.3	75.0	68.3	75.0
	5' - 8"	50.4	75.0	38.1	75.0	58.5	75.0	75.0	75.0	75.0	75.0	75.0	75.0	52.9	75.0	64.3	75.0
	6' - 0"	47.6	75.0	36.0	72.0	55.2	75.0	75.0	75.0	75.0	75.0	73.0	75.0	50.0	75.0	60.7	75.0
7' - 6"	3' - 6"	75.0	75.0	57.6	75.0	75.0	75.0	75.0	75.0	75.0	75.0	75.0	75.0	75.0	75.0	75.0	75.0
	4' - 0"	66.7	75.0	50.4	75.0	75.0	75.0	75.0	75.0	75.0	75.0	75.0	75.0	70.0	75.0	75.0	75.0
	4' - 8"	57.1	75.0	43.2	75.0	66.3	75.0	75.0	75.0	75.0	75.0	75.0	75.0	60.0	75.0	72.8	75.0
	5' - 0"	53.3	75.0	40.3	75.0	61.9	75.0	75.0	75.0	75.0	75.0	75.0	75.0	56.0	75.0	68.0	75.0
	5' - 4"	50.0	75.0	37.8	75.0	58.0	75.0	75.0	75.0	75.0	75.0	75.0	75.0	52.5	75.0	63.7	75.0
	5' - 8"	47.1	75.0	35.6	71.1	54.6	75.0	75.0	75.0	75.0	75.0	72.1	75.0	49.4	75.0	60.0	75.0
	6' - 0"	44.4	75.0	33.6	67.2	51.6	75.0	75.0	75.0	75.0	75.0	68.1	75.0	46.7	75.0	56.0	75.0
8' - 0"	3' - 6"	71.4	75.0	54.0	75.0	75.0	75.0	75.0	75.0	75.0	75.0	75.0	75.0	75.0	75.0	75.0	75.0
	4' - 0"	62.5	75.0	47.3	75.0	72.5	75.0	75.0	75.0	75.0	75.0	75.0	75.0	65.6	75.0	75.0	75.0
	4' - 8"	53.6	75.0	40.5	75.0	62.1	75.0	75.0	75.0	75.0	75.0	75.0	75.0	56.2	75.0	68.3	75.0
	5' - 0"	50.0	75.0	37.8	75.0	58.0	75.0	75.0	75.0	75.0	75.0	75.0	75.0	52.5	75.0	63.7	75.0
	5' - 4"	46.9	75.0	35.4	70.9	54.4	75.0	75.0	75.0	75.0	75.0	71.8	75.0	49.2	75.0	59.8	75.0
	5' - 8"	44.1	75.0	33.4	66.7	51.2	75.0	75.0	75.0	75.0	75.0	67.6	75.0	46.3	75.0	56.2	75.0
	6' - 0"	41.7	75.0	31.5	63.0	48.3	75.0	75.0	75.0	75.0	75.0	63.8	75.0	43.8	75.0	53.1	70.8
8' - 6"	3' - 6"	67.2	75.0	50.8	75.0	75.0	75.0	75.0	75.0	75.0	75.0	75.0	75.0	70.6	75.0	75.0	75.0
	4' - 0"	58.8	75.0	44.5	75.0	68.2	75.0	75.0	75.0	75.0	75.0	75.0	75.0	61.8	75.0	75.0	75.0
	4' - 8"	50.4	75.0	38.1	75.0	58.5	75.0	75.0	75.0	75.0	75.0	75.0	75.0	52.9	75.0	64.3	75.0
	5' - 0"	47.1	75.0	35.6	71.2	54.6	75.0	75.0	75.0	75.0	75.0	72.1	75.0	49.4	75.0	60.0	75.0
	5' - 4"	44.1	75.0	33.4	66.7	51.2	75.0	75.0	75.0	75.0	75.0	67.6	75.0	46.3	75.0	56.2	75.0
	5' - 8"	41.5	75.0	31.4	62.8	48.2	75.0	74.9	75.0	74.9	75.0	63.6	75.0	43.6	75.0	52.9	70.6
	6' - 0"	39.2	75.0	29.6	59.3	45.5	75.0	70.7	75.0	70.7	75.0	60.1	75.0	41.2	75.0	50.0	66.6
9' - 0"	3' - 6"	63.5	75.0	48.0	75.0	73.7	75.0	75.0	75.0	75.0	75.0	75.0	75.0	66.7	75.0	75.0	75.0
	4' - 0"	55.6	75.0	42.0	75.0	64.4	75.0	75.0	75.0	75.0	75.0	75.0	75.0	58.3	75.0	70.8	75.0
	4' - 8"	47.6	75.0	36.0	72.0	55.2	75.0	75.0	75.0	75.0	75.0	72.9	75.0	50.0	75.0	60.7	75.0
	5' - 0"	44.4	75.0	33.6	67.2	51.6	75.0	75.0	75.0	75.0	75.0	68.1	75.0	46.7	75.0	56.7	75.0
	5' - 4"	41.7	75.0	31.5	63.0	48.3	75.0	75.0	75.0	75.0	75.0	63.8	75.0	43.8	75.0	53.1	70.8
	5' - 8"	39.2	75.0	29.6	59.3	45.5	75.0	70.7	75.0	70.7	75.0	60.1	75.0	41.2	75.0	50.0	66.6
	6' - 0"	37.0	74.1	28.0	56.0	43.0	75.0	66.8	75.0	66.8	75.0	56.7	75.0	38.9	75.0	47.2	62.9
9' - 6"	3' - 6"	60.2	75.0	45.5	75.0	69.8	75.0	75.0	75.0	75.0	75.0	75.0	75.0	63.2	75.0	75.0	75.0
	4' - 0"	52.6	75.0	39.8	75.0	61.1	75.0	75.0	75.0	75.0	75.0	75.0	75.0	55.3	75.0	67.1	75.0
	4' - 8"	45.1	75.0	34.1	68.2	52.3	75.0	75.0	75.0	75.0	75.0	69.1	75.0	47.4	75.0	57.5	75.0
	5' - 0"	42.1	75.0	31.8	63.7	48.8	75.0	75.0	75.0	75.0	75.0	64.5	75.0	44.2	75.0	53.7	71.6
	5' - 4"	39.5	75.0	29.8	59.7	45.8	75.0	71.2	75.0	71.2	75.0	60.5	75.0	41.4	75.0	50.3	67.1
	5' - 8"	37.1	74.3	28.1	56.2	43.1	75.0	67.0	75.0	67.0	75.0	56.9	75.0	39.0	75.0	47.4	63.1
	6' - 0"	35.1	70.2	26.5	53.1	40.7	75.0	63.3	75.0	63.3	75.0	53.8	75.0	36.8	75.0	44.7	59.6
10' - 0"	3' - 6"	57.1	75.0	43.2	75.0	66.3	75.0	75.0	75.0	75.0	75.0	75.0	75.0	60.0	75.0	72.8	75.0
	4' - 0"	50.0	75.0	37.8	75.0	58.0	75.0	75.0	75.0	75.0	75.0	75.0	75.0	52.5	75.0	63.7	75.0
	4' - 8"	42.9	75.0	32.4	64.8	49.7	75.0	75.0	75.0	75.0	75.0	65.7	75.0	45.0	75.0	54.6	72.8
	5' - 0"	40.0	75.0	30.2	60.5	46.4	75.0	72.2	75.0	72.2	75.0	61.3	75.0	42.0	75.0	51.0	68.0
	5' - 4"	37.5	75.0	28.4	56.7	43.5	75.0	67.7	75.0	67.7	75.0	57.5	75.0	39.4	75.0	47.8	63.7
	5' - 8"	35.3	70.6	26.7	53.4	40.9	75.0	63.7	75.0	63.7	75.0	54.1	75.0	37.1	75.0	45.0	60.0
	6' - 0"	33.3	66.7	25.2	50.4	38.7	75.0	60.1	75.0	60.1	75.0	51.1	75.0	35.0	75.0	42.5	56.7
10' - 6"	3' - 6"	54.4	75.0	41.1	75.0	63.1	75.0	75.0	75.0	75.0	75.0	75.0	75.0	57.1	75.0	69.4	75.0
	4' - 0"	47.6	75.0	36.0	72.0	55.2	75.0	75.0	75.0	75.0	75.0	73.0	75.0	50.0	75.0	60.7	75.0
	4' - 8"	40.8	75.0	30.9	61.7	47.3	75.0	73.6	75.0	73.6	75.0	62.5	75.0	42.9	75.0	52.0	69.4
	5' - 0"	38.1	75.0	28.8	57.6	44.2	75.0	68.7	75.0	68.7	75.0	58.4	75.0	40.0	75.0	48.6	64.7
	5' - 4"	35.7	71.4	27.0	54.0	41.4	75.0	64.4	75.0	64.4	75.0	54.7	75.0	37.5	75.0	45.5	60.7
	5' - 8"	33.6	67.2	25.4	50.8	39.0	75.0	60.6	75.0	60.6	75.0	51.5	75.0	35.3	75.0	42.8	57.1
	6' - 0"	31.7	63.5	24.0	48.0	36.8	73.7	57.3	75.0	57.3	75.0	48.6	75.0	33.3	75.0	40.5	54.0
11' - 0"	3' - 6"	51.9	75.0	39.3	75.0	60.3	75.0	75.0	75.0	75.0	75.0	75.0	75.0	54.5	75.0	66.2	75.0
	4' - 0"	45.5	75.0	34.4	68.7	52.7	75.0	75.0	75.0	75.0	75.0	69.6	75.0	47.7	75.0	57.9	75.0
	4' - 8"	39.0	75.0	29.5	58.9	45.2	75.0	70.3	75.0	70.3	75.0	59.7	75.0	40.9	75.0	49.7	66.2
	5' - 0"	36.4	72.7	27.5	55.0	42.2	75.0	65.6	75.0	65.6	75.0	55.7	75.0	38.2	75.0	46.4	61.8
	5' - 4"	34.1	68.2	25.8	51.5	39.5	75.0	61.5	75.0	61.5	75.0	52.2	75.0	35.8	75.0	43.5	57.9
	5' - 8"	32.1	64.2	24.3	48.5	37.2	74.4	57.9	75.0	57.9	75.0	49.2	75.0	33.7	75.0	40.9	54.5
	6' - 0"	30.3	60.6	22.9	45.8	35.2	70.3	54.7	75.0	54.7	75.0	46.4	75.0	31.8	75.0	38.6	51.5
11' - 6"	3' - 6"	49.7	75.0	37.6	75.0	57.6	75.0	75.0	75.0	75.0	75.0	75.0	75.0	52.2	75.0	63.3	75.0
	4' - 0"	43.5	75.0	32.9	65.7	50.4	75.0	75.0	75.0	75.0	75.0	66.6	75.0	45.7	75.0	55.4	73.9
	4' - 8"	37.3	74.5	28.2	56.3	43.2	75.0	67.2	75.0	67.2	75.0	57.1	75.0	39.1	75.0	47.5	63.3
	5' - 0"	34.8	69.6	26.3	52.6	40.3	75.0	62.7	75.0	62.7	75.0	53.3	75.0	36.5	75.0	44.3	59.1
	5' - 4"	32.6	65.2	24.7	49.3	37.8	75.0	58.8	75.0	58.8	75.0	50.0	75.0	34.2	75.0	41.6	55.4
	5' - 8"	30.7	61.4	23.2	46.4	35.6	71.2	55.4	75.0	55.4	75.0	47.0	75.0	32.2	75.0	39.1	52.2
	6' - 0"	29.0	58.0	21.9	43.8	33.6	67.2	52.3	75.0	52.3	75.0	44.4	75.0	30.4	75.0	36.9	49.3
12' - 2"	3' - 6"	47.0	75.0	35.5	71.0	54.5	75.0	75.0	75.0	75.0	75.0	72.0	75.0	49.3	75.0	59.9	75.0
	4' - 0"	41.1	75.0	31.1	62.1	47.7	75.0	74.1	75.0	74.1	75.0	63.0	75.0	43.1	75.0	52.4	69.8
	4' - 8"	35.2	70.4	26.6	53.3	40.9	75.0	63.5	75.0	63.5	75.0	54.0	75.0	37.0	75.0	44.9	59.9
	5' - 0"	32.9	65.8	24.9	49.7	38.1	75.0	59.3	75.0	59.3	75.0	50.4	75.0	34.5	75.0	41.9	55.9
	5' - 4"	30.8	61.6	23.3	46.6	35.8	71.5	55.6	75.0	55.6	75.0	47.2	75.0	32.4	75.0	39.3	52.4
	5' - 8"	29.0	58.0	21.9	43.9	33.6	67.3	52.3	75.0	52.3	75.0	44.4	75.0	30.5	75.0	37.0	49.3
	6' - 0"	27.4	54.8	20.7	41.4	31.8	63.6	49.4	75.0	49.4	75.0	42.0	75.0	28.8	75.0	34.9	46.6

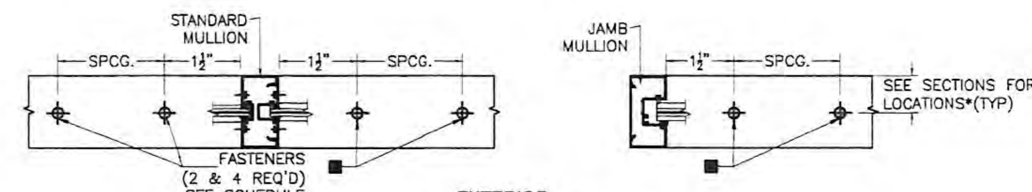

EXTERIOR
SCHEMATIC CONCRETE CONNECTION DETAIL *

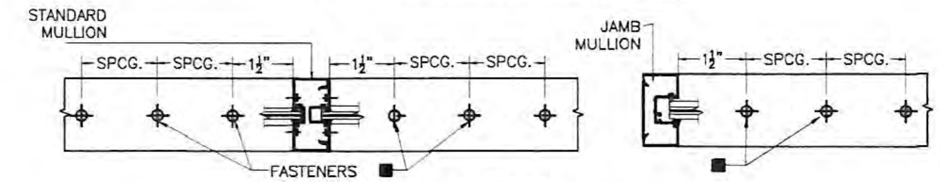

EXTERIOR
SCHEMATIC GROUT-FILLED CONCRETE BLOCK CONNECTION DETAIL *

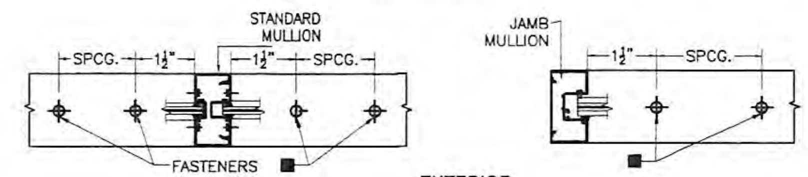

EXTERIOR
SCHEMATIC STEEL CONNECTION DETAIL *

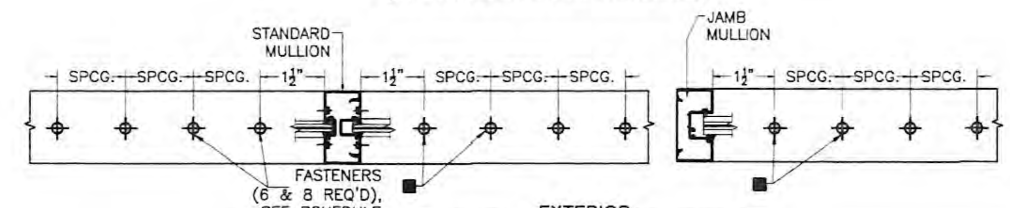

EXTERIOR
SCHEMATIC WOOD CONNECTION DETAIL *

*SEE CONNECTION DETAILS ON SHEETS 17 THRU 24.

NOTE △ TOTAL NUMBER OF ANCHORS INDICATED ON SCHEDULE CORRESPONDS TO STANDARD MULLION CONNECTION TOTAL NUMBER OF REQUIRED ANCHORS FOR JAMB MULLION CONNECTION IS HALF OF THE TOTAL NUMBERS OF ANCHORS USED AT STANDARD MULLION CONNECTION.

■ **FASTENERS TYPES AND SUBSTRATES REQUIREMENTS W/ INDICATED MIN. E.D., BEYOND ANY FINISH MATERIAL & 1/4" MAX. SHIM SPACE, & MIN. SPACING.**

C - 5/16"Ø POWER FASTENERS TAPPER+ ANCHOR W/ 1 3/4" Min. EMBEDMENT INTO POURED CONCRETE (Min. f'c = 3 ksi) , W/ 3 3/8" MIN. E.D. & W/ 3 1/2" MIN. SPCG.

F - 5/16"Ø ELCO ULTRACON W/ 2" Min. EMBEDMENT INTO POURED CONCRETE (Min. f'c = 3 ksi) , W/ 3 1/8" MIN. E.D. & W/ 3 3/4" MIN. SPCG.

H - 3/8"Ø POWER FASTENERS TAPPER ANCHOR W/ 1 3/4" Min. EMBEDMENT INTO INTO POURED CONCRETE (Min. f'c = 3 ksi) , W/ 4 1/2" MIN. E.D. & W/ 4 1/2" MIN. SPCG.

L - 3/8"Ø HILTI HUS-H SCREW ANCHOR W/ 2" Min. EMBEDMENT INTO POURED CONCRETE (Min. f'c=3 ksi), W/ 5" MIN. E.D. & W/ 4" MIN. SPCG.

O - 3/8"Ø HILTI KWIK BOLT 3 ANCHOR W/ 2 1/2" Min. EMBEDMENT INTO POURED CONCRETE (Min. f'c=3 ksi), W/ 4 1/2" MIN. E.D. & W/ 4 1/2" MIN. SPCG.

Q - 3/8"Ø HILTI KWIK BOLT TZ ANCHOR W/ 2" Min. EMBEDMENT INTO POURED CONCRETE (Min. f'c=3 ksi), W/ 4 1/2" MIN. E.D. & W/ 4" MIN. SPCG.

S - 5/16"Ø ELCO ULTRACON W/ 1 1/4" Min. EMBEDMENT INTO GROUT FILLED CONCRETE BLOCK, W/ 3 1/8" MIN. E.D. & W/ 1 7/8" MIN. SPCG.

V - 3/8"Ø -16 TYPE "F" BOLT OR 3/8"Ø -16 ELCO CONSTRUCTION PRODUCTS HEX WASHER HEAD DRILL-FLEX STRUCTURAL DRILL SCREWS TO 1/4" Min. THK. ASTM A-36 STEEL W/ 3/4" MIN. E.D. & W/ 1 1/4" MIN. SPCG.

W - 3/8"Ø LAG OR WOOD SCREWS TO DOUBLE 2 x WOOD BUCK (G=0.55) W/ 3" Min. PENETRATION INTO WOOD, W/ 4 1/2" MIN. E.D. & W/ 2" MIN. SPCG.

TEXAS DEPARTMENT OF INSURANCE - 2006

SERIES FG-5100T
HURRICANE RESISTANT
THERMAL STOREFRONT SYSTEM

Oldcastle BuildingEnvelope™
803 AIRPORT RD. TERRELL TX 75160
www.OldcastleBE.com-Phone 800-869-4567

DRAWN BY: F.R.L
2/3/17
DATE
17-011
DRAWING No
SHEET 13 OF 28

REV. No	DESCRIPTION	DATE	REV. No	DESCRIPTION	DATE
1			3		
2			4		

WALTER A. TILLIT Jr P.E.
PROFESSIONAL ENGINEER
6355 N.W 36 STREET, STE. 305
VIRGINIA GARDENS, FL 33166
PHONE(305) 871-1530 FAX (305) 871-1531
TEXAS LIC. # 90691
FIRM REGISTRATION # F-13790

P.E. SEAL/SIGNATURE/DATE

MAXIMUM DESIGN PRESSURE RATING FOR STANDARD, JAMB & CORNER MULLION CONNECTIONS △

MAXIMUM MULLION SPAN	EFFECTIVE SPACING	POURED CONCRETE (Min. f'c= 3ksi) SUBSTRATE														GROUT FILLED CONCRETE BLOCK SUBSTRATE		1/4" Min. THK. ASTM A-36 STEEL SUBS.		DOUBLE BUCK 3" Min.THK. (G=0.55) WOOD SUBSTRATE	
		FASTENERS TYPES ■														FASTENERS ■		FASTENERS ■		FASTENERS ■	
"L" (Ft-in)	"b" (Ft-in)	B		E		G		J		K		N		P		U		V		W	
		(2 ANC.)	(4 ANC.)	(2 ANC.)	(4 ANC.)	(2 ANC.)	(4 ANC.)	(2 ANC.)	(4 ANC.)	(2 ANC.)	(4 ANC.)	(2 ANC.)	(4 ANC.)	(2 ANC.)	(4 ANC.)	(6 ANC.)		(4 ANC.)		(6 ANC.)	(8 ANC.)
6' - 0"	3' - 6"	75.0	75.0	72.0	75.0	61.9	75.0	75.0	75.0	75.0	75.0	75.0	75.0	75.0	75.0	75.0		75.0		75.0	75.0
	4' - 0"	69.2	75.0	63.0	75.0	54.2	75.0	75.0	75.0	75.0	75.0	75.0	75.0	75.0	75.0	75.0		75.0		75.0	75.0
	4' - 8"	59.3	75.0	54.0	75.0	46.4	75.0	75.0	75.0	75.0	75.0	75.0	75.0	75.0	75.0	75.0		75.0		75.0	75.0
	5' - 0"	55.3	75.0	50.4	75.0	43.3	75.0	75.0	75.0	75.0	75.0	75.0	75.0	71.5	75.0	75.0		75.0		75.0	75.0
	5' - 4"	51.9	75.0	47.3	75.0	40.6	75.0	75.0	75.0	75.0	75.0	75.0	75.0	67.0	75.0	75.0		75.0		75.0	75.0
	5' - 8"	48.8	75.0	44.5	75.0	38.2	75.0	75.0	75.0	70.9	75.0	75.0	75.0	63.1	75.0	75.0		75.0		75.0	75.0
	6' - 0"	46.1	75.0	42.0	75.0	36.1	75.0	75.0	75.0	67.0	75.0	75.0	75.0	59.6	75.0	75.0		75.0		70.8	75.0
6' - 6"	3' - 6"	73.0	75.0	66.5	75.0	57.1	75.0	75.0	75.0	75.0	75.0	75.0	75.0	75.0	75.0	75.0		75.0		75.0	75.0
	4' - 0"	63.8	75.0	58.2	75.0	50.0	75.0	75.0	75.0	75.0	75.0	75.0	75.0	75.0	75.0	75.0		75.0		75.0	75.0
	4' - 8"	54.7	75.0	49.8	75.0	42.9	75.0	75.0	75.0	75.0	75.0	75.0	75.0	70.7	75.0	75.0		75.0		75.0	75.0
	5' - 0"	51.1	75.0	46.5	75.0	40.0	75.0	75.0	75.0	74.2	75.0	75.0	75.0	66.0	75.0	75.0		75.0		75.0	75.0
	5' - 4"	47.9	75.0	43.6	75.0	37.5	75.0	75.0	75.0	69.6	75.0	75.0	75.0	61.9	75.0	75.0		75.0		73.5	75.0
	5' - 8"	45.1	75.0	41.0	75.0	35.3	70.6	75.0	75.0	65.5	75.0	75.0	75.0	58.2	75.0	75.0		75.0		69.2	75.0
	6' - 0"	42.6	75.0	38.8	75.0	33.3	66.7	71.8	75.0	61.8	75.0	75.0	75.0	55.0	75.0	75.0		75.0		65.4	75.0
7' - 0"	3' - 6"	67.8	75.0	61.7	75.0	53.1	75.0	75.0	75.0	75.0	75.0	75.0	75.0	75.0	75.0	75.0		75.0		75.0	75.0
	4' - 0"	59.3	75.0	54.0	75.0	46.4	75.0	75.0	75.0	75.0	75.0	75.0	75.0	75.0	75.0	75.0		75.0		75.0	75.0
	4' - 8"	50.8	75.0	46.3	75.0	39.8	75.0	75.0	75.0	73.8	75.0	75.0	75.0	65.6	75.0	75.0		75.0		75.0	75.0
	5' - 0"	47.4	75.0	43.2	75.0	37.1	74.3	75.0	75.0	68.9	75.0	75.0	75.0	61.3	75.0	75.0		75.0		72.8	75.0
	5' - 4"	44.5	75.0	40.5	75.0	34.8	69.6	75.0	75.0	64.6	75.0	75.0	75.0	57.4	75.0	75.0		75.0		68.3	75.0
	5' - 8"	41.8	75.0	38.1	75.0	32.8	65.5	70.6	75.0	60.8	75.0	75.0	75.0	54.0	75.0	75.0		75.0		64.3	75.0
	6' - 0"	39.5	75.0	36.0	72.0	31.0	61.9	66.7	75.0	57.4	75.0	75.0	75.0	51.0	75.0	75.0		75.0		60.7	75.0
7' - 6"	3' - 6"	63.2	75.0	57.6	75.0	49.5	75.0	75.0	75.0	75.0	75.0	75.0	75.0	75.0	75.0	75.0		75.0		75.0	75.0
	4' - 0"	55.3	75.0	50.4	75.0	43.3	75.0	75.0	75.0	75.0	75.0	75.0	75.0	71.5	75.0	75.0		75.0		75.0	75.0
	4' - 8"	47.4	75.0	43.2	75.0	37.1	74.3	75.0	75.0	68.9	75.0	75.0	75.0	61.3	75.0	75.0		75.0		72.8	75.0
	5' - 0"	44.3	75.0	40.3	75.0	34.7	69.3	74.7	75.0	64.3	75.0	75.0	75.0	57.2	75.0	75.0		75.0		68.0	75.0
	5' - 4"	41.5	75.0	37.8	75.0	32.5	65.0	70.0	75.0	60.3	75.0	75.0	75.0	53.6	75.0	75.0		75.0		63.7	75.0
	5' - 8"	39.1	75.0	35.6	71.1	30.6	61.2	65.9	75.0	56.7	75.0	75.0	75.0	50.4	75.0	75.0		75.0		60.0	75.0
	6' - 0"	36.9	73.8	33.6	67.2	28.9	57.8	62.2	75.0	53.6	75.0	75.0	75.0	47.6	75.0	75.0		75.0		56.7	75.0
8' - 0"	3' - 6"	59.3	75.0	54.0	75.0	46.4	75.0	75.0	75.0	75.0	75.0	75.0	75.0	75.0	75.0	75.0		75.0		75.0	75.0
	4' - 0"	51.9	75.0	47.3	75.0	40.6	75.0	75.0	75.0	75.0	75.0	75.0	75.0	67.0	75.0	75.0		75.0		75.0	75.0
	4' - 8"	44.5	75.0	40.5	75.0	34.8	69.6	75.0	75.0	64.6	75.0	75.0	75.0	57.4	75.0	75.0		75.0		68.3	75.0
	5' - 0"	41.5	75.0	37.8	75.0	32.5	65.0	70.0	75.0	60.3	75.0	75.0	75.0	53.6	75.0	75.0		75.0		63.7	75.0
	5' - 4"	38.9	75.0	35.4	70.9	30.5	60.9	65.6	75.0	56.5	75.0	75.0	75.0	50.3	75.0	75.0		75.0		59.8	75.0
	5' - 8"	36.6	73.2	33.4	66.7	28.7	57.3	61.8	75.0	53.2	75.0	75.0	75.0	47.3	75.0	75.0		75.0		56.2	75.0
	6' - 0"	34.6	69.2	31.5	63.0	27.1	54.2	58.3	75.0	50.3	75.0	75.0	75.0	44.7	75.0	75.0		75.0		53.1	70.8
8' - 6"	3' - 6"	55.8	75.0	50.8	75.0	43.7	75.0	75.0	75.0	75.0	75.0	75.0	75.0	72.1	75.0	75.0		75.0		75.0	75.0
	4' - 0"	48.8	75.0	44.5	75.0	38.2	75.0	75.0	75.0	70.9	75.0	75.0	75.0	63.1	75.0	75.0		75.0		75.0	75.0
	4' - 8"	41.8	75.0	38.1	75.0	32.8	65.5	70.6	75.0	60.8	75.0	75.0	75.0	54.0	75.0	75.0		75.0		64.3	75.0
	5' - 0"	39.1	75.0	35.6	71.2	30.6	61.2	65.9	75.0	56.8	75.0	75.0	75.0	50.4	75.0	75.0		75.0		60.0	75.0
	5' - 4"	36.6	73.2	33.4	66.7	28.7	57.4	61.8	75.0	53.2	75.0	75.0	75.0	47.3	75.0	75.0		75.0		56.2	75.0
	5' - 8"	34.5	68.9	31.4	62.8	27.0	54.0	58.1	75.0	50.1	75.0	74.9	75.0	44.5	75.0	75.0		75.0		52.9	70.6
	6' - 0"	32.5	65.1	29.6	59.3	25.5	51.0	54.9	75.0	47.3	75.0	70.7	75.0	42.0	75.0	75.0		75.0		50.0	66.6
9' - 0"	3' - 6"	52.7	75.0	48.0	75.0	41.3	75.0	75.0	75.0	75.0	75.0	75.0	75.0	68.1	75.0	75.0		75.0		75.0	75.0
	4' - 0"	46.1	75.0	42.0	75.0	36.1	72.2	75.0	75.0	67.0	75.0	75.0	75.0	59.6	75.0	75.0		75.0		70.8	75.0
	4' - 8"	39.5	75.0	36.0	72.0	31.0	61.9	66.7	75.0	57.4	75.0	75.0	75.0	51.0	75.0	75.0		75.0		60.7	75.0
	5' - 0"	36.9	73.8	33.6	67.2	28.9	57.8	62.2	75.0	53.6	75.0	75.0	75.0	47.6	75.0	75.0		75.0		56.7	75.0
	5' - 4"	34.6	69.2	31.5	63.0	27.1	54.2	58.3	75.0	50.3	75.0	75.0	75.0	44.7	75.0	75.0		75.0		53.1	70.8
	5' - 8"	32.5	65.1	29.6	59.3	25.5	51.0	54.9	75.0	47.3	75.0	70.7	75.0	42.0	75.0	75.0		75.0		50.0	66.6
	6' - 0"	30.7	61.5	28.0	56.0	24.1	48.1	51.9	75.0	44.7	75.0	66.8	75.0	39.7	75.0	75.0		75.0		47.2	62.9
9' - 6"	3' - 6"	49.9	75.0	45.5	75.0	39.1	75.0	75.0	75.0	72.5	75.0	75.0	75.0	64.5	75.0	75.0		75.0		75.0	75.0
	4' - 0"	43.7	75.0	39.8	75.0	34.2	68.4	73.7	75.0	63.5	75.0	75.0	75.0	56.4	75.0	75.0		75.0		67.1	75.0
	4' - 8"	37.4	74.9	34.1	68.2	29.3	58.6	63.2	75.0	54.4	75.0	75.0	75.0	48.4	75.0	75.0		75.0		57.5	75.0
	5' - 0"	34.9	69.9	31.8	63.7	27.4	54.7	58.9	75.0	50.8	75.0	75.0	75.0	45.1	75.0	75.0		75.0		53.7	71.6
	5' - 4"	32.8	65.5	29.8	59.7	25.7	51.3	55.3	75.0	47.6	75.0	71.2	75.0	42.3	75.0	75.0		75.0		50.3	67.1
	5' - 8"	30.8	61.7	28.1	56.2	24.1	48.3	52.0	75.0	44.8	75.0	67.0	75.0	39.8	75.0	75.0		75.0		47.4	63.1
	6' - 0"	29.1	58.2	26.5	53.1	22.8	45.6	49.1	75.0	42.3	75.0	63.3	75.0	37.6	75.0	75.0		75.0		44.7	59.6
10' - 0"	3' - 6"	47.4	75.0	43.2	75.0	37.1	74.3	75.0	75.0	68.9	75.0	75.0	75.0	61.3	75.0	75.0		75.0		72.8	75.0
	4' - 0"	41.5	75.0	37.8	75.0	32.5	65.0	70.0	75.0	60.3	75.0	75.0	75.0	53.6	75.0	75.0		75.0		63.7	75.0
	4' - 8"	35.6	71.1	32.4	64.8	27.9	55.7	60.0	75.0	51.7	75.0	75.0	75.0	45.9	75.0	75.0		75.0		54.6	72.8
	5' - 0"	33.2	66.4	30.2	60.5	26.0	52.0	56.0	75.0	48.2	75.0	72.2	75.0	42.9	75.0	75.0		75.0		51.0	68.0
	5' - 4"	31.1	62.3	28.4	56.7	24.4	48.8	52.5	75.0	45.2	75.0	67.7	75.0	40.2	75.0	75.0		75.0		47.8	63.7
	5' - 8"	29.3	58.6	26.7	53.4	22.9	45.9	49.4	75.0	42.6	75.0	63.7	75.0	37.8	75.0	75.0		75.0		45.0	60.0
	6' - 0"	27.7	55.3	25.2	50.4	21.7	43.3	46.7	75.0	40.2	75.0	60.1	75.0	35.7	71.5	75.0		75.0		42.5	56.7
10' - 6"	3' - 6"	45.2	75.0	41.1	75.0	35.4	70.7	75.0	75.0	65.6	75.0	75.0	75.0	58.3	75.0	75.0		75.0		69.4	75.0
	4' - 0"	39.5	75.0	36.0	72.0	31.0	61.9	66.7	75.0	57.4	75.0	75.0	75.0	51.0	75.0	75.0		75.0		60.7	75.0
	4' - 8"	33.9	67.8	30.9	61.7	26.5	53.1	57.1	75.0	49.2	75.0	73.6	75.0	43.8	75.0	75.0		75.0		52.0	69.4
	5' - 0"	31.6	63.2	28.8	57.6	24.8	49.5	53.3	75.0	45.9	75.0	68.7	75.0	40.8	75.0	75.0		75.0		48.6	64.7
	5' - 4"	29.6	59.3	27.0	54.0	23.2	46.4	50.0	75.0	43.1	75.0	64.4	75.0	38.3	75.0	75.0		75.0		45.5	60.7
	5' - 8"	27.9	55.8	25.4	50.8	21.8	43.7	47.1	75.0	40.5	75.0	60.6	75.0	36.0	72.1	75.0		75.0		42.8	57.1
	6' - 0"	26.3	52.7	24.0	48.0	20.6	41.3	44.4	75.0	38.3	75.0	57.3	75.0	34.0	68.1	75.0		75.0		40.5	54.0
11' - 0"	3' - 6"	43.1	75.0	39.3	75.0	33.8	67.5	72.7	75.0	62.6	75.0	75.0	75.0	55.7	75.0	75.0		75.0		66.2	75.0
	4' - 0"	37.7	75.0	34.4	68.7	29.5	59.1	63.6	75.0	54.8	75.0	75.0	75.0	48.7	75.0	75.0		75.0		57.9	75.0
	4' - 8"	32.3	64.7	29.5	58.9	25.3	50.6	54.5	75.0	47.0	75.0	70.3	75.0	41.8	75.0	75.0		75.0		49.7	66.2
	5' - 0"	30.2	60.4	27.5	55.0	23.6	47.3	50.9	75.0	43.9	75.0	65.6	75.0	39.0	75.0	75.0		75.0		46.4	61.8
	5' - 4"	28.3	56.6	25.8	51.5	22.2	44.3	47.7	75.0	41.1	75.0	61.5	75.0	36.5	73.1	75.0		75.0		43.5	57.9
	5' - 8"	26.6	53.3	24.3	48.5	20.9	41.7	44.9	75.0	38.7	75.0	57.9	75.0	34.4	68.8	75.0		75.0		40.9	54.5
	6' - 0"	25.2	50.3	22.9	45.8	19.7	39.4	42.4	75.0	36.5	73.1	54.7	75.0	32.5	65.0	75.0		75.0		38.6	51.5
11' - 6"	3' - 6"	41.2	75.0	37.6	75.0	32.3	64.6	69.6	75.0	59.9	75.0	75.0	75.0	53.3	75.0	75.0		75.0		63.3	75.0
	4' - 0"	36.1	72.2	32.9	65.7	28.3	56.5	60.9	75.0	52.4	75.0	75.0	75.0	46.6	75.0	75.0		75.0		55.4	73.9
	4' - 8"	30.9	61.9	28.2	56.3	24.2	48.4	52.2	75.0	44.9	75.0	67.2	75.0	39.9	75.0	75.0		75.0		47.5	63.3
	5' - 0"	28.9	57.7	26.3	52.6	22.6	45.2	48.7	75.0	41.9	75.0	62.7	75.0	37.3	74.6	75.0		75.0		44.3	59.1
	5' - 4"	27.1	54.1	24.7	49.3	21.2	42.4	45.7	75.0	39.3	75.0	58.8	75.0	35.0	69.9	75.0		75.0		41.6	55.4
	5' - 8"	25.5	50.9	23.2	46.4	19.9	39.9	43.0	75.0	37.0	74.0	55.4	75.0	32.9	65.8	75.0		75.0		39.1	52.2
	6' - 0"	24.1	48.1	21.9	43.8	18.8	37.7	40.6	75.0	35.0	69.9	52.3	75.0	31.1	62.1	75.0		75.0		36.9	49.3
12' - 2"	3' - 6"	39.0	75.0	35.5	71.0	30.5	61.1	65.8	75.0	56.6	75.0	75.0	75.0	50.3	75.0	75.0		75.0		59.9	75.0
	4' - 0"	34.1	68.2	31.1	62.1	26.7	53.4	57.5	75.0	49.6	75.0	74.1	75.0	44.1	75.0	75.0		75.0		52.4	69.8
	4' - 8"	29.2	58.5	26.6	53.3	22.9	45.8	49.3	75.0	42.5	75.0	63.5	75.0	37.8	75.0	75.0		75.0		44.9	59.9
	5' - 0"	27.3	54.6	24.9	49.7	21.4	42.7	46.0	75.0	39.6	75.0	59.3	75.0	35.2	70.5	75.0		75.0		41.9	55.9
	5' - 4"	25.6	51.2	23.3	46.6	20.0	40.1	43.2	75.0	37.2	74.3	55.6	75.0	33.0	66.1	75.0		75.0		39.3	52.4
	5' - 8"	24.1	48.2	21.9	43.9	18.9	37.7	40.6	75.0	35.0	70.0	52.3	75.0	31.1	62.2	75.0		75.0		37.0	49.3
	6' - 0"	22.7	45.5	20.7	41.4	17.0	35.6	38.4	75.0	33.0	66.1	49.4	75.0	29.4	58.7	75.0		75.0		34.9	46.6

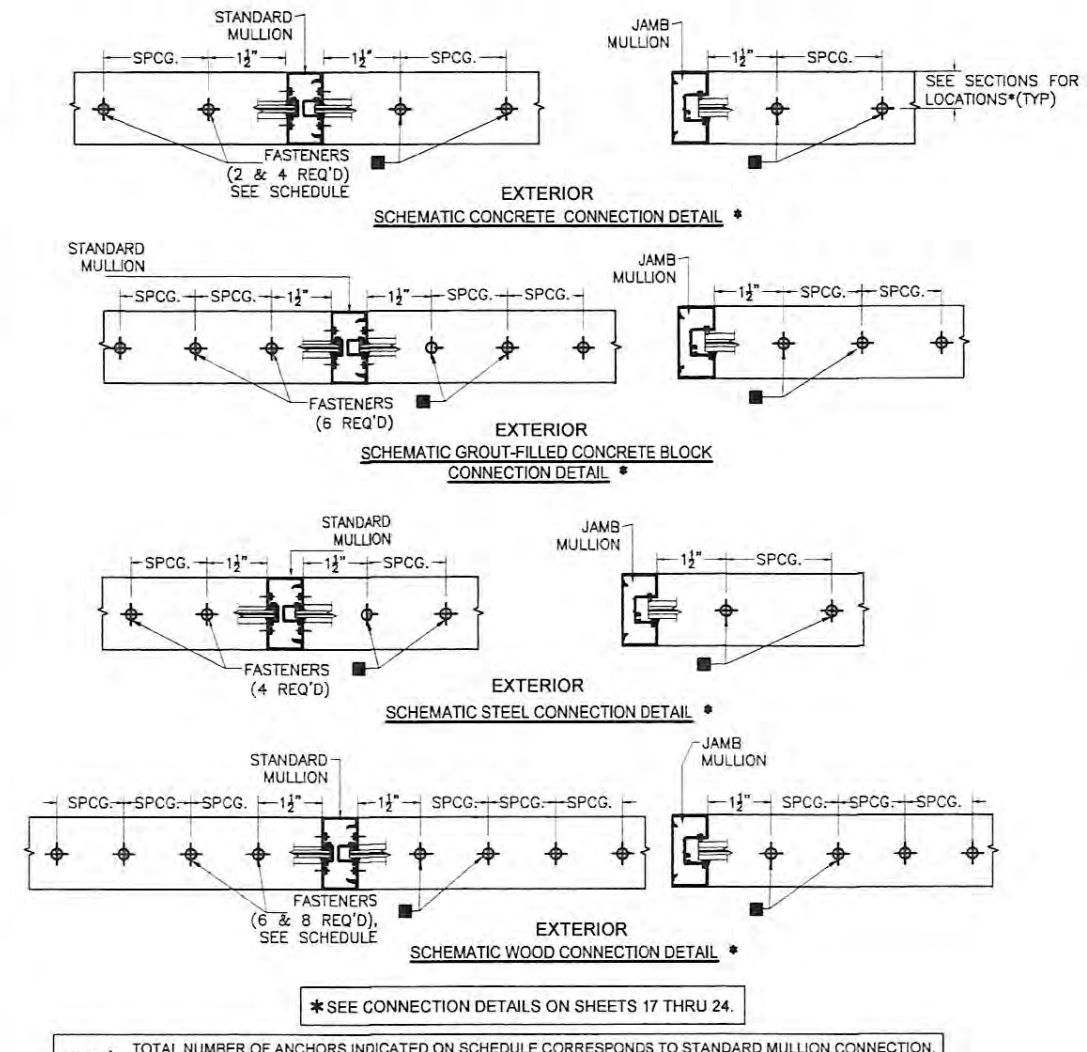

*SEE CONNECTION DETAILS ON SHEETS 17 THRU 24.

NOTE △ TOTAL NUMBER OF ANCHORS INDICATED ON SCHEDULE CORRESPONDS TO STANDARD MULLION CONNECTION. TOTAL NUMBER OF REQUIRED ANCHORS FOR JAMB MULLION CONNECTION IS HALF OF THE TOTAL NUMBERS OF ANCHORS USED AT STANDARD MULLION CONNECTION.

■ **FASTENERS TYPES AND SUBSTRATES REQUIREMENTS W/ INDICATED MIN. E.D., BEYOND ANY FINISH MATERIAL & 1/4" MAX. SHIM SPACE, & MIN. SPACING.**

B - 5/16"Ø POWER FASTENERS TAPPER+ ANCHOR W/ 1 3/4" Min. EMBEDMENT INTO POURED CONCRETE (Min. f'c = 3 ksi), W/ 2 3/4" MIN. E.D. & W/ 3 1/2" MIN. SPCG.

E - 5/16"Ø ELCO ULTRACON W/ 1 3/4" Min. EMBEDMENT INTO POURED CONCRETE (Min. f'c = 3 ksi), W/ 2 3/16" MIN. E.D. & W/ 5" MIN. SPCG.

G - 3/8"Ø POWER FASTENERS TAPPER ANCHOR W/ 1 3/4" Min. EMBEDMENT INTO INTO POURED CONCRETE (Min. f'c = 3 ksi), W/ 2 1/2" MIN. E.D. & W/ 4 1/2" MIN. SPCG.

J - 3/8"Ø ITW DYNABOLT SLEEVE ANCHOR W/1 1/2" Min. EMBEDMENT INTO POURED CONCRETE (Min. f'c=3 ksi), W/ 2 1/4" MIN. E.D. & W/ 4 1/2" MIN. SPCG.

K - 3/8"Ø HILTI HUS-H SCREW ANCHOR W/ 2" Min. EMBEDMENT INTO POURED CONCRETE (Min. f'c=3 ksi), W/ 2 3/4" MIN. E.D. & W/ 4" MIN. SPCG.

N - 3/8"Ø HILTI KWIK BOLT 3 ANCHOR W/ 2 1/2" Min. EMBEDMENT INTO POURED CONCRETE (Min. f'c=3 ksi), W/ 2 3/4" MIN. E.D. & W/ 4 1/2" MIN. SPCG.

P - 3/8"Ø HILTI KWIK BOLT TZ ANCHOR W/ 2" Min. EMBEDMENT INTO POURED CONCRETE (Min. f'c=3 ksi), W/ 2 3/4" MIN. E.D. & W/ 4" MIN. SPCG.

U - 3/8"Ø ITW DYNABOLT SLEEVE ANCHOR W/1 1/2" Min. EMBEDMENT INTO GROUT FILLED CONCRETE BLOCK, W/ 2 1/4" MIN. E.D. & W/ 4 1/2" MIN. SPCG.

V - 3/8"Ø -16 TYPE "F" BOLT OR 3/8"Ø -16 ELCO CONSTRUCTION PRODUCTS HEX WASHER HEAD DRILL-FLEX STRUCTURAL DRILL SCREWS TO 1/4" Min. THK. ASTM A-36 STEEL W/ 3/4" MIN. E.D. & W/ 1 1/4" MIN. SPCG.

W - 3/8"Ø LAG OR WOOD SCREWS TO DOUBLE 2 x WOOD BUCK (G=0.55) W/ 3" Min. PENETRATION INTO WOOD, W/ 4 1/2" MIN. E.D. & W/ 2" MIN. SPCG.

TEXAS DEPARTMENT OF INSURANCE - 2006

SERIES FG-5100T
HURRICANE RESISTANT
THERMAL STOREFRONT SYSTEM

DRAWN BY: F.R.L
DATE: 2/3/17
DRAWING No: 17-011
SHEET 14 OF 28

OldcastleBuildingEnvelope®
803 AIRPORT RD. TERRELL TX 75160
www.OldcastleBE.com-Phone 800-869-4567

WALTER A. TILLIT Jr P.E.
PROFESSIONAL ENGINEER
6355 N.W 36 STREET, STE. 305
VIRGINIA GARDENS, FL 33166
PHONE(305) 871-1530 FAX (305) 871-1531
TEXAS LIC. # 90691
FIRM REGISTRATION # F-13790

REV. No.	DESCRIPTION	DATE	REV. No.	DESCRIPTION	DATE
1			3		
2			4		

STATE OF TEXAS

11/16/17

P.E. SEAL/SIGNATURE/DATE

MAXIMUM DESIGN PRESSURE RATING FOR STANDARD, JAMB & CORNER MULLION CONNECTIONS △

MAXIMUM MULLION SPAN	EFFECTIVE SPACING	POURED CONCRETE (Min. f'c= 3ksi) SUBSTRATE								GROUT FILLED CONCRETE BLOCK SUBSTRATE		1/4" Min. THK. ASTM A-36 STEEL SUBS.	DOUBLE BUCK 3" Min.THK. (G=0.55) WOOD SUBSTRATE	
		FASTENERS TYPES ■								FASTENERS ■		FASTENERS ■	FASTENERS ■	
		A		D		I		M		R	T	V	W	
"L" (Ft-in)	"b" (Ft-in)	(2 ANC.)	(4 ANC.)	(2 ANC.)	(4 ANC.)	(2 ANC.)	(4 ANC.)	(2 ANC.)	(4 ANC.)	(6 ANC.)	(6 ANC.)	(4 ANC.)	(6 ANC.)	(8 ANC.)
6' - 0"	3' - 6"	50.5	75.0	41.0	75.0	66.7	75.0	59.0	75.0	75.0	75.0	75.0	75.0	75.0
	4' - 0"	44.2	75.0	35.8	71.7	58.3	75.0	51.7	75.0	75.0	75.0	75.0	75.0	75.0
	4' - 8"	37.9	75.0	30.7	61.4	50.0	75.0	44.3	75.0	68.6	75.0	75.0	75.0	75.0
	5' - 0"	35.3	70.7	28.7	57.3	46.7	75.0	41.3	75.0	64.0	75.0	75.0	75.0	75.0
	5' - 4"	33.1	66.3	26.9	53.8	43.8	75.0	38.8	75.0	60.0	75.0	75.0	75.0	75.0
	5' - 8"	31.2	62.3	25.3	50.6	41.2	75.0	36.5	72.9	56.5	75.0	75.0	75.0	75.0
	6' - 0"	29.4	58.9	23.9	47.8	38.9	75.0	34.4	68.9	53.3	75.0	75.0	70.8	75.0
6' - 6"	3' - 6"	46.6	75.0	37.8	75.0	61.5	75.0	54.5	75.0	75.0	75.0	75.0	75.0	75.0
	4' - 0"	40.8	75.0	33.1	66.2	53.8	75.0	47.7	75.0	73.8	75.0	75.0	75.0	75.0
	4' - 8"	34.9	69.9	28.3	56.7	46.2	75.0	40.9	75.0	63.3	75.0	75.0	75.0	75.0
	5' - 0"	32.6	65.2	26.5	52.9	43.1	75.0	38.2	75.0	59.1	75.0	75.0	75.0	75.0
	5' - 4"	30.6	61.2	24.8	49.6	40.4	75.0	35.8	71.5	55.4	75.0	75.0	73.5	75.0
	5' - 8"	28.8	57.6	23.3	46.7	38.0	75.0	33.7	67.3	52.1	73.3	75.0	69.2	75.0
	6' - 0"	27.2	54.4	22.1	44.1	35.9	71.8	31.8	63.6	49.2	69.2	75.0	65.4	75.0
7' - 0"	3' - 6"	43.3	75.0	35.1	70.2	57.1	75.0	50.6	75.0	75.0	75.0	75.0	75.0	75.0
	4' - 0"	37.9	75.0	30.7	61.4	50.0	75.0	44.3	75.0	68.6	75.0	75.0	75.0	75.0
	4' - 8"	32.4	64.9	26.3	52.6	42.9	75.0	38.0	75.0	58.8	75.0	75.0	75.0	75.0
	5' - 0"	30.3	60.6	24.6	49.1	40.0	75.0	35.4	70.9	54.9	75.0	75.0	75.0	75.0
	5' - 4"	28.4	56.8	23.0	46.1	37.5	75.0	33.2	66.4	51.4	72.3	75.0	68.3	75.0
	5' - 8"	26.7	53.4	21.7	43.4	35.3	70.6	31.3	62.5	48.4	68.1	75.0	64.3	75.0
	6' - 0"	25.2	50.5	20.5	41.0	33.3	66.7	29.5	59.0	45.7	64.3	75.0	60.7	75.0
7' - 6"	3' - 6"	40.4	75.0	32.8	65.5	53.3	75.0	47.2	75.0	73.1	75.0	75.0	75.0	75.0
	4' - 0"	35.3	70.7	28.7	53.7	46.7	75.0	41.3	75.0	64.0	75.0	75.0	75.0	75.0
	4' - 8"	30.3	60.6	24.6	49.1	40.0	75.0	35.4	70.9	54.9	75.0	75.0	72.8	75.0
	5' - 0"	28.3	56.5	22.9	45.9	37.3	74.7	33.1	66.1	51.2	72.0	75.0	68.0	75.0
	5' - 4"	26.5	53.0	21.5	43.0	35.0	70.0	31.0	62.0	48.0	67.5	75.0	63.7	75.0
	5' - 8"	24.9	49.9	20.2	40.5	32.9	65.9	29.2	58.3	45.2	63.5	75.0	60.0	75.0
	6' - 0"	23.6	47.1	19.1	38.2	31.1	62.2	27.6	55.1	42.7	60.0	75.0	56.7	75.0
8' - 0"	3' - 6"	37.9	75.0	30.9	61.4	50.0	75.0	44.3	75.0	68.6	75.0	75.0	75.0	75.0
	4' - 0"	33.1	66.3	26.9	53.8	43.8	75.0	38.8	75.0	60.0	75.0	75.0	75.0	75.0
	4' - 8"	28.4	56.8	23.0	46.1	37.5	75.0	33.2	66.4	51.4	72.3	75.0	68.3	75.0
	5' - 0"	26.5	53.0	21.5	43.0	35.0	70.0	31.0	62.0	48.0	67.5	75.0	63.7	75.0
	5' - 4"	24.8	49.7	20.2	40.3	32.8	65.6	29.1	58.1	45.0	63.3	75.0	59.8	75.0
	5' - 8"	23.4	46.8	19.0	37.9	30.9	61.8	27.4	54.7	42.4	59.6	75.0	56.2	75.0
	6' - 0"	22.1	44.2	17.9	35.8	29.2	58.3	25.8	51.7	40.0	56.3	75.0	53.1	70.8
8' - 6"	3' - 6"	35.6	71.3	28.9	57.8	47.1	75.0	41.7	75.0	64.5	75.0	75.0	75.0	75.0
	4' - 0"	31.2	62.4	25.3	50.6	41.2	75.0	36.5	72.9	56.5	75.0	75.0	75.0	75.0
	4' - 8"	26.7	53.4	21.7	43.4	35.3	70.6	31.3	62.5	48.4	68.1	75.0	64.3	75.0
	5' - 0"	24.9	49.9	20.2	40.5	32.9	65.9	29.2	58.4	45.2	63.5	75.0	60.0	75.0
	5' - 4"	23.4	46.8	19.0	37.9	30.9	61.8	27.4	54.7	42.4	59.6	75.0	56.2	75.0
	5' - 8"	22.0	44.0	17.9	35.7	29.1	58.1	25.7	51.5	39.9	56.1	75.0	52.9	70.6
	6' - 0"	20.8	41.6	16.9	33.7	27.5	54.9	24.3	48.6	37.6	52.9	75.0	50.0	66.6
9' - 0"	3' - 6"	33.7	67.3	27.3	54.6	44.4	75.0	39.4	75.0	61.0	75.0	75.0	75.0	75.0
	4' - 0"	29.4	58.9	23.9	47.8	38.9	75.0	34.4	68.9	53.3	75.0	75.0	70.8	75.0
	4' - 8"	25.2	50.5	20.5	40.9	33.3	66.7	29.5	59.0	45.7	64.3	75.0	60.7	75.0
	5' - 0"	23.6	47.1	19.1	38.2	31.1	62.2	27.6	55.1	42.7	60.0	75.0	57.7	75.0
	5' - 4"	22.1	44.2	17.9	35.8	29.2	58.3	25.8	51.7	40.0	56.3	75.0	53.1	70.8
	5' - 8"	20.8	41.6	16.9	33.7	27.4	54.9	24.3	48.6	37.6	52.9	75.0	50.0	66.6
	6' - 0"	19.6	39.3	15.9	31.9	25.9	51.9	23.0	45.9	35.6	50.0	75.0	47.2	62.9
9' - 6"	3' - 6"	31.9	63.8	25.9	51.7	42.1	75.0	37.3	74.6	57.7	75.0	75.0	75.0	75.0
	4' - 0"	27.9	55.8	22.6	45.3	36.8	73.7	32.6	65.3	50.5	71.1	75.0	67.1	75.0
	4' - 8"	23.9	47.8	19.4	38.8	31.6	63.2	28.0	55.9	43.3	60.9	75.0	57.5	75.0
	5' - 0"	22.3	44.6	18.1	36.2	29.5	58.9	26.1	52.2	40.4	56.8	75.0	53.7	71.6
	5' - 4"	20.9	41.8	17.0	33.9	27.6	55.3	24.5	49.0	37.9	53.3	75.0	50.3	67.1
	5' - 8"	19.7	39.4	16.0	31.9	26.0	52.0	23.0	46.1	35.7	50.2	75.0	47.4	63.1
	6' - 0"	18.6	37.2	15.1	30.2	24.6	49.1	21.8	43.5	33.7	47.4	75.0	44.7	59.6
10' - 0"	3' - 6"	30.3	60.6	24.6	49.1	40.0	75.0	35.4	70.9	54.9	75.0	75.0	72.8	75.0
	4' - 0"	26.5	53.0	21.5	43.0	35.0	70.0	31.0	62.0	48.0	67.5	75.0	63.7	75.0
	4' - 8"	22.7	45.4	18.4	36.9	30.0	60.0	26.6	53.1	41.1	57.9	75.0	54.6	72.8
	5' - 0"	21.2	42.4	17.2	34.4	28.0	56.0	24.8	49.6	38.4	54.0	75.0	51.0	68.0
	5' - 4"	19.9	39.8	16.1	32.3	26.3	52.5	23.3	46.5	36.0	50.6	75.0	47.8	63.7
	5' - 8"	18.7	37.4	15.2	30.4	24.7	49.4	21.9	43.8	33.9	47.6	75.0	45.0	60.0
	6' - 0"	17.7	35.3	14.3	28.7	23.3	46.7	20.7	41.3	32.0	45.0	75.0	42.5	56.7
10' - 6"	3' - 6"	28.8	57.7	23.4	46.8	38.1	75.0	33.7	67.5	52.2	73.5	75.0	69.4	75.0
	4' - 0"	25.2	50.5	20.5	41.0	33.3	66.7	29.5	59.0	45.7	64.3	75.0	60.7	75.0
	4' - 8"	21.6	43.3	17.5	35.1	28.6	57.1	25.3	50.6	39.2	55.1	75.0	52.0	69.4
	5' - 0"	20.2	40.4	16.4	32.8	26.7	53.3	23.6	47.2	36.6	51.4	75.0	48.6	64.7
	5' - 4"	18.9	37.9	15.4	30.7	25.0	50.0	22.1	44.3	34.3	48.2	75.0	45.5	60.7
	5' - 8"	17.8	35.6	14.5	28.9	23.5	47.1	20.8	41.7	32.3	45.4	75.0	42.8	57.1
	6' - 0"	16.8	33.7	13.7	27.3	22.2	44.4	19.7	39.4	30.5	42.9	75.0	40.5	54.0
11' - 0"	3' - 6"	27.5	55.1	22.3	44.7	36.4	72.7	32.2	64.4	49.9	70.1	75.0	66.2	75.0
	4' - 0"	24.1	48.2	19.5	39.1	31.8	63.6	28.2	56.4	43.6	61.4	75.0	57.9	75.0
	4' - 8"	20.6	41.3	16.8	33.5	27.3	54.5	24.2	48.3	37.4	52.6	75.0	49.7	66.2
	5' - 0"	19.3	38.5	15.6	31.3	25.5	50.9	22.5	45.1	34.9	49.1	75.0	46.4	61.8
	5' - 4"	18.1	36.1	14.7	29.3	23.9	47.7	21.1	42.3	32.7	46.0	75.0	43.5	57.9
	5' - 8"	17.0	34.0	13.8	27.6	22.5	44.9	19.9	39.8	30.8	43.3	75.0	40.9	54.5
	6' - 0"	16.1	32.1	13.0	26.1	21.2	42.4	18.8	37.6	29.1	40.9	75.0	38.6	51.5
11' - 6"	3' - 6"	26.3	52.7	21.4	42.7	34.8	69.6	30.8	61.6	47.7	67.1	75.0	63.3	75.0
	4' - 0"	23.0	46.1	18.7	37.4	30.4	60.9	27.0	53.9	41.7	58.7	75.0	55.4	73.9
	4' - 8"	19.8	39.5	16.0	32.0	26.1	52.2	23.1	46.2	35.8	50.3	75.0	47.5	63.3
	5' - 0"	18.4	36.9	15.0	29.9	24.3	48.7	21.6	43.1	33.4	47.0	75.0	44.3	59.1
	5' - 4"	17.3	34.6	14.0	28.0	22.8	45.7	20.2	40.4	31.3	44.0	75.0	41.6	55.4
	5' - 8"	16.3	32.5	13.2	26.4	21.5	43.0	19.0	38.1	29.5	41.4	75.0	39.1	52.2
	6' - 0"	15.4	30.7	12.5	24.9	20.3	40.6	18.0	35.9	27.8	39.1	75.0	36.9	49.3
12' - 2"	3' - 6"	24.9	49.8	20.2	40.4	32.9	65.8	29.1	58.2	45.1	63.4	75.0	59.9	75.0
	4' - 0"	21.8	43.6	17.7	35.3	28.8	57.5	25.5	51.0	39.5	55.5	75.0	52.4	69.8
	4' - 8"	18.7	37.3	15.1	30.3	24.7	49.3	21.8	43.7	33.8	47.5	75.0	44.9	59.9
	5' - 0"	17.4	34.8	14.1	28.3	23.0	46.0	20.4	40.8	31.6	44.4	75.0	41.9	55.9
	5' - 4"	16.3	32.7	13.3	26.5	21.6	43.2	19.1	38.2	29.6	41.6	75.0	39.3	52.4
	5' - 8"	15.4	30.7	12.5	24.9	20.3	40.6	18.0	36.0	27.8	39.2	75.0	37.0	49.3
	6' - 0"	14.5	29.0	11.8	23.6	19.2	38.4	17.0	34.0	26.3	37.0	75.0	34.9	46.6

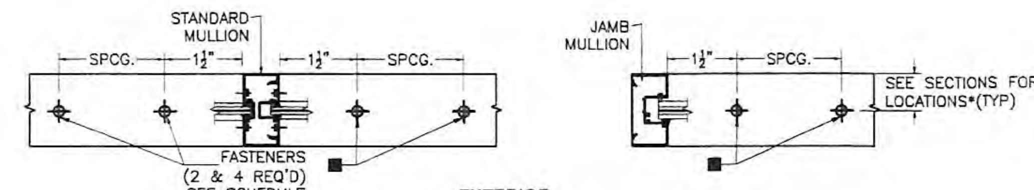

EXTERIOR
SCHEMATIC CONCRETE CONNECTION DETAIL *

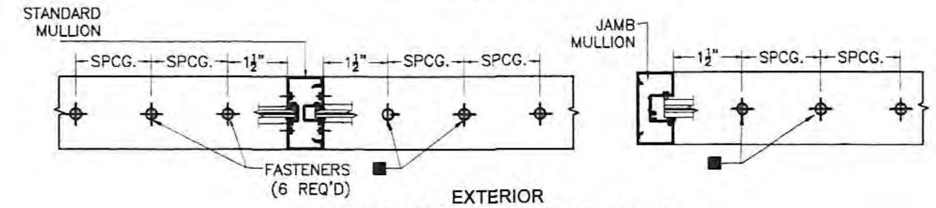

EXTERIOR
SCHEMATIC GROUT-FILLED CONCRETE BLOCK CONNECTION DETAIL *

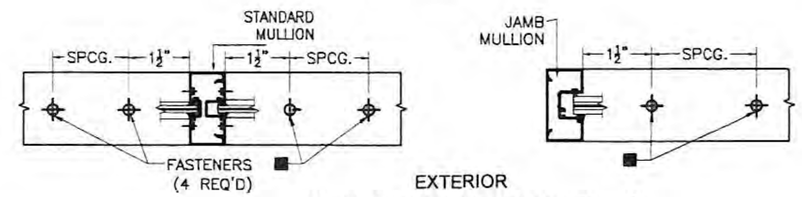

EXTERIOR
SCHEMATIC STEEL CONNECTION DETAIL *

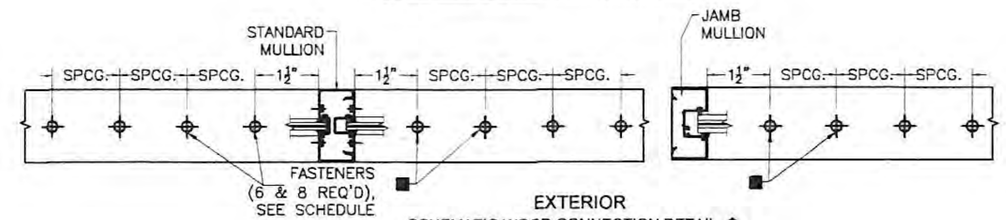

EXTERIOR
SCHEMATIC WOOD CONNECTION DETAIL *

* SEE CONNECTION DETAILS ON SHEETS 17 THRU 24.

NOTE △ TOTAL NUMBER OF ANCHORS INDICATED ON SCHEDULE CORRESPONDS TO STANDARD MULLION CONNECTION. TOTAL NUMBER OF REQUIRED ANCHORS FOR JAMB MULLION CONNECTION IS HALF OF THE TOTAL NUMBERS OF ANCHORS USED AT STANDARD MULLION CONNECTION.

■ **FASTENERS TYPES AND SUBSTRATES REQUIREMENTS W/ INDICATED MIN. E.D., BEYOND ANY FINISH MATERIAL & 1/4" MAX. SHIM SPACE, & MIN. SPACING.**

A - 5/16"Ø POWER FASTENERS TAPPER+ ANCHOR W/ 1 3/4" Min. EMBEDMENT INTO POURED CONCRETE (Min. f'c = 3 ksi) , W/ 1 3/4" MIN. E.D. & W/ 3 1/2" MIN. SPCG.

D - 5/16"Ø ELCO ULTRACON W/ 2" Min. EMBEDMENT INTO POURED CONCRETE (Min. f'c = 3 ksi) , W/ 1 1/4" MIN. E.D. & W/ 5" MIN. SPCG.

I - 3/8"Ø ITW DYNABOLT SLEEVE ANCHOR W/1 1/2" Min. EMBEDMENT INTO POURED CONCRETE (Min. f'c=3 ksi), W/ 1 1/2" MIN. E.D. & W/ 4 1/2" MIN. SPCG.

M - 3/8"Ø HILTI KWIK BOLT 3 ANCHOR W/ 3" Min. EMBEDMENT INTO POURED CONCRETE (Min. f'c=3 ksi), W/ 1 3/4" MIN. E.D. & W/ 4 1/2" MIN. SPCG.

R - 5/16"Ø POWER FASTENERS TAPPER+ ANCHOR W/ 2" Min. EMBEDMENT INTO GROUT FILLED CONCRETE BLOCK, W/ 1 3/4" MIN. E.D. & W/ 5" MIN. SPCG.

T - 3/8"Ø POWER FASTENERS TAPPER ANCHOR W/ 2" Min. EMBEDMENT INTO GROUT FILLED CONCRETE BLOCK, W/ 1 3/4" MIN. E.D. & W/ 4" MIN. SPCG.

V - 3/8"Ø -16 TYPE "F" BOLT OR 3/8"Ø -16 ELCO CONSTRUCTION PRODUCTS HEX WASHER HEAD DRILL-FLEX STRUCTURAL DRILL SCREWS TO 1/4" Min. THK. ASTM A-36 STEEL W/ 3/4" MIN. E.D. & W/ 1 1/4" MIN. SPCG.

W - 3/8"Ø LAG OR WOOD SCREWS TO DOUBLE 2 x WOOD BUCK (G=0.55) W/ 3" Min. PENETRATION INTO WOOD, W/ 4 1/2" MIN. E.D. & W/ 2" MIN. SPCG.

WALTER A. TILLIT Jr P.E.
PROFESSIONAL ENGINEER
6355 N.W 36 STREET, STE. 305
VIRGINIA GARDENS, FL 33166
PHONE(305) 871-1530 FAX (305) 871-1531
TEXAS LIC. # 90691
FIRM REGISTRATION # F-13790

STATE OF TEXAS — WALTER A. TILLIT, JR. — 90691 — LICENSED PROFESSIONAL ENGINEER
11/6/17
P.E. SEAL/SIGNATURE/DATE

TEXAS DEPARTMENT OF INSURANCE - 2006

SERIES FG-5100T
HURRICANE RESISTANT
THERMAL STOREFRONT SYSTEM

Oldcastle BuildingEnvelope®
803 AIRPORT RD. TERRELL TX 75160
www.OldcastleBE.com-Phone 800-869-4567

REV. No	DESCRIPTION	DATE	REV. No	DESCRIPTION	DATE
1			3		
2			4		

DRAWN BY: F.R.L
2/3/17
DATE
17-011
DRAWING No

MAXIMUM DESIGN PRESSURE RATING FOR DOORJAMB MULLION CONNECTIONS

MAXIMUM MULLION SPAN "L" (Ft-in)	EFFECTIVE SPACING "b" (Ft-in)	POURED CONCRETE (Min. f'c= 3ksi) SUBSTRATE, FASTENERS TYPES ■ B (4 ANC.)	C (4 ANC.)	E (4 ANC.)	F (4 ANC.)	G (4 ANC.)	H (4 ANC.)	J (4 ANC.)	K (4 ANC.)	L (4 ANC.)	N (4 ANC.)	O (4 ANC.)	P (4 ANC.)	Q (4 ANC.)	1/4" Min. THK. ASTM A-36 STEEL SUBS., FASTENERS ■ V (4 ANC.)	DOUBLE BUCK 3" Min.THK. (G=0.55) WOOD SUBSTRATE, FASTENERS ■ W (6 ANC.)	W (8 ANC.)
7' - 0"	4' - 0"	75.0	75.0	75.0	75.0	75.0	75.0	75.0	75.0	75.0	75.0	75.0	75.0	75.0	75.0	75.0	75.0
	5' - 0"	75.0	75.0	75.0	75.0	74.3	75.0	75.0	75.0	75.0	75.0	75.0	75.0	75.0	75.0	72.7	75.0
	5' - 4"	75.0	75.0	75.0	75.0	69.6	75.0	75.0	75.0	75.0	75.0	75.0	75.0	75.0	75.0	68.1	75.0
	5' - 8"	75.0	75.0	75.0	75.0	65.5	75.0	75.0	75.0	75.0	75.0	75.0	75.0	75.0	75.0	64.1	75.0
	6' - 0"	75.0	75.0	72.0	72.0	61.9	75.0	75.0	75.0	75.0	75.0	75.0	75.0	75.0	75.0	60.6	75.0
	6' - 4"	74.9	75.0	68.2	68.2	58.6	75.0	75.0	75.0	75.0	75.0	75.0	75.0	75.0	75.0	57.4	75.0
	6' - 8"	71.1	75.0	64.8	64.8	55.7	75.0	75.0	75.0	75.0	75.0	75.0	75.0	75.0	75.0	54.5	72.8
	7' - 0"	67.8	75.0	61.7	61.7	53.1	75.0	75.0	75.0	75.0	75.0	75.0	75.0	75.0	75.0	51.9	69.4
7' - 6"	4' - 0"	75.0	75.0	75.0	75.0	75.0	75.0	75.0	75.0	75.0	75.0	75.0	75.0	75.0	75.0	75.0	75.0
	5' - 0"	75.0	75.0	75.0	75.0	69.3	75.0	75.0	75.0	75.0	75.0	75.0	75.0	75.0	75.0	67.8	75.0
	5' - 4"	75.0	75.0	75.0	75.0	65.0	75.0	75.0	75.0	75.0	75.0	75.0	75.0	75.0	75.0	63.6	75.0
	5' - 8"	75.0	75.0	71.1	71.1	61.2	75.0	75.0	75.0	75.0	75.0	75.0	75.0	75.0	75.0	59.9	75.0
	6' - 0"	73.8	75.0	67.2	67.2	57.8	75.0	75.0	75.0	75.0	75.0	75.0	75.0	75.0	75.0	56.5	75.0
	6' - 4"	69.9	75.0	63.7	63.7	54.7	75.0	75.0	75.0	75.0	75.0	75.0	75.0	75.0	75.0	53.6	71.6
	6' - 8"	66.4	75.0	60.5	60.5	52.0	75.0	75.0	75.0	75.0	75.0	75.0	75.0	75.0	75.0	50.9	68.0
	7' - 0"	63.2	75.0	57.6	57.6	49.5	75.0	75.0	75.0	75.0	75.0	75.0	75.0	75.0	75.0	48.5	64.7
8' - 0"	4' - 0"	75.0	75.0	75.0	75.0	75.0	75.0	75.0	75.0	75.0	75.0	75.0	75.0	75.0	75.0	75.0	75.0
	5' - 0"	75.0	75.0	75.0	75.0	65.0	75.0	75.0	75.0	75.0	75.0	75.0	75.0	75.0	75.0	63.6	75.0
	5' - 4"	75.0	75.0	70.9	70.9	60.9	75.0	75.0	75.0	75.0	75.0	75.0	75.0	75.0	75.0	59.6	75.0
	5' - 8"	73.2	75.0	66.7	66.7	57.3	75.0	75.0	75.0	75.0	75.0	75.0	75.0	75.0	75.0	56.1	75.0
	6' - 0"	69.2	75.0	63.0	63.0	54.2	75.0	75.0	75.0	75.0	75.0	75.0	75.0	75.0	75.0	53.0	70.8
	6' - 4"	65.5	75.0	59.7	59.7	51.3	75.0	75.0	75.0	75.0	75.0	75.0	75.0	75.0	75.0	50.2	67.1
	6' - 8"	62.2	75.0	56.7	56.7	48.7	75.0	75.0	75.0	75.0	75.0	75.0	75.0	75.0	75.0	47.7	63.7
	7' - 0"	59.3	71.4	54.0	54.0	46.4	75.0	75.0	75.0	75.0	75.0	75.0	75.0	75.0	75.0	45.4	60.7
8' - 6"	4' - 0"	75.0	75.0	75.0	75.0	75.0	75.0	75.0	75.0	75.0	75.0	75.0	75.0	75.0	75.0	74.8	75.0
	5' - 0"	75.0	75.0	71.2	71.2	61.2	75.0	75.0	75.0	75.0	75.0	75.0	75.0	75.0	75.0	59.9	75.0
	5' - 4"	73.2	75.0	66.7	66.7	57.4	75.0	75.0	75.0	75.0	75.0	75.0	75.0	75.0	75.0	56.1	75.0
	5' - 8"	68.9	75.0	62.8	62.8	54.0	75.0	75.0	75.0	75.0	75.0	75.0	75.0	75.0	75.0	52.8	70.6
	6' - 0"	65.1	75.0	59.3	59.3	51.0	75.0	75.0	75.0	75.0	75.0	75.0	75.0	75.0	75.0	49.9	66.6
	6' - 4"	61.7	74.3	56.2	56.2	48.3	75.0	75.0	75.0	75.0	75.0	75.0	75.0	75.0	75.0	47.3	63.1
	6' - 8"	58.6	70.6	53.4	53.4	45.9	75.0	75.0	75.0	75.0	75.0	75.0	75.0	75.0	75.0	44.9	60.0
	7' - 0"	55.8	67.2	50.8	50.8	43.7	75.0	75.0	75.0	75.0	75.0	75.0	72.1	75.0	75.0	42.8	57.1
9' - 0"	4' - 0"	75.0	75.0	75.0	75.0	72.2	75.0	75.0	75.0	75.0	75.0	75.0	75.0	75.0	75.0	70.7	75.0
	5' - 0"	73.8	75.0	67.2	67.2	57.8	75.0	75.0	75.0	75.0	75.0	75.0	75.0	75.0	75.0	56.5	75.0
	5' - 4"	69.2	75.0	63.0	63.0	54.2	75.0	75.0	75.0	75.0	75.0	75.0	75.0	75.0	75.0	53.0	70.8
	5' - 8"	65.1	75.0	59.3	59.3	51.0	75.0	75.0	75.0	75.0	75.0	75.0	75.0	75.0	75.0	49.9	66.6
	6' - 0"	61.5	74.1	56.0	56.0	48.1	75.0	75.0	75.0	75.0	75.0	75.0	75.0	75.0	75.0	47.1	62.9
	6' - 4"	58.2	70.2	53.1	53.1	45.6	75.0	75.0	75.0	75.0	75.0	75.0	75.0	75.0	75.0	44.6	59.6
	6' - 8"	55.3	66.7	50.4	50.4	43.3	75.0	75.0	75.0	75.0	75.0	75.0	71.5	75.0	75.0	42.4	56.6
	7' - 0"	52.7	63.5	48.0	48.0	41.3	73.7	75.0	75.0	75.0	75.0	75.0	68.1	75.0	75.0	40.4	54.0
9' - 6"	4' - 0"	75.0	75.0	75.0	75.0	68.4	75.0	75.0	75.0	75.0	75.0	75.0	75.0	75.0	75.0	66.9	75.0
	5' - 0"	69.9	75.0	63.7	63.7	54.7	75.0	75.0	75.0	75.0	75.0	75.0	75.0	75.0	75.0	53.6	71.6
	5' - 4"	65.5	75.0	59.7	59.7	51.3	75.0	75.0	75.0	75.0	75.0	75.0	75.0	75.0	75.0	50.2	67.1
	5' - 8"	61.7	74.3	56.2	56.2	48.3	75.0	75.0	75.0	75.0	75.0	75.0	75.0	75.0	75.0	47.3	63.1
	6' - 0"	58.2	70.2	53.1	53.1	45.6	75.0	75.0	75.0	75.0	75.0	75.0	75.0	75.0	75.0	44.6	59.6
	6' - 4"	55.2	66.5	50.3	50.3	43.2	75.0	75.0	75.0	75.0	75.0	75.0	71.3	75.0	75.0	42.3	56.5
	6' - 8"	52.4	63.2	47.7	47.7	41.1	73.3	75.0	75.0	75.0	75.0	75.0	67.7	75.0	75.0	40.2	53.7
	7' - 0"	49.9	60.2	45.5	45.5	39.1	69.8	75.0	72.5	75.0	75.0	75.0	64.5	75.0	75.0	38.3	51.1
10' - 0"	4' - 0"	75.0	75.0	75.0	75.0	65.0	75.0	75.0	75.0	75.0	75.0	75.0	75.0	75.0	75.0	63.6	75.0
	5' - 0"	66.4	75.0	60.5	60.5	52.0	75.0	75.0	75.0	75.0	75.0	75.0	75.0	75.0	75.0	50.9	68.0
	5' - 4"	62.3	75.0	56.7	56.7	48.8	75.0	75.0	75.0	75.0	75.0	75.0	75.0	75.0	75.0	47.7	63.7
	5' - 8"	58.6	70.6	53.4	53.4	45.9	75.0	75.0	75.0	75.0	75.0	75.0	75.0	75.0	75.0	44.9	60.0
	6' - 0"	55.3	66.7	50.4	50.4	43.3	75.0	75.0	75.0	75.0	75.0	75.0	71.5	75.0	75.0	42.4	56.7
	6' - 4"	52.4	63.2	47.7	47.7	41.1	73.3	75.0	75.0	75.0	75.0	75.0	67.7	75.0	75.0	40.2	53.7
	6' - 8"	49.8	60.0	45.4	45.4	39.0	69.6	75.0	72.4	75.0	75.0	75.0	64.3	75.0	75.0	38.2	51.0
	7' - 0"	47.4	57.1	43.2	43.2	37.1	66.3	75.0	68.9	75.0	75.0	75.0	61.3	75.0	75.0	36.3	48.6
10' - 6"	4' - 0"	75.0	75.0	72.0	72.0	61.9	75.0	75.0	75.0	75.0	75.0	75.0	75.0	75.0	75.0	60.6	75.0
	5' - 0"	63.2	75.0	57.6	57.6	49.5	75.0	75.0	75.0	75.0	75.0	75.0	75.0	75.0	75.0	48.5	64.7
	5' - 4"	59.3	71.4	54.0	54.0	46.4	75.0	75.0	75.0	75.0	75.0	75.0	75.0	75.0	75.0	45.4	60.7
	5' - 8"	55.8	67.2	50.8	50.8	43.7	75.0	75.0	75.0	75.0	75.0	75.0	72.1	75.0	75.0	42.8	57.1
	6' - 0"	52.7	63.5	48.0	48.0	41.3	73.7	75.0	75.0	75.0	75.0	75.0	68.1	75.0	75.0	40.4	54.0
	6' - 4"	49.9	60.2	45.5	45.5	39.1	69.8	75.0	72.5	75.0	75.0	75.0	64.5	75.0	75.0	38.3	51.1
	6' - 8"	47.4	57.1	43.2	43.2	37.1	66.3	75.0	68.9	75.0	75.0	75.0	61.3	75.0	75.0	36.3	48.6
	7' - 0"	45.2	54.4	41.1	41.1	35.4	63.1	75.0	65.6	75.0	75.0	75.0	58.3	75.0	75.0	34.6	46.2
11' - 0"	4' - 0"	75.0	75.0	68.7	68.7	59.1	75.0	75.0	75.0	75.0	75.0	75.0	75.0	75.0	75.0	57.8	75.0
	5' - 0"	60.4	72.7	55.0	55.0	47.3	75.0	75.0	75.0	75.0	75.0	75.0	75.0	75.0	75.0	46.3	61.8
	5' - 4"	56.6	68.2	51.5	51.5	44.3	75.0	75.0	75.0	75.0	75.0	75.0	73.1	75.0	75.0	43.4	57.9
	5' - 8"	53.3	64.2	48.5	48.5	41.7	74.4	75.0	75.0	75.0	75.0	75.0	68.8	75.0	75.0	40.8	54.5
	6' - 0"	50.3	60.6	45.8	45.8	39.4	70.3	75.0	73.1	75.0	75.0	75.0	65.0	75.0	75.0	38.5	51.5
	6' - 4"	47.7	57.4	43.4	43.4	37.3	66.6	75.0	69.2	75.0	75.0	75.0	61.6	75.0	75.0	36.5	48.8
	6' - 8"	45.3	54.5	41.2	41.2	35.5	63.3	75.0	65.8	75.0	75.0	75.0	58.5	75.0	75.0	34.7	46.3
	7' - 0"	43.1	51.9	39.3	39.3	33.8	60.3	72.7	62.6	75.0	75.0	75.0	55.5	75.0	75.0	33.0	44.1
11' - 6"	4' - 0"	72.2	75.0	65.7	65.7	56.5	75.0	75.0	75.0	75.0	75.0	75.0	75.0	75.0	75.0	55.3	73.9
	5' - 0"	57.7	69.6	52.6	52.6	45.2	75.0	75.0	75.0	75.0	75.0	75.0	74.6	75.0	75.0	44.2	59.1
	5' - 4"	54.1	65.2	49.3	49.3	42.4	75.0	75.0	75.0	75.0	75.0	75.0	69.9	75.0	75.0	41.5	55.4
	5' - 8"	50.9	61.4	46.4	46.4	39.9	71.2	75.0	74.0	75.0	75.0	75.0	65.8	75.0	75.0	39.0	52.2
	6' - 0"	48.1	58.0	43.8	43.8	37.7	67.2	75.0	69.9	75.0	75.0	75.0	62.1	75.0	75.0	36.9	49.3
	6' - 4"	45.6	54.9	41.5	41.5	35.7	63.7	75.0	66.2	75.0	75.0	75.0	59.9	75.0	75.0	34.9	46.7
	6' - 8"	43.3	52.2	39.4	39.4	33.9	60.5	73.0	62.9	75.0	75.0	75.0	55.9	75.0	75.0	33.2	44.3
	7' - 0"	41.2	49.7	37.6	37.6	32.3	57.6	69.6	59.9	75.0	75.0	75.0	53.3	75.0	75.0	31.6	42.2
12' - 2"	4' - 0"	68.2	75.0	62.1	62.1	53.4	75.0	75.0	75.0	75.0	75.0	75.0	75.0	75.0	75.0	52.3	69.8
	5' - 0"	54.6	65.8	49.7	49.7	42.7	75.0	75.0	75.0	75.0	75.0	75.0	70.5	75.0	75.0	41.8	55.9
	5' - 4"	51.2	61.6	46.6	46.6	40.1	71.5	75.0	74.3	75.0	75.0	75.0	66.1	75.0	75.0	39.2	52.4
	5' - 8"	48.2	58.0	43.9	43.9	37.7	67.3	75.0	70.0	75.0	75.0	75.0	62.2	75.0	75.0	36.9	49.3
	6' - 0"	45.5	54.8	41.4	41.4	35.6	63.6	75.0	66.1	75.0	75.0	75.0	58.7	75.0	75.0	34.8	46.6
	6' - 4"	43.1	51.9	39.2	39.2	33.7	60.2	72.7	62.6	75.0	75.0	75.0	55.6	75.0	75.0	33.0	44.1
	6' - 8"	40.9	49.3	37.3	37.3	32.1	57.2	69.0	59.5	75.0	75.0	75.0	52.9	75.0	75.0	31.4	41.9
	7' - 0"	39.0	47.0	35.5	35.5	30.5	54.5	65.8	56.6	75.0	75.0	75.0	50.3	72.0	75.0	29.9	39.9

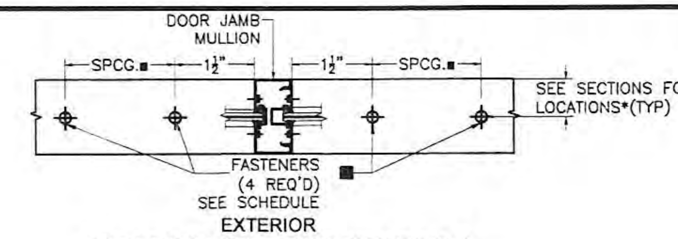

SCHEMATIC CONCRETE CONNECTION DETAIL *

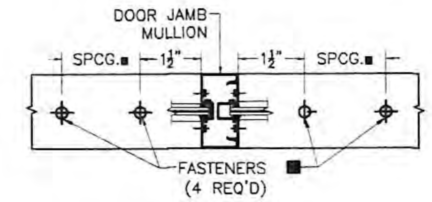

SCHEMATIC STEEL CONNECTION DETAIL *

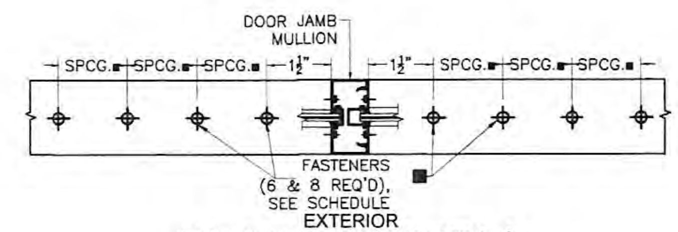

SCHEMATIC WOOD CONNECTION DETAIL *

*SEE CONNECTION DETAILS ON SHEETS 25 THRU 28.

■ **FASTENERS TYPES AND SUBSTRATES REQUIREMENTS W/ INDICATED MIN. E.D., BEYOND ANY FINISH MATERIAL & 1/4" MAX. SHIM SPACE, & MIN. SPACING.**

B - 5/16"Ø POWER FASTENERS TAPPER+ ANCHOR W/ 1 3/4" Min. EMBEDMENT INTO POURED CONCRETE (Min. f'c = 3 ksi) , W/ 2 3/4" MIN. E.D. & W/ 3 1/2" MIN. SPCG. ◊

C - 5/16"Ø POWER FASTENERS TAPPER+ ANCHOR W/ 1 3/4" Min. EMBEDMENT INTO POURED CONCRETE (Min. f'c = 3 ksi) , W/ 3 3/8" MIN. E.D. & W/ 3 1/2" MIN. SPCG. ◊

E - 5/16"Ø ELCO ULTRACON W/ 1 3/4" Min. EMBEDMENT INTO POURED CONCRETE (Min. f'c = 3 ksi) , W/ 2 3/16" MIN. E.D & W/ 5" MIN. SPCG. ◊

F - 5/16"Ø ELCO ULTRACON W/ 2" Min. EMBEDMENT INTO POURED CONCRETE (Min. f'c = 3 ksi) , W/ 3 1/8" MIN. E.D. & W/ 3 3/4" MIN. SPCG. ◊

G - 3/8"Ø POWER FASTENERS TAPPER ANCHOR W/ 1 3/4" Min. EMBEDMENT INTO INTO POURED CONCRETE (Min. f'c = 3 ksi) , W/ 2 1/2" MIN. E.D. & W/ 4 1/2" MIN. SPCG. ◊

H - 3/8"Ø POWER FASTENERS TAPPER ANCHOR W/ 1 3/4" Min. EMBEDMENT INTO INTO POURED CONCRETE (Min. f'c = 3 ksi) , W/ 4 1/2" MIN. E.D. & W/ 4 1/2" MIN. SPCG. ◊

J - 3/8"Ø ITW DYNABOLT SLEEVE ANCHOR W/1 1/2" Min. EMBEDMENT INTO POURED CONCRETE (Min. f'c=3 ksi), W/ 2 1/4" MIN. E.D. & W/ 4 1/2" MIN. SPCG. ◊

K - 3/8"Ø HILTI HUS-H SCREW ANCHOR W/ 2" Min. EMBEDMENT INTO POURED CONCRETE (Min. f'c=3 ksi), W/ 2 3/4" MIN. E.D. & W/ 4" MIN. SPCG.

L - 3/8"Ø HILTI HUS-H SCREW ANCHOR W/ 2" Min. EMBEDMENT INTO POURED CONCRETE (Min. f'c=3 ksi), W/ 5" MIN. E.D. & W/ 4" MIN. SPCG.

N - 3/8"Ø HILTI KWIK BOLT 3 ANCHOR W/ 2 1/2" Min. EMBEDMENT INTO POURED CONCRETE (Min. f'c=3 ksi), W/ 2 3/4" MIN. E.D. & W/ 4 1/2" MIN. SPCG.◊

O - 3/8"Ø HILTI KWIK BOLT 3 ANCHOR W/ 2 1/2" Min. EMBEDMENT INTO POURED CONCRETE (Min. f'c=3 ksi), W/ 4 1/2" MIN. E.D. & W/ 4 1/2" MIN. SPCG. ◊

P - 3/8"Ø HILTI KWIK BOLT TZ ANCHOR W/ 2" Min. EMBEDMENT INTO POURED CONCRETE (Min. f'c=3 ksi), W/ 2 3/4" MIN. E.D. & W/ 4" MIN. SPCG.

Q - 3/8"Ø HILTI KWIK BOLT TZ ANCHOR W/ 2" Min. EMBEDMENT INTO POURED CONCRETE (Min. f'c=3 ksi), W/ 4 1/2" MIN. E.D. & W/ 4" MIN. SPCG.

V - 3/8"Ø -16 TYPE "F" BOLT OR 3/8"Ø -16 ELCO CONSTRUCTION PRODUCTS HEX WASHER HEAD DRILL-FLEX STRUCTURAL DRILL SCREWS TO 1/4" Min. THK. ASTM A-36 STEEL W/ 3/4" MIN. E.D. & W/ 1 1/4" MIN. SPCG. ◊

W - 3/8"Ø WOOD SCREWS TO DOUBLE 2 x WOOD BUCK (G=0.55) W/ 3" Min. PENETRATION INTO WOOD, W/ 4 1/2" MIN. E.D. & W/ 2" MIN. SPCG. ◊

◊ USE FLAT HEAD ANCHORS FOR DOOR JAMB MULLION BOTTOM CONNECTION AT THRESHOLD SIDE OF MULLION.

TEXAS DEPARTMENT OF INSURANCE - 2006

SERIES FG-5100T
HURRICANE RESISTANT
THERMAL STOREFRONT SYSTEM

DRAWN BY: *F.R.L* *2/3/17*

DATE

Oldcastle BuildingEnvelope™
803 AIRPORT RD. TERRELL TX 75160
www.OldcastleBE.com-Phone 800-869-4567

17-011 *DRAWING No*

REV. No	DESCRIPTION	DATE	REV. No	DESCRIPTION	DATE
1			3		
2			4		

SHEET 16 OF 28

WALTER A. TILLIT Jr P.E.
PROFESSIONAL ENGINEER
6355 N.W 36 STREET, STE. 305
VIRGINIA GARDENS, FL 33166
PHONE(305) 871-1530 FAX (305) 871-1531
TEXAS LIC. # 90691
FIRM REGISTRATION # F-13790

11/6/17

P.E. SEAL/SIGNATURE/DATE

HEAD CONNECTION DETAILS FOR WET & DRY GLAZING SYSTEM

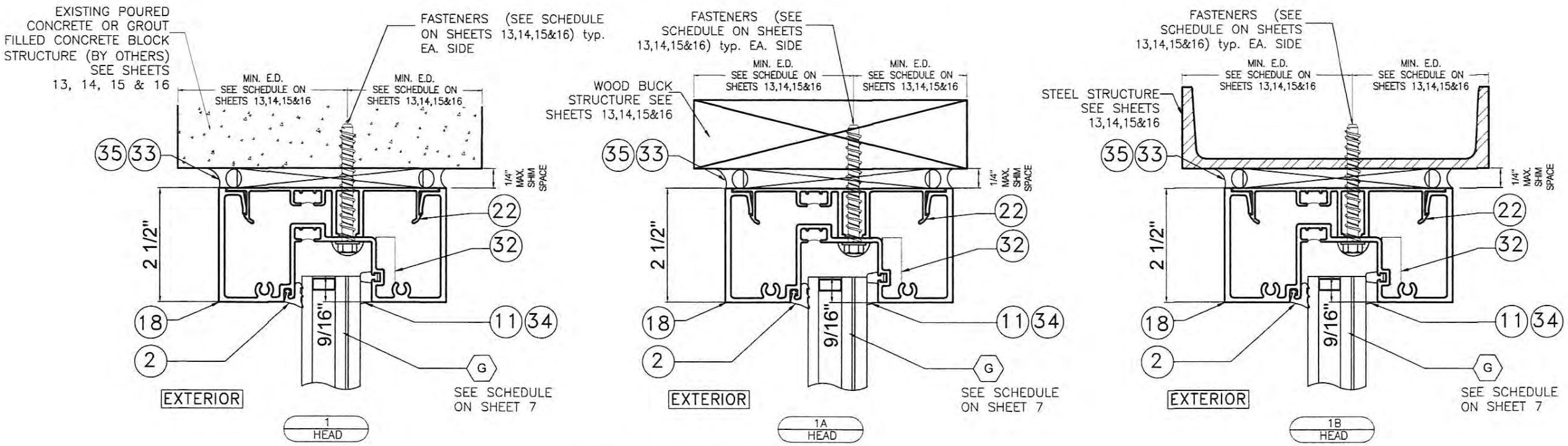

WET GLAZED

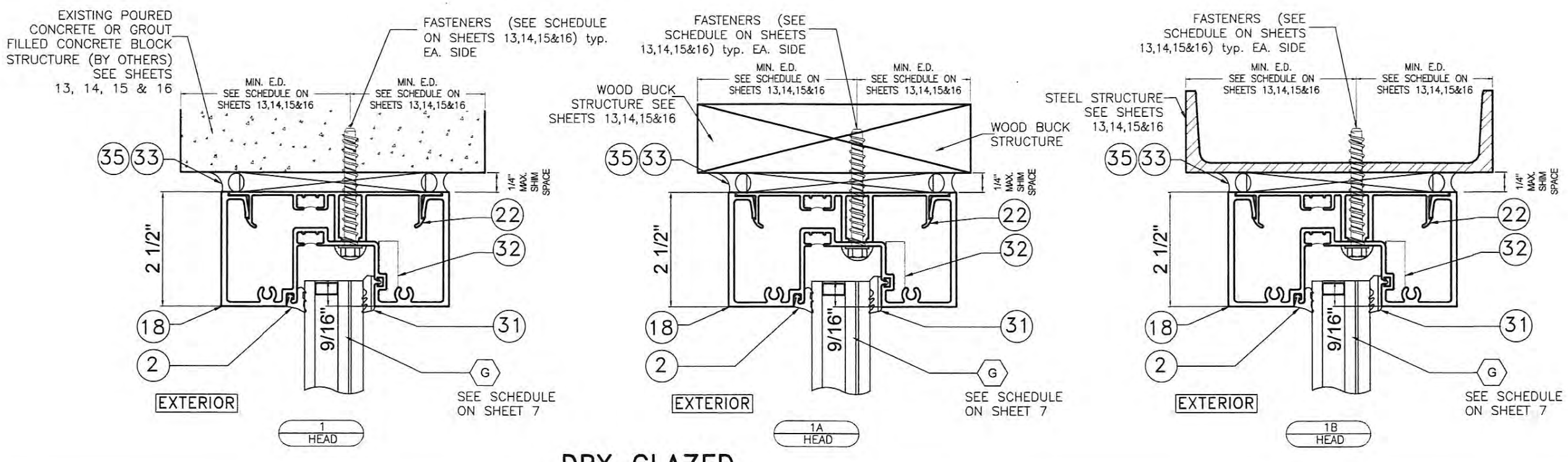

DRY GLAZED

TEXAS DEPARTMENT OF INSURANCE - 2006

SERIES FG-5100T
HURRICANE RESISTANT
THERMAL STOREFRONT SYSTEM

Oldcastle BuildingEnvelope
803 AIRPORT RD. TERRELL TX 75160
www.OldcastleBE.com-Phone 800-869-4367

REV. No.	DESCRIPTION	DATE	REV. No.	DESCRIPTION	DATE
1			3		
2			4		

DRAWN BY: F.R.L 2/3/17
DATE
17-011
DRAWING No
SHEET 17 OF 28

WALTER A. TILLIT Jr P.E.
PROFESSIONAL ENGINEER
6355 N.W 36 STREET, STE. 305
VIRGINIA GARDENS, FL 33166
PHONE(305) 871-1531 FAX (305) 871-1530
TEXAS LIC. # 90691
FIRM REGISTRATION # F-13790

STATE OF TEXAS

P.E. SEAL/SIGNATURE/DATE

HEAD CONNECTION DETAILS FOR WET & DRY GLAZING SYSTEM (CON'T)

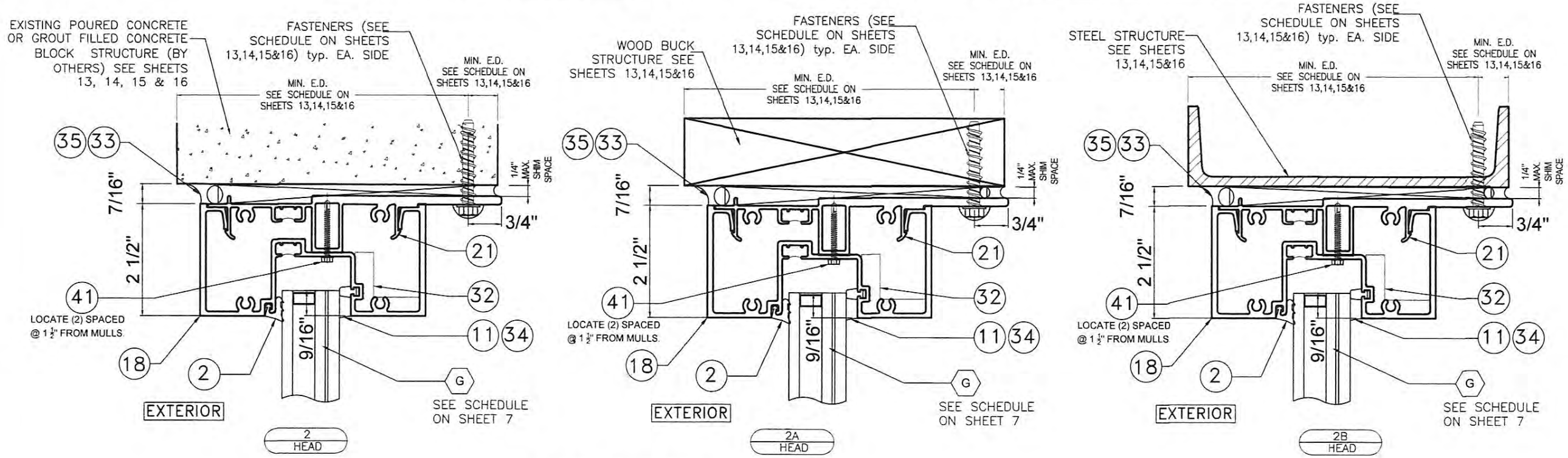

WET GLAZED

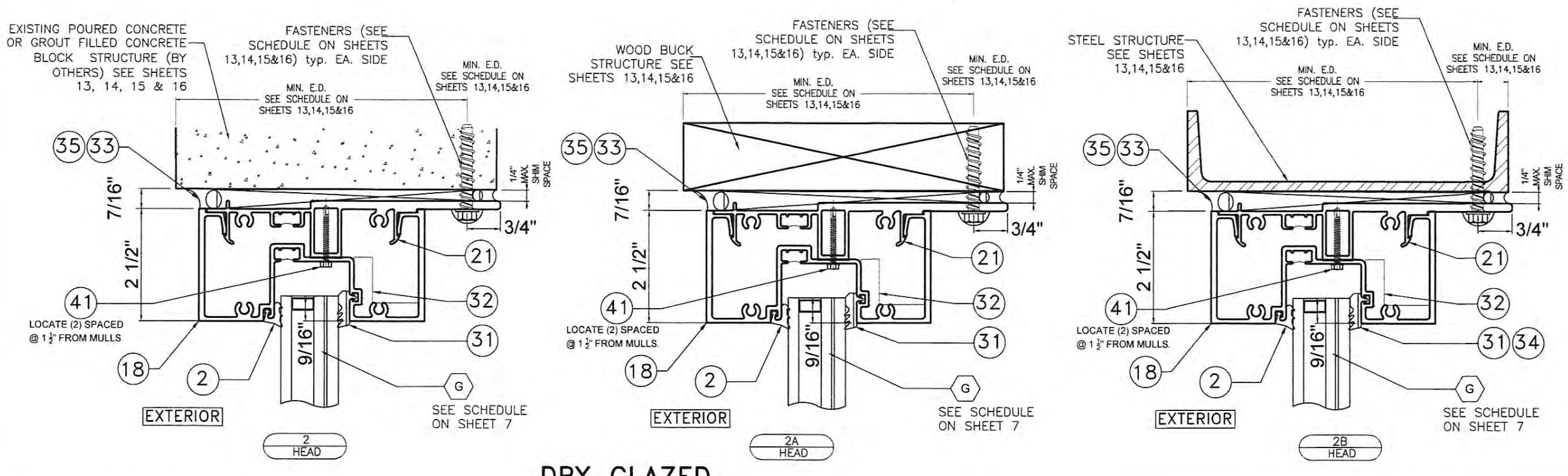

DRY GLAZED

TEXAS DEPARTMENT OF INSURANCE – 2006

SERIES FG-5100T
HURRICANE RESISTANT
THERMAL STOREFRONT SYSTEM

Oldcastle BuildingEnvelope
803 AIRPORT RD. TERRELL TX 75160
www.OldcastleBE.com-Phone 800-869-4567

REV. No.	DESCRIPTION	DATE	REV. No.	DESCRIPTION	DATE
1			3		
2			4		

DRAWN BY: F.R.L
DATE 2/3/17
17-011 DRAWING No
SHEET 18 OF 28

WALTER A. TILLIT Jr P.E.
PROFESSIONAL ENGINEER
6355 N.W 36 STREET, STE. 305
VIRGINIA GARDENS, FL 33166
PHONE(305) 871-1530 FAX (305) 871-1531
TEXAS LIC. # 90691
FIRM REGISTRATION # F-13790

STATE OF TEXAS
11/6/17
P.E. SEAL/SIGNATURE/DATE

SILL CONNECTION DETAILS FOR WET & DRY GLAZING SYSTEM

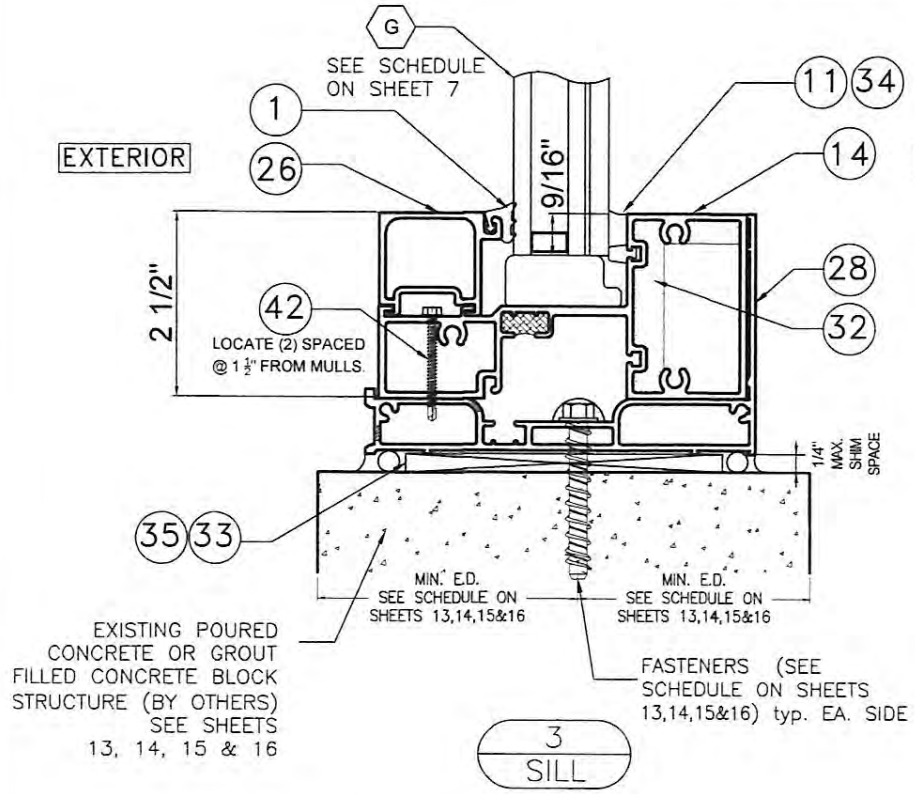

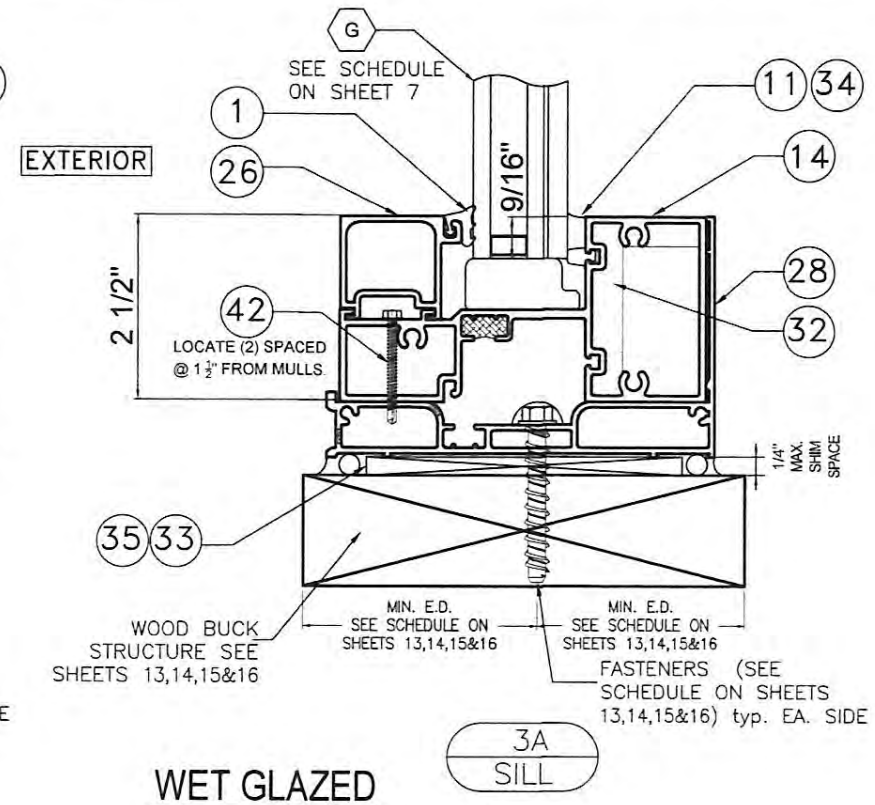

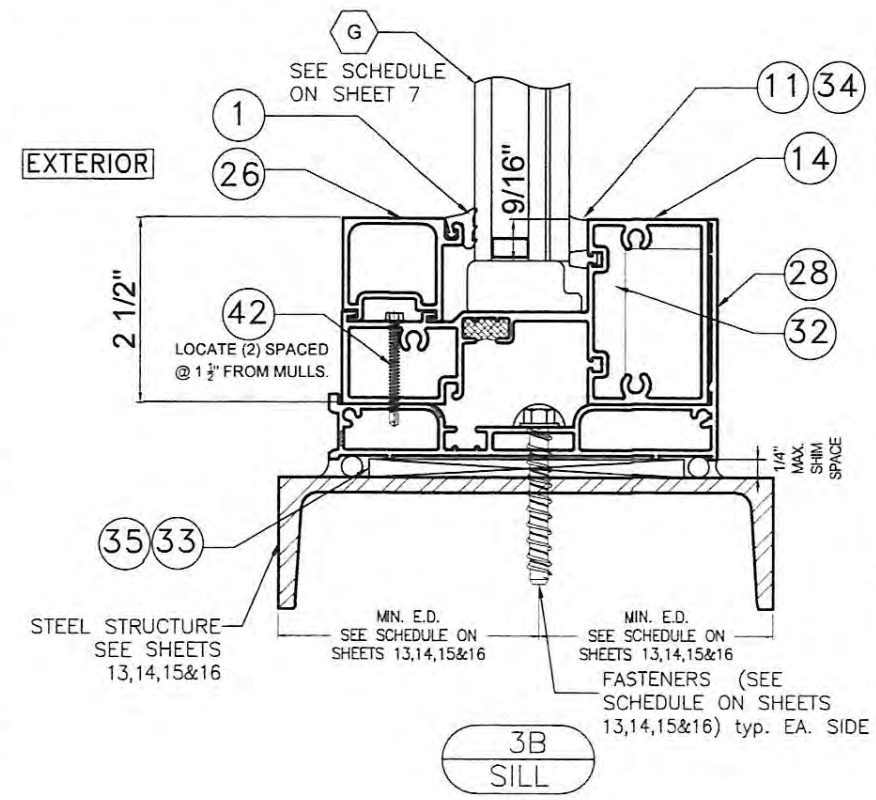

WET GLAZED

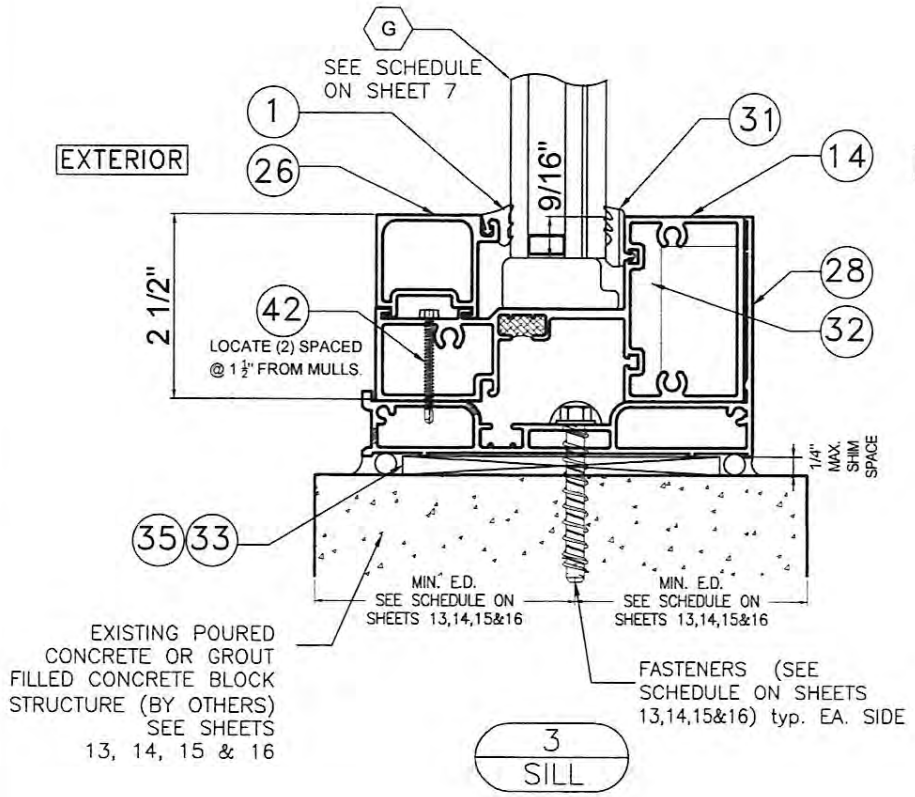

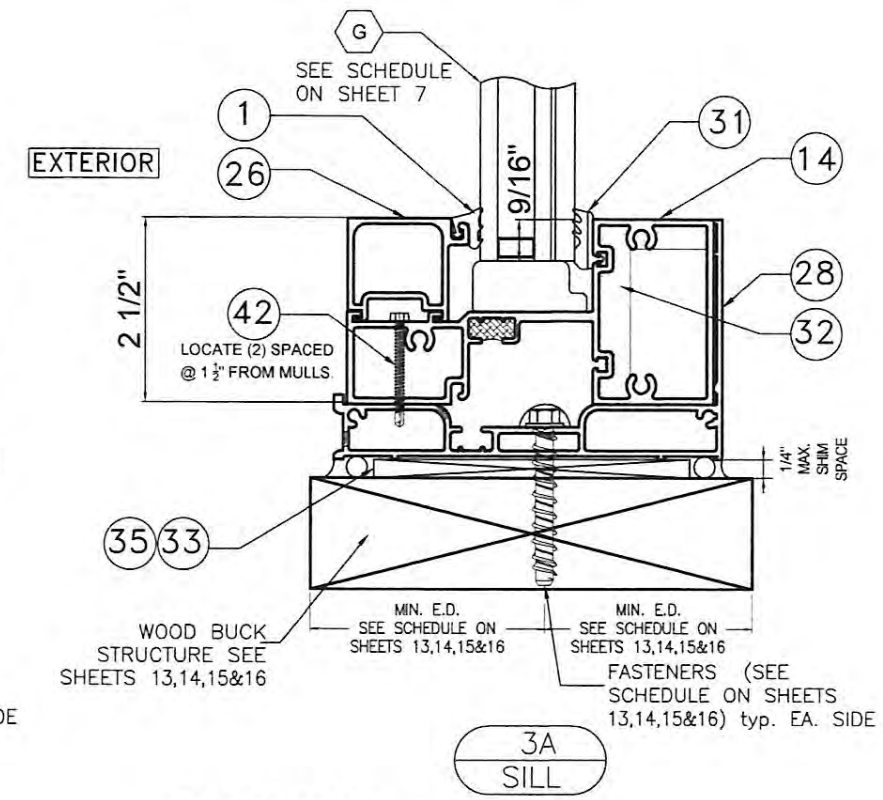

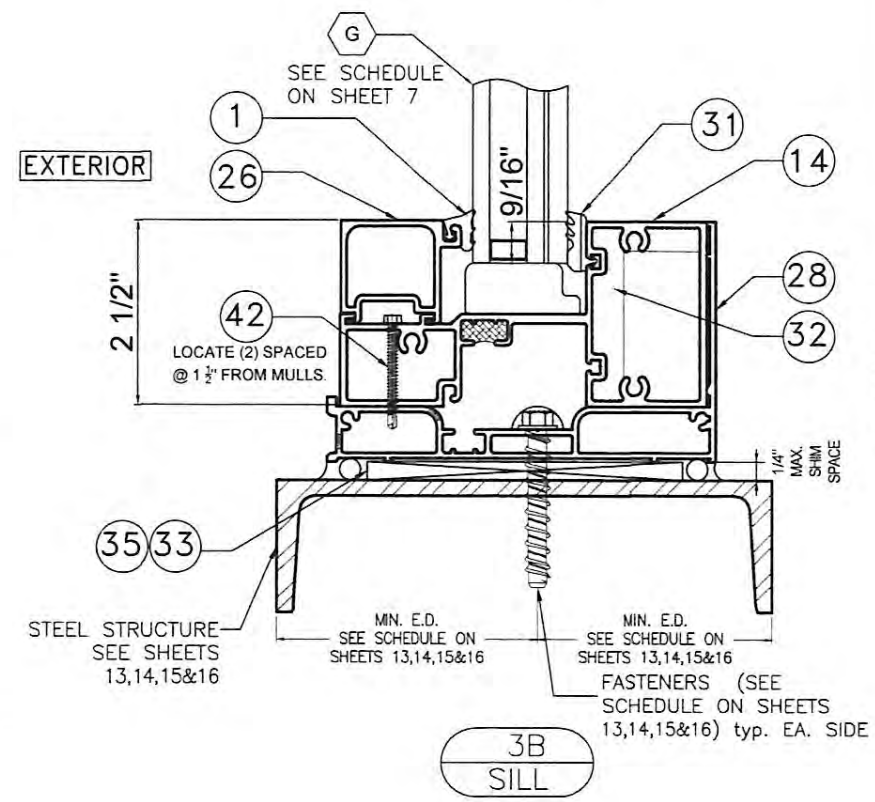

DRY GLAZED

TEXAS DEPARTMENT OF INSURANCE - 2006

SERIES FG-5100T
HURRICANE RESISTANT
THERMAL STOREFRONT SYSTEM

Oldcastle BuildingEnvelope
803 AIRPORT RD. TERRELL, TX 75160
www.OldcastleBE.com-Phone 800-869-4567

REV. No.	DESCRIPTION	DATE	REV. No.	DESCRIPTION	DATE
1			3		
2			4		

DRAWN BY: F.R.L
DATE 2/3/17
DRAWING No 17-011
SHEET 19 OF 28

WALTER A. TILLIT Jr P.E.
PROFESSIONAL ENGINEER
6355 N.W 36 STREET, STE. 305
VIRGINIA GARDENS, FL 33166
PHONE(305) 871-1531 FAX (305) 871-1530
TEXAS LIC. # 90691
FIRM REGISTRATION # F-13790

11/9/17

P.E. SEAL/SIGNATURE/DATE

SILL CONNECTION DETAILS FOR WET & DRY GLAZING SYSTEM (CON'T)

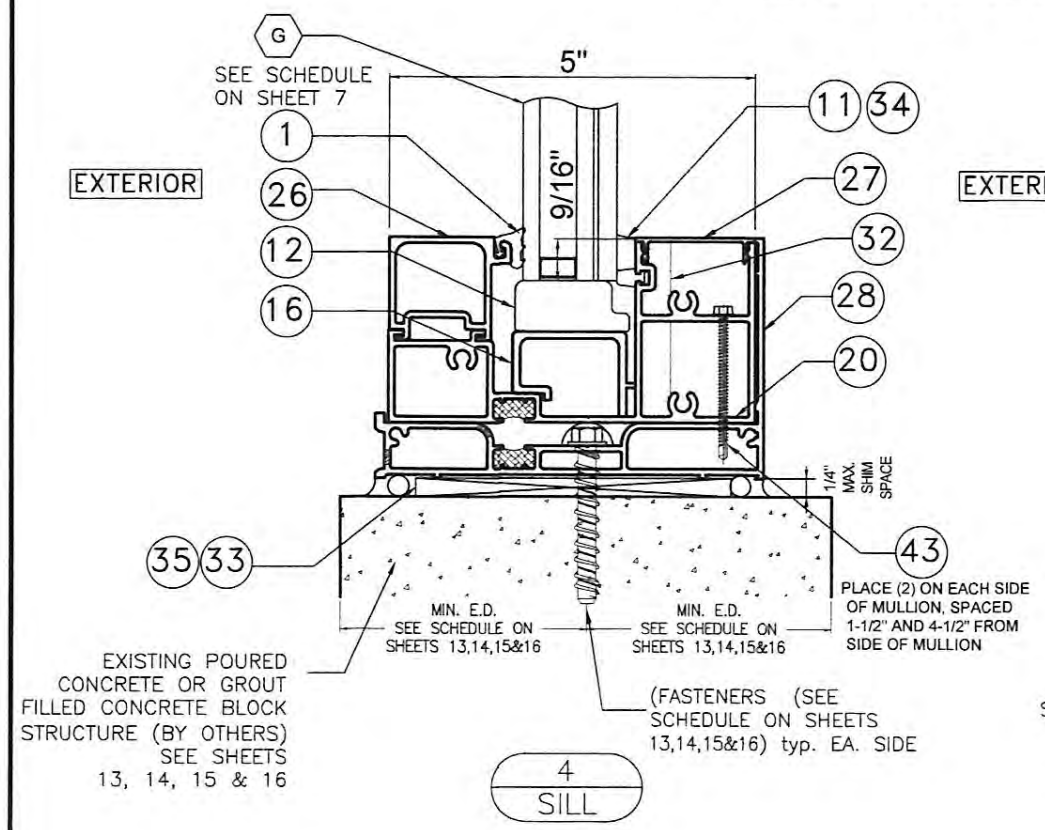

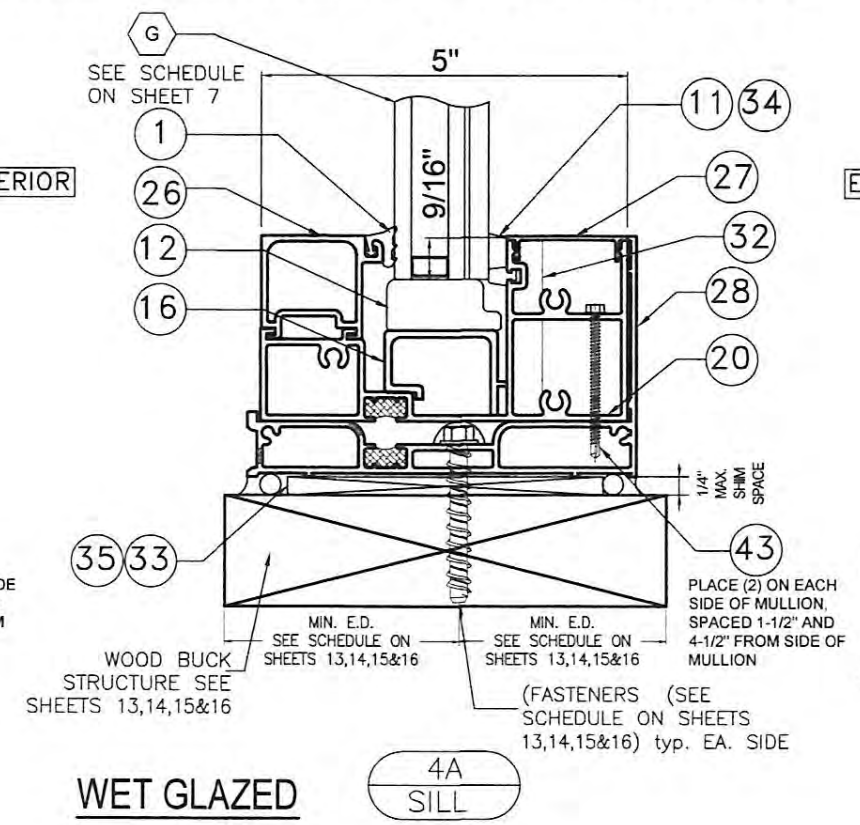

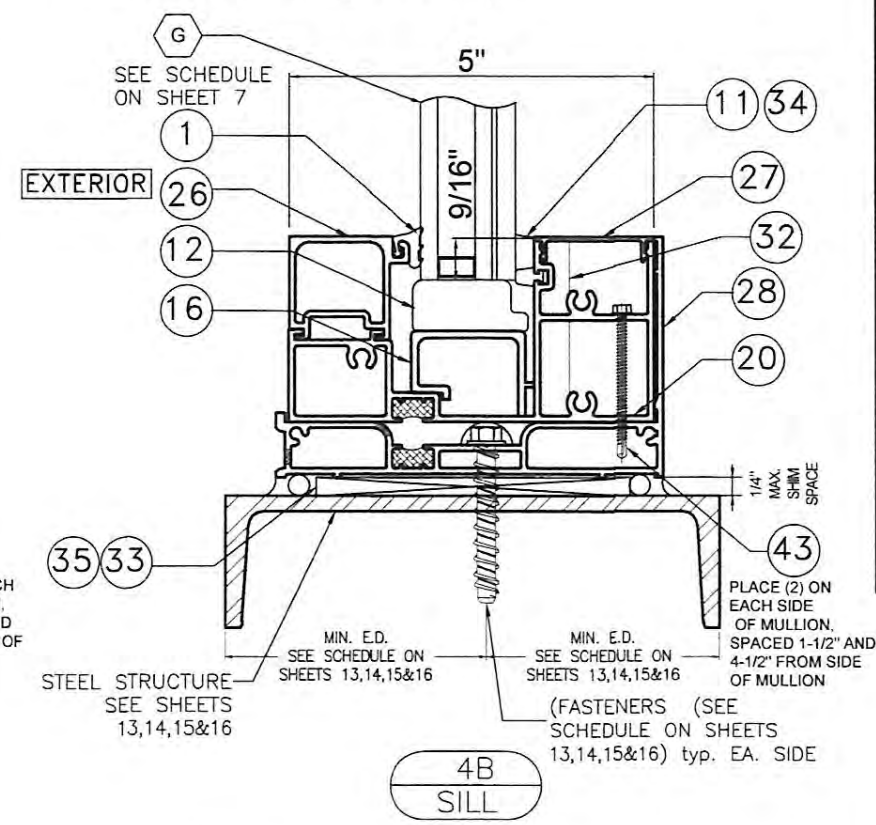

WET GLAZED

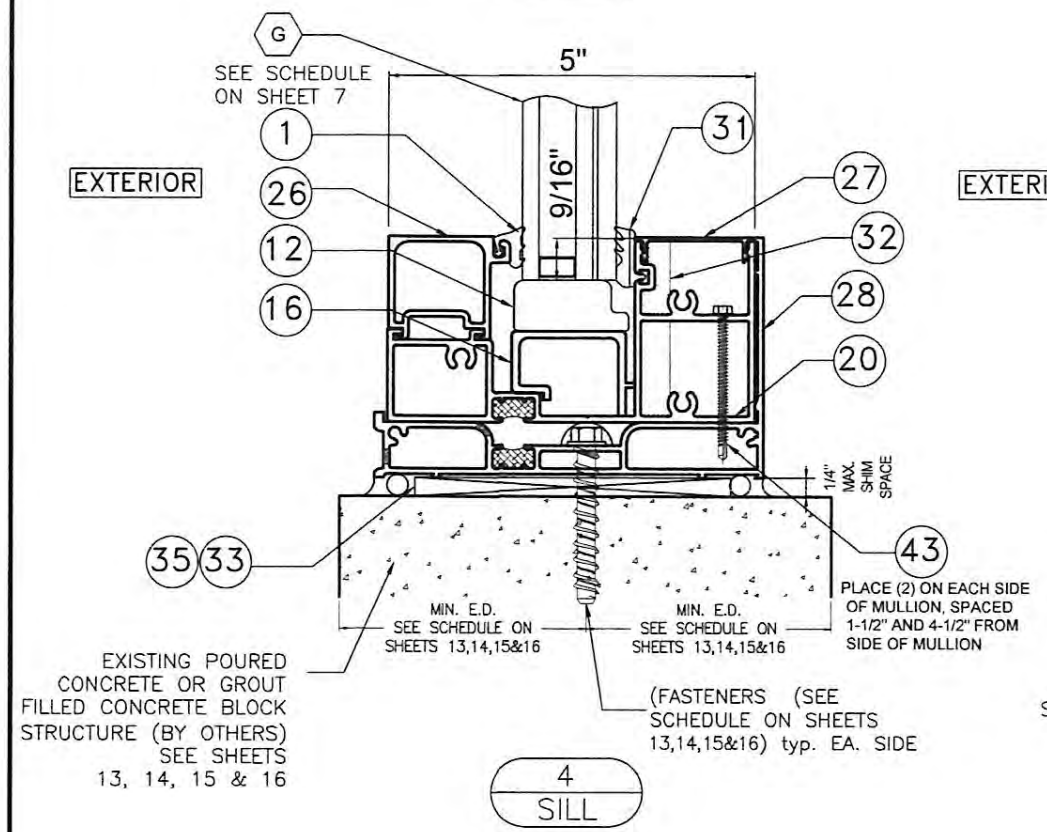

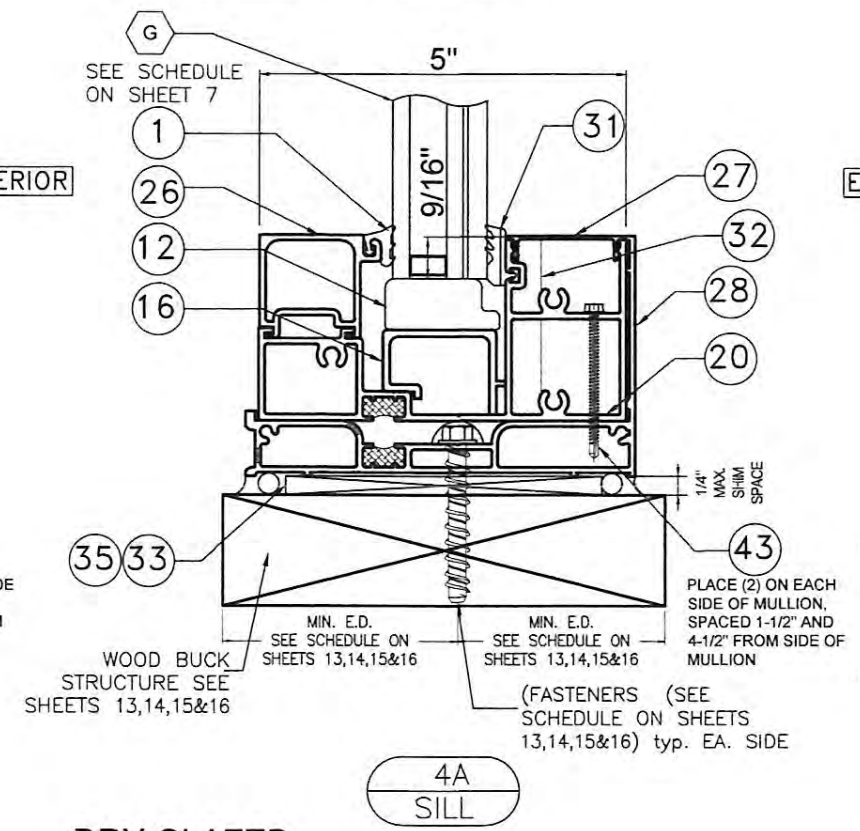

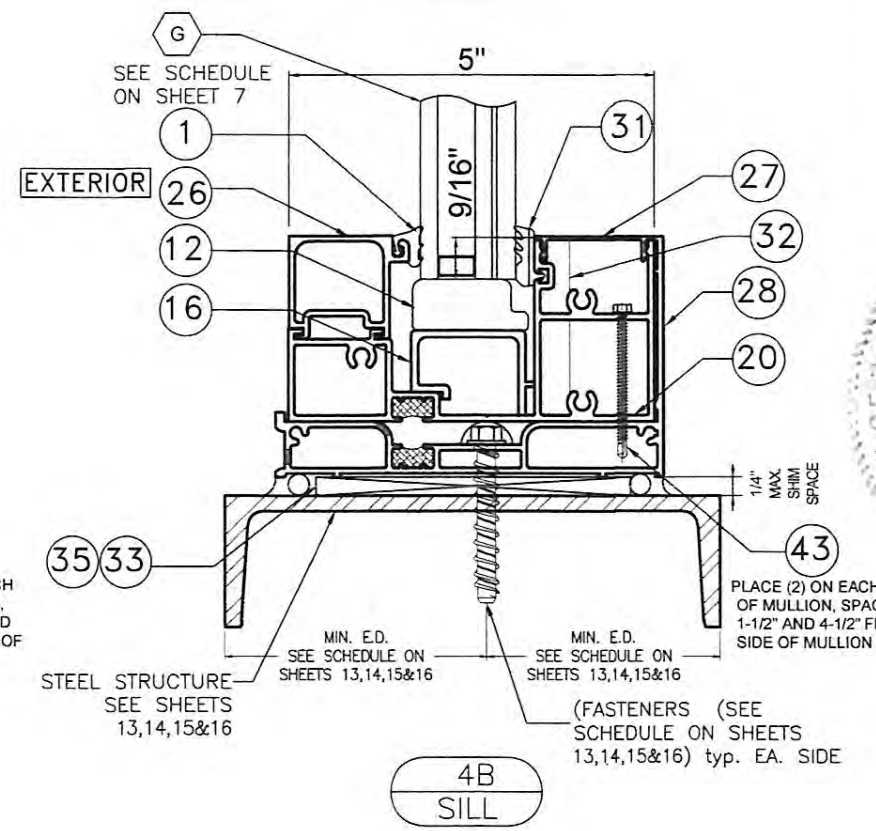

DRY GLAZED

TEXAS DEPARTMENT OF INSURANCE – 2006

SERIES FG-5100T
HURRICANE RESISTANT
THERMAL STOREFRONT SYSTEM

Oldcastle BuildingEnvelope™
803 AIRPORT RD. TERRELL, TX 75160
www.OldcastleBE.com-Phone 800-869-4567

DRAWN BY:	DATE	DRAWING No	SHEET 20 OF 28
F.R.L. 2/3/17		17-011	

REV. No.	DESCRIPTION	DATE	REV. No.	DESCRIPTION	DATE
1			3		
2			4		

WALTER A. TILLIT Jr P.E.
PROFESSIONAL ENGINEER
6355 N.W 36 STREET, STE. 305
VIRGINIA GARDENS, FL 33166
PHONE(305) 871-1530 FAX (305) 871-1531
TEXAS LIC. # 90691
FIRM REGISTRATION # F-13790

STATE OF TEXAS
11/6/17

P.E. SEAL/SIGNATURE/DATE

SILL CONNECTION DETAILS FOR WET & DRY GLAZING SYSTEM (CON'T)

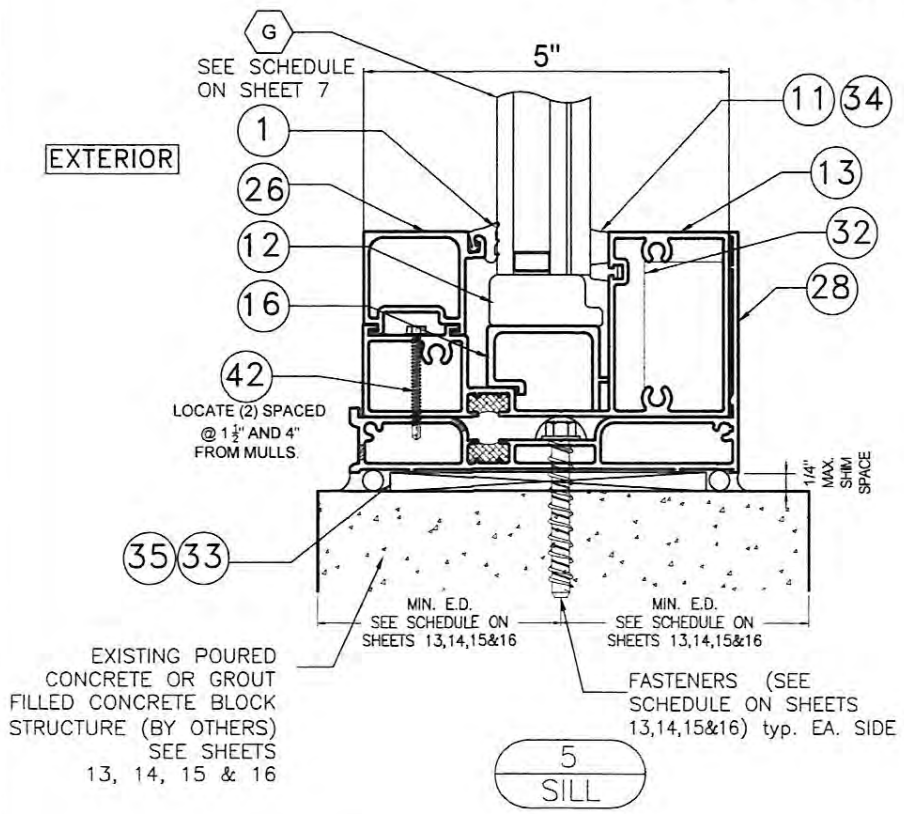

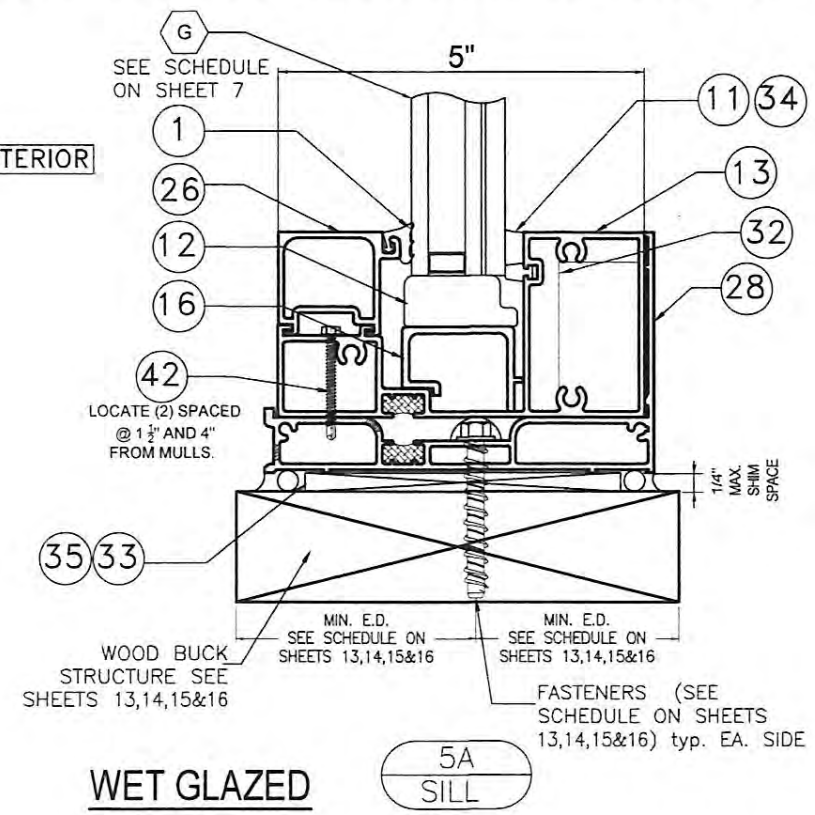

WET GLAZED

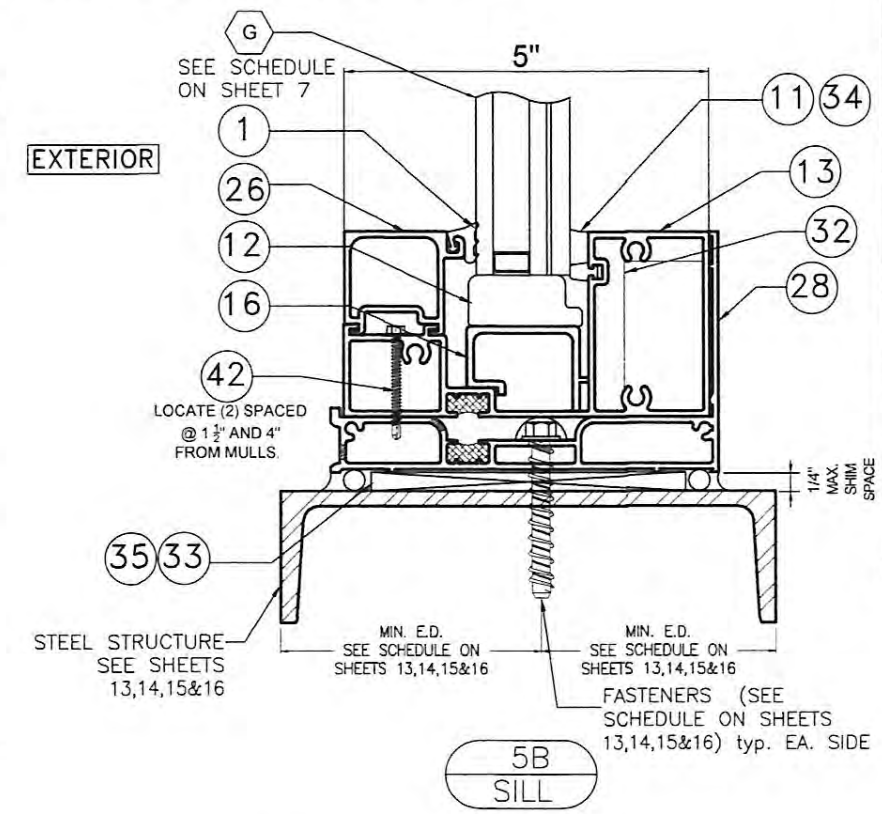

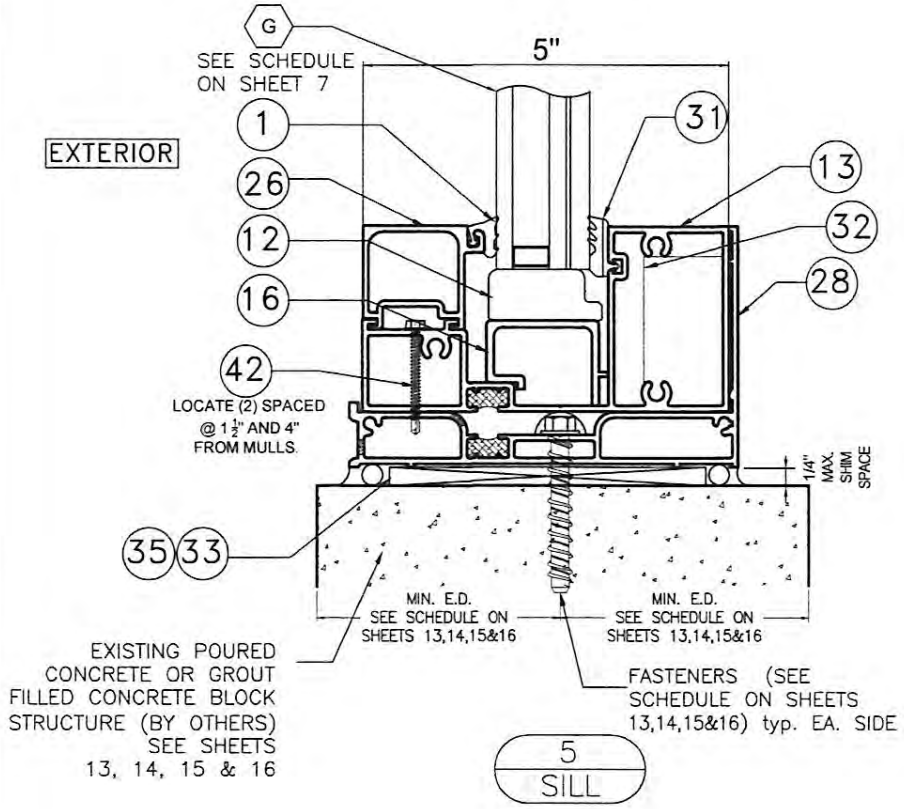

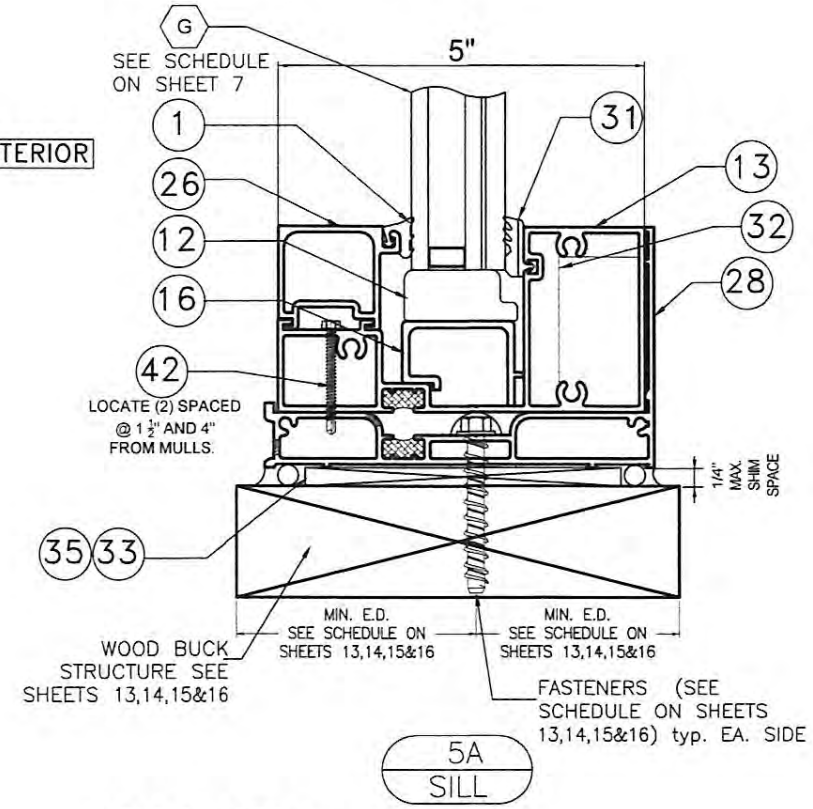

DRY GLAZED

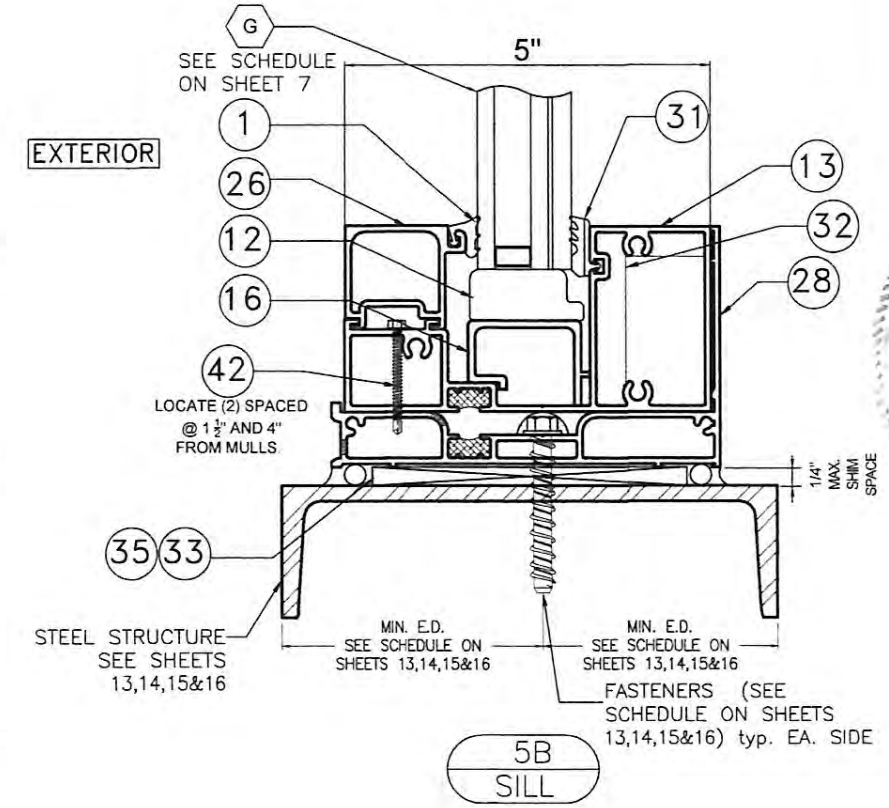

TEXAS DEPARTMENT OF INSURANCE - 2006

SERIES FG-5100T
HURRICANE RESISTANT
THERMAL STOREFRONT SYSTEM

Oldcastle BuildingEnvelope™
803 AIRPORT RD. TERRELL TX 75160
www.OldcastleBE.com-Phone 800-869-4567

REV. No.	DATE	DESCRIPTION	REV. No.	DATE	DESCRIPTION
1			3		
2			4		

DRAWN BY: F.R.L.
DATE 2/3/17
DRAWING No 17-011
SHEET 21 OF 28

WALTER A. TILLIT Jr P.E.
PROFESSIONAL ENGINEER
6355 N.W 36 STREET, STE. 305
VIRGINIA GARDENS, FL 33166
PHONE(305) 871-1531 FAX (305) 871-1531
TEXAS LIC. # 90691
FIRM REGISTRATION # F-13790

11/16/17

P.E. SEAL/SIGNATURE/DATE

CONNECTION DETAILS FOR STANDARD/JAMB MULLION & HORIZONTAL

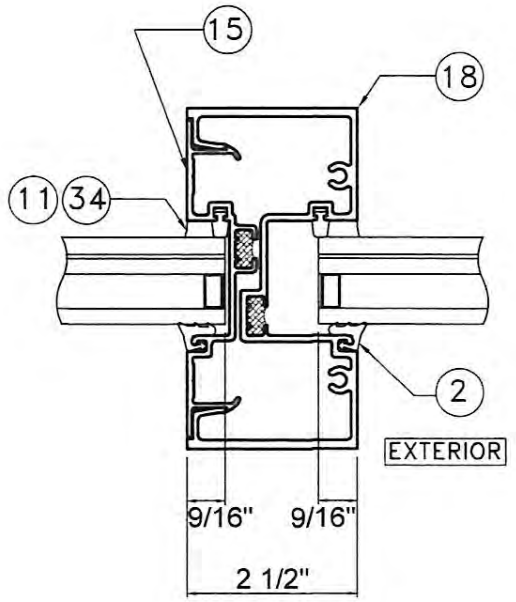

6
VERTICAL

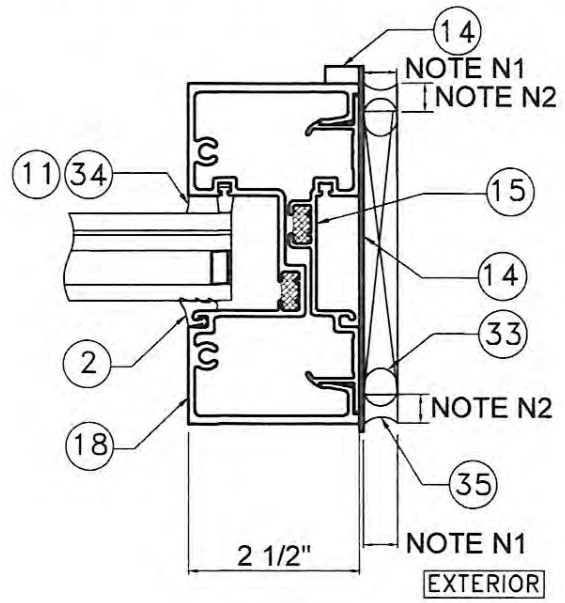

7
JAMB

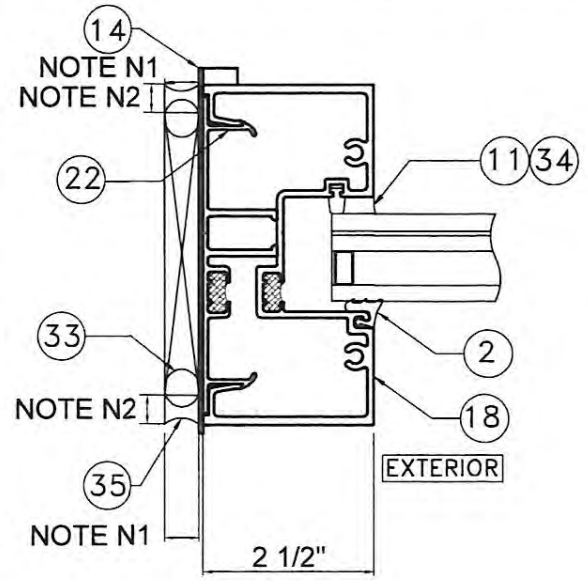

7A
JAMB

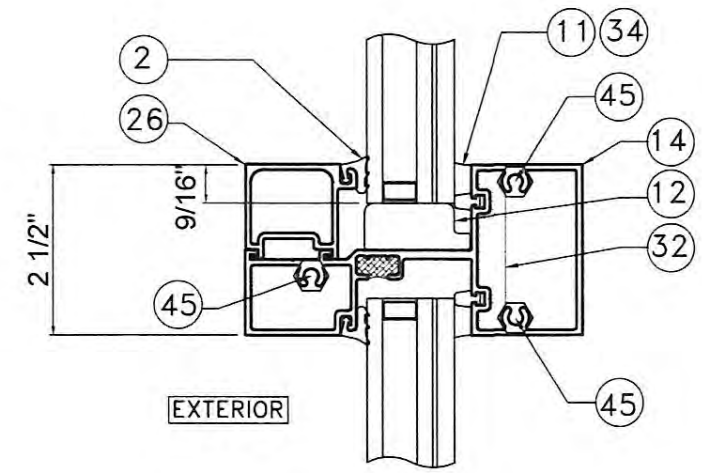

8
HORIZONTAL MULLION

WET GLAZED

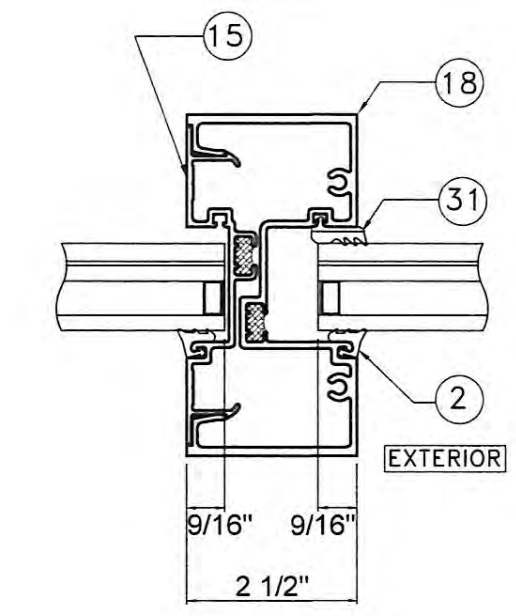

6
VERTICAL

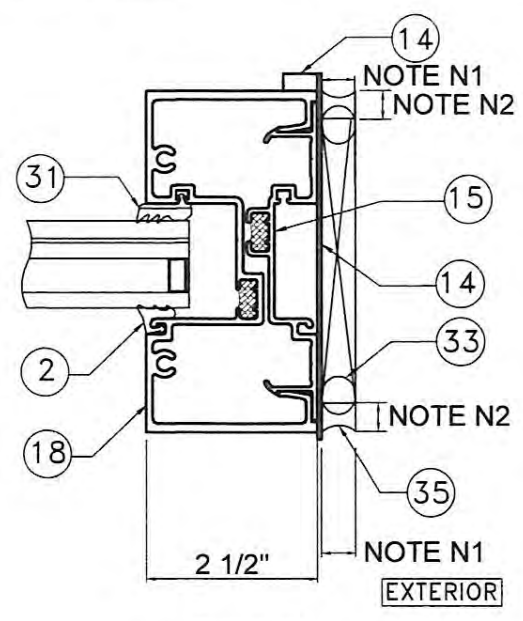

7
JAMB

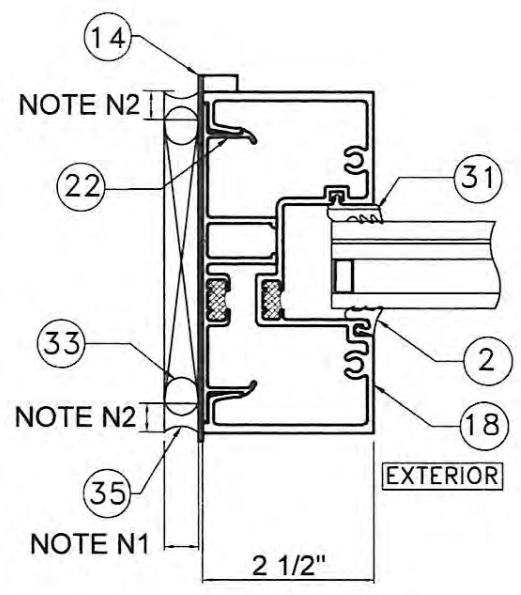

7A
JAMB

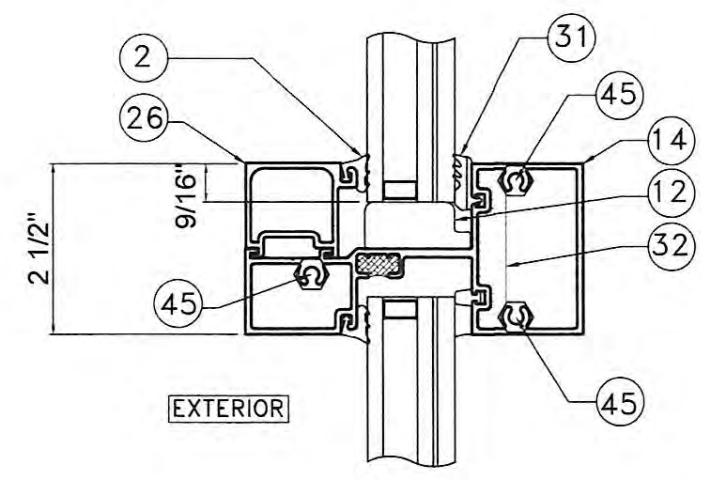

8
HORIZONTAL MULLION

DRY GLAZED

SEALANT JOINT NOTES *

N1 : 1/2" MIN. & 1 3/4" MAX. WIDE JOINT W/ SEALANT (34)

N2 : 1/4" MIN. & 3/8" MAX. DEPTH JOINT W/ 1/4" DEPTH AT MIDWIDTH OF JOINT W/ SEALANT (35)

* INDICATED MAXIMUM AND MINIMUM VALUES FOR SPECIFIED SEALANT VERTICAL JOINT WIDTH AT JAMBS PER NOTES N1 & N2 HAVE BEEN DETERMINED ONLY TAKING INTO CONSIDERATION THE ACTUAL MOVEMENT OF GLASS WALL AT JAMBS DUE TO THERMAL, WIND AND ITS OWN CONSTRUCTION TOLERANCE, AND NOT PERFORMANCE FACTORS FROM THE SURROUNDING STRUCTURE.

TEXAS DEPARTMENT OF INSURANCE - 2006

SERIES FG-5100T
HURRICANE RESISTANT
THERMAL STOREFRONT SYSTEM

Oldcastle BuildingEnvelope™
803 AIRPORT RD. TERRELL TX 75160
www.OldcastleBE.com-Phone 800-869-6567

REV. No.	DESCRIPTION	DATE	REV. No.	DESCRIPTION	DATE
1			3		
2			4		

DRAWN BY: F.R.L 2/3/17
DATE
17-011
DRAWING No
SHEET 22 OF 28

WALTER A. TILLIT Jr P.E.
PROFESSIONAL ENGINEER
6355 N.W 36 STREET, STE. 305
VIRGINIA GARDENS, FL 33166
PHONE(305) 871-1530 FAX (305) 871-1531
TEXAS LIC. # 90691
FIRM REGISTRATION # F-13790

STATE OF TEXAS
11/6/17
P.E. SEAL/SIGNATURE/DATE

CONNECTION DETAILS FOR STANDARD/JAMB MULLION

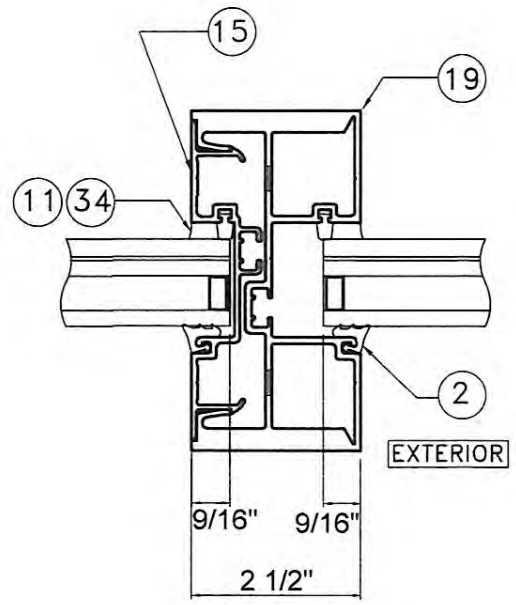

9
VERTICAL

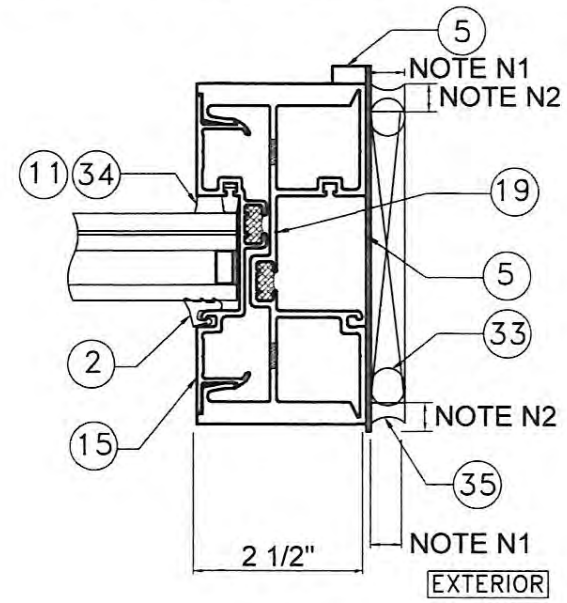

9A
JAMB

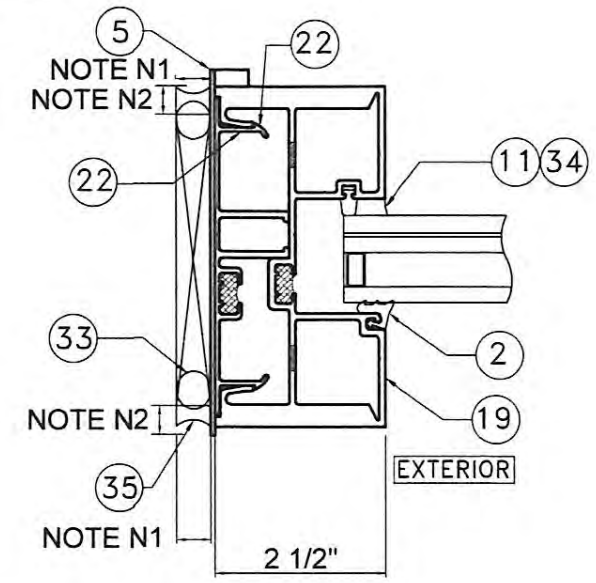

9B
JAMB

WET GLAZED

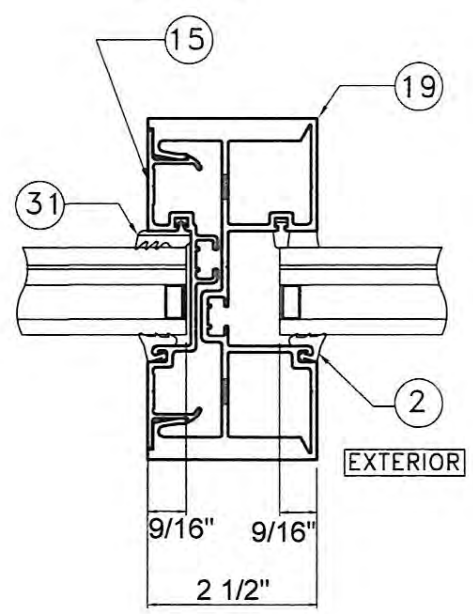

9
VERTICAL

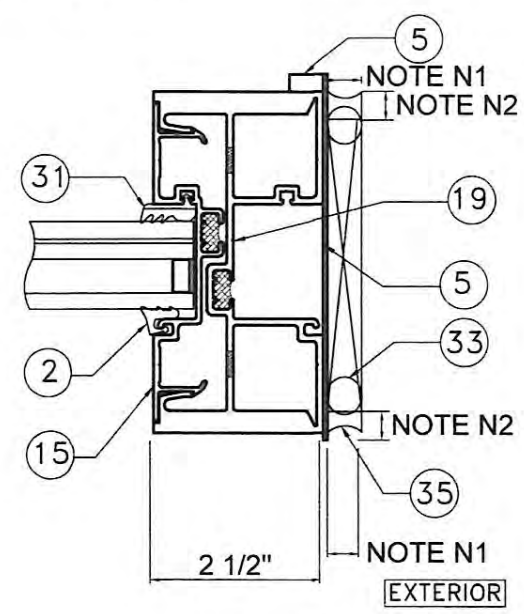

9A
JAMB

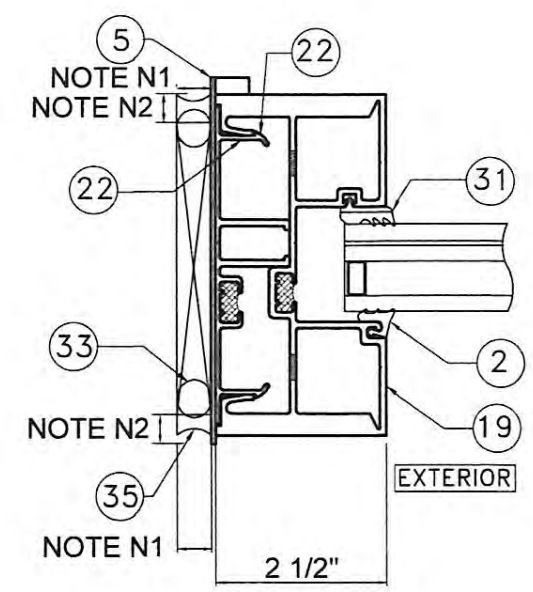

9B
JAMB

DRY GLAZED

SEALANT JOINT NOTES *

N1 : 1/2" MIN. & 1 3/4" MAX. WIDE JOINT W/ SEALANT (34)

N2 : 1/4" MIN. & 3/8" MAX. DEPTH JOINT W/ 1/4" DEPTH AT MIDWIDTH OF JOINT W/ SEALANT (35)

* INDICATED MAXIMUM AND MINIMUM VALUES FOR SPECIFIED SEALANT VERTICAL JOINT WIDTH AT JAMBS PER NOTES N1 & N2 HAVE BEEN DETERMINED ONLY TAKING INTO CONSIDERATION THE ACTUAL MOVEMENT OF GLASS WALL AT JAMBS DUE TO THERMAL, WIND AND ITS OWN CONSTRUCTION TOLERANCE, AND NOT PERFORMANCE FACTORS FROM THE SURROUNDING STRUCTURE.

TEXAS DEPARTMENT OF INSURANCE – 2006

SERIES FG-5100T
HURRICANE RESISTANT
THERMAL STOREFRONT SYSTEM

OldcastleBuildingEnvelope™
803 AIRPORT RD. TERRELL TX 75160
www.OldcastleBE.com-Phone 800-869-4567

DRAWN BY: F.R.L
DATE 2/3/17
17-011
DRAWING No
SHEET 23 OF 28

REV. No.	DATE	DESCRIPTION	REV. No.	DATE	DESCRIPTION
1			3		
2			4		

WALTER A. TILLIT Jr P.E.
PROFESSIONAL ENGINEER
6355 N.W 36 STREET, STE. 305
VIRGINIA GARDENS, FL 33166
PHONE(305) 871-1530 FAX (305) 871-1531
TEXAS LIC. # 90691
FIRM REGISTRATION # F-13790

STATE OF TEXAS
WALTER A. TILLIT
90691
LICENSED
PROFESSIONAL ENGINEER
11/14/17
P.E. SEAL/SIGNATURE/DATE

CORNER & EXPANSION MULLIONS DETAILS

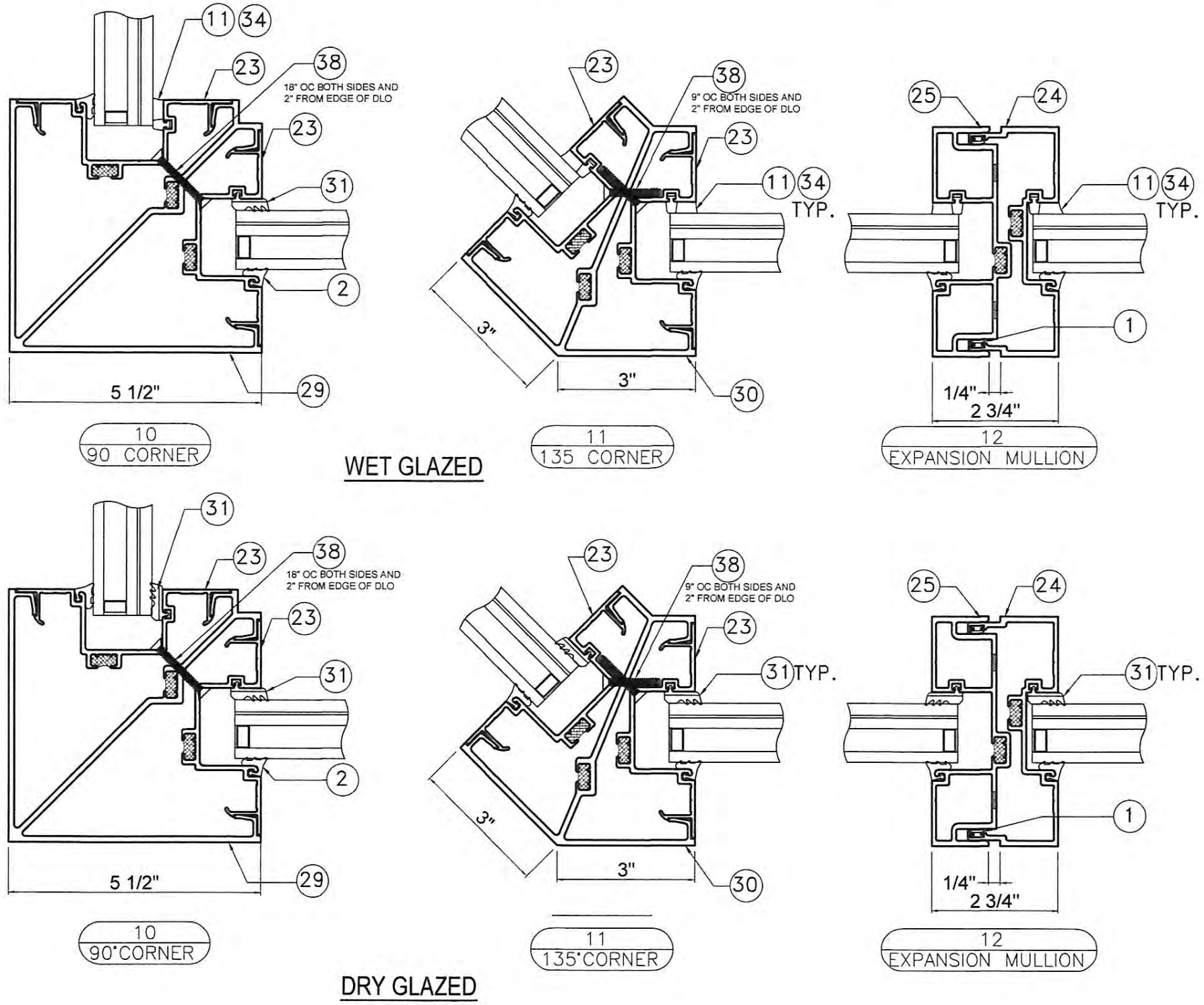

TEXAS DEPARTMENT OF INSURANCE – 2006

SERIES FG-5100T
HURRICANE RESISTANT
THERMAL STOREFRONT SYSTEM

Oldcastle BuildingEnvelope
803 AIRPORT RD. TERRELL, TX 75160
www.OldcastleBE.com-Phone 800-869-4507

REV. No.	DESCRIPTION	DATE	REV. No.	DESCRIPTION	DATE
1			3		
2			4		

DRAWN BY: F.R.L
DATE 2/3/17
DRAWING No 17-011
SHEET 24 OF 28

WALTER A. TILLIT Jr P.E.
PROFESSIONAL ENGINEER
6355 N.W 36 STREET, STE. 305
VIRGINIA GARDENS, FL 33166
PHONE(305) 871-1530 FAX (305) 871-1531
TEXAS LIC. # 90691
FIRM REGISTRATION # F-13790

HEAD CONNECTION DETAILS AT TRANSOM AT DOOR

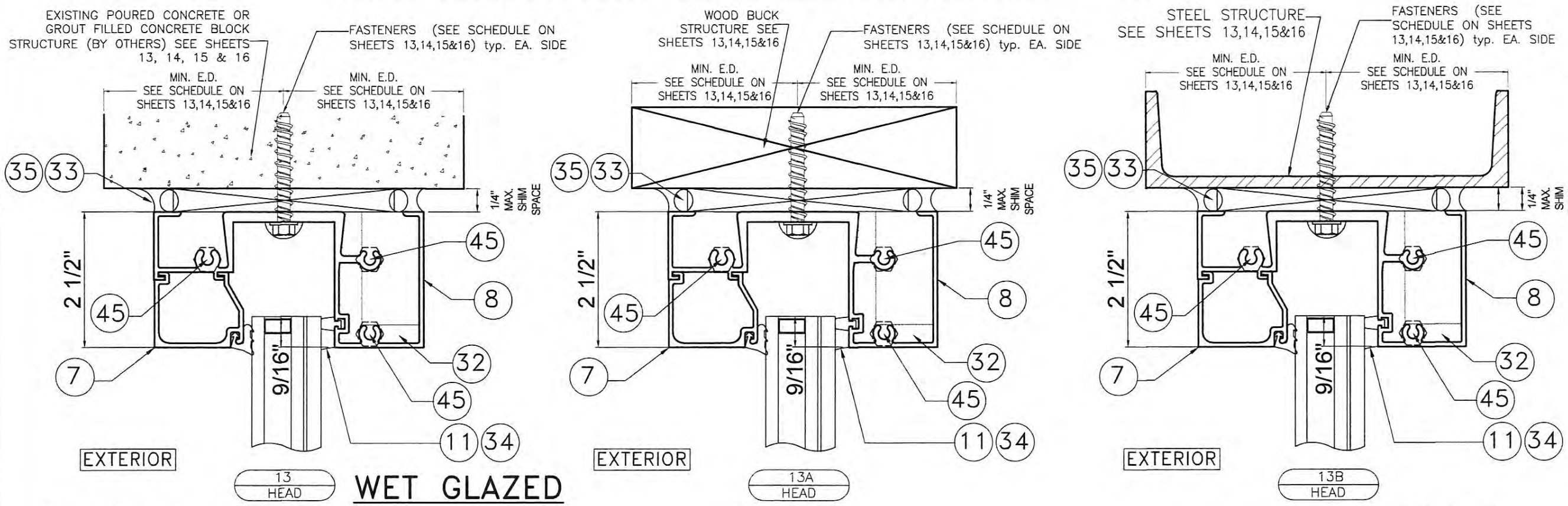

WET GLAZED

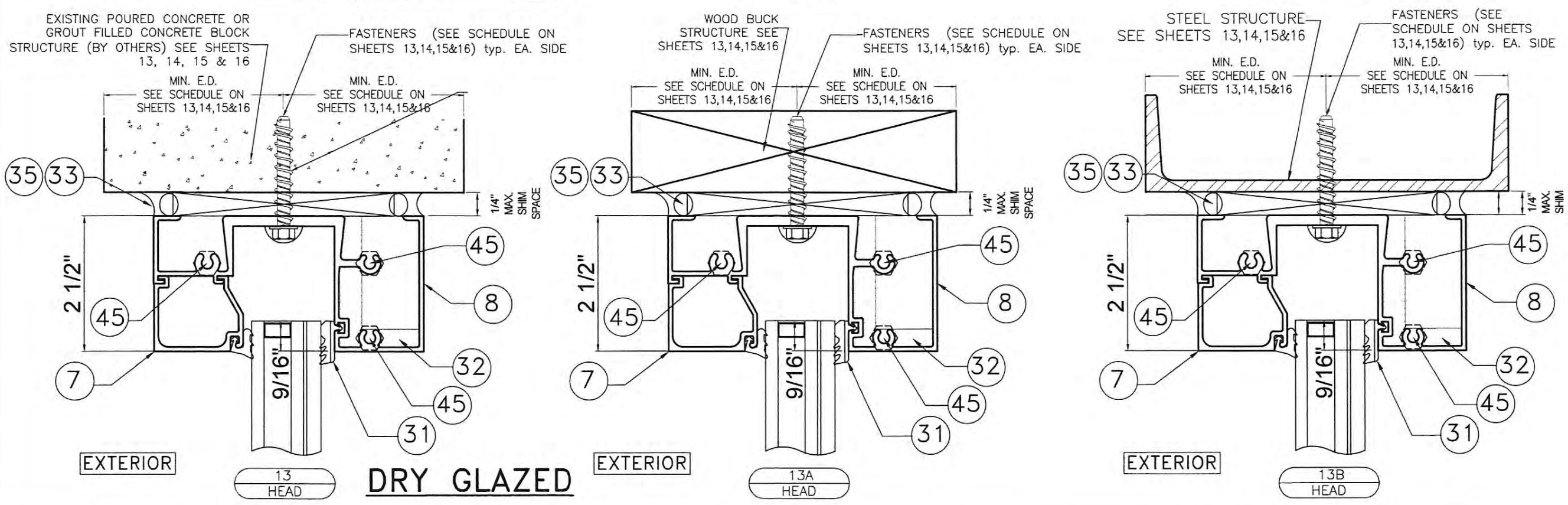

DRY GLAZED

TEXAS DEPARTMENT OF INSURANCE – 2006

SERIES FG-5100T
HURRICANE RESISTANT
THERMAL STOREFRONT SYSTEM

DRAWN BY: F.R.L.
2/3/17
DATE

17-011
DRAWING No

SHEET 25 OF 28

OldcastleBuildingEnvelope™
803 AIRPORT RD. TERRELL TX 75160
www.OldcastleBE.com-Phone 800-869-4567

REV. No.	DATE	DESCRIPTION	REV. No.	DATE	DESCRIPTION
1			3		
2			4		

WALTER A. TILLIT Jr P.E.
PROFESSIONAL ENGINEER
6355 N.W. 36 STREET, STE. 305
VIRGINIA GARDENS, FL 33166
PHONE(305) 871-1530 FAX (305) 871-1531
TEXAS LIC. # 90691
FIRM REGISTRATION # F-13790

STATE OF TEXAS
WALTER A. TILLIT
90691
LICENSED
PROFESSIONAL ENGINEER
11/6/17
P.E. SEAL/SIGNATURE/DATE

SILL CONNECTION DETAILS AT TRANSOM AT DOOR + THRESHOLD DETAIL AT DOOR

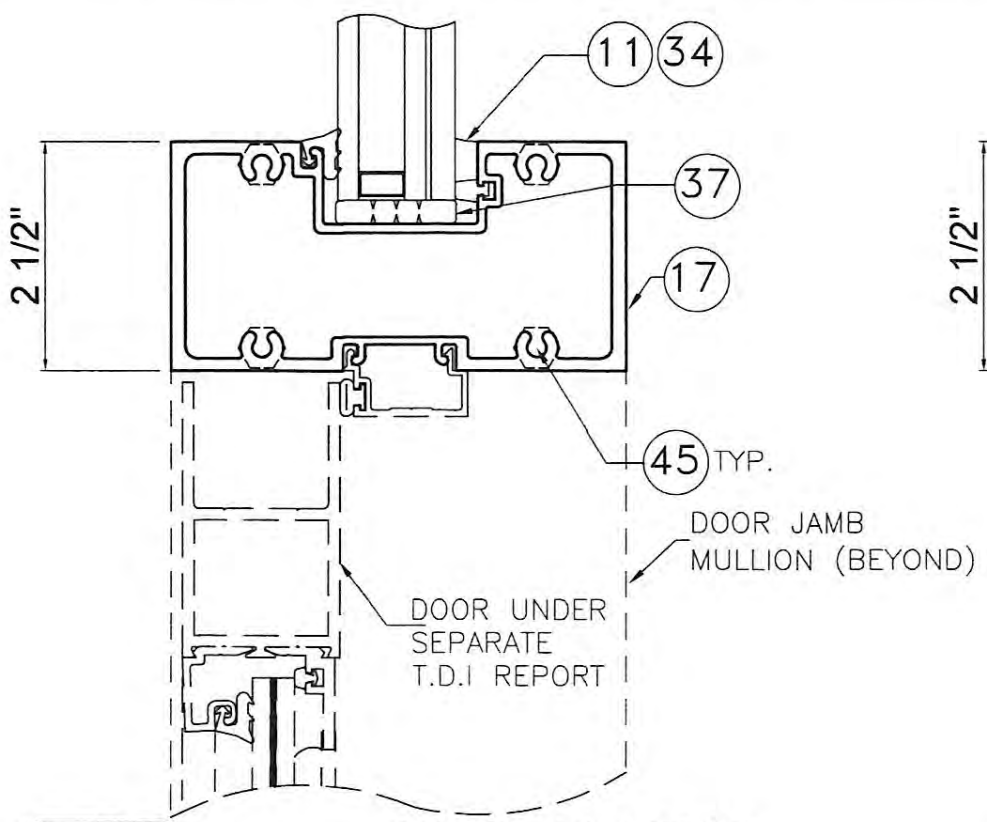

14
TRANSOM

WET GLAZED

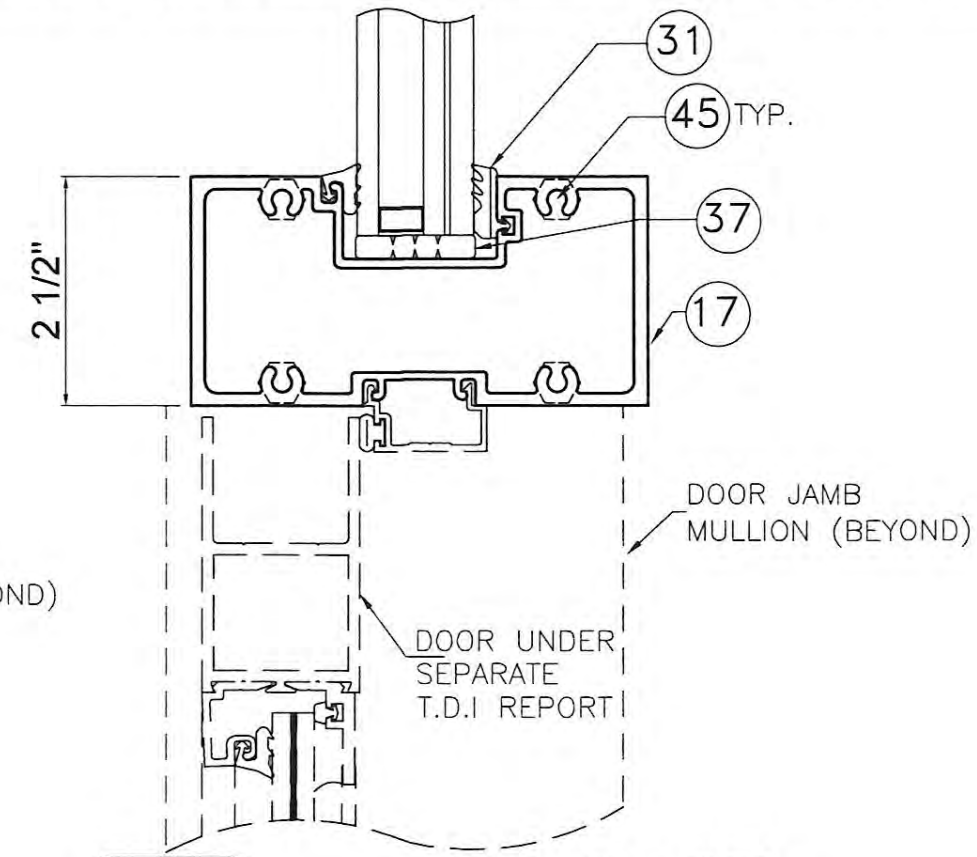

14
TRANSOM

DRY GLAZED

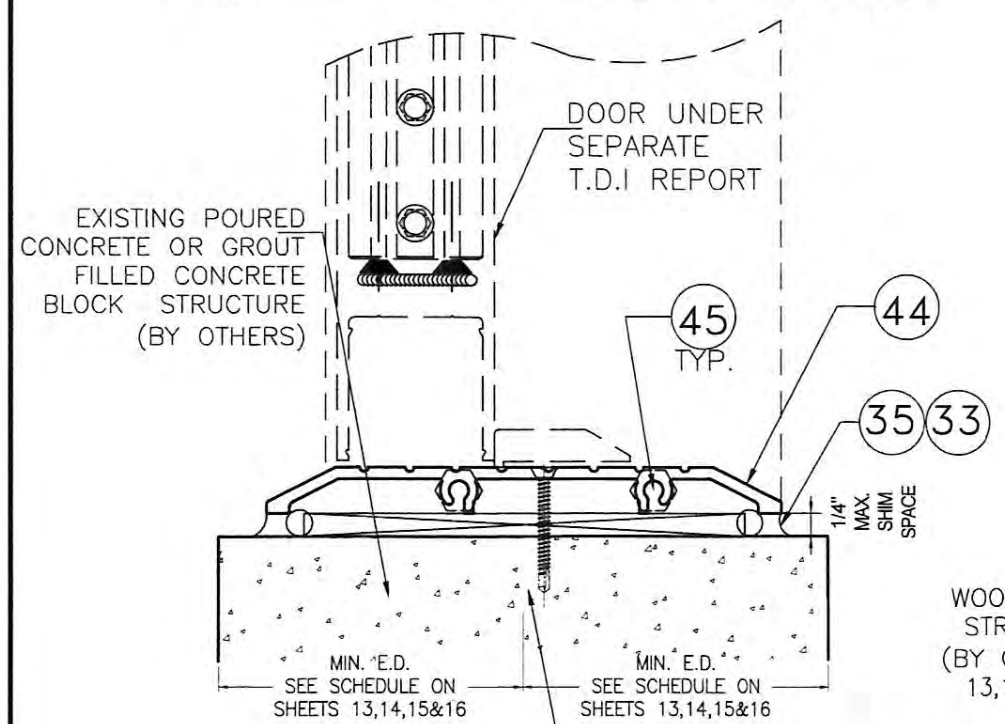

17
THRESHOLD

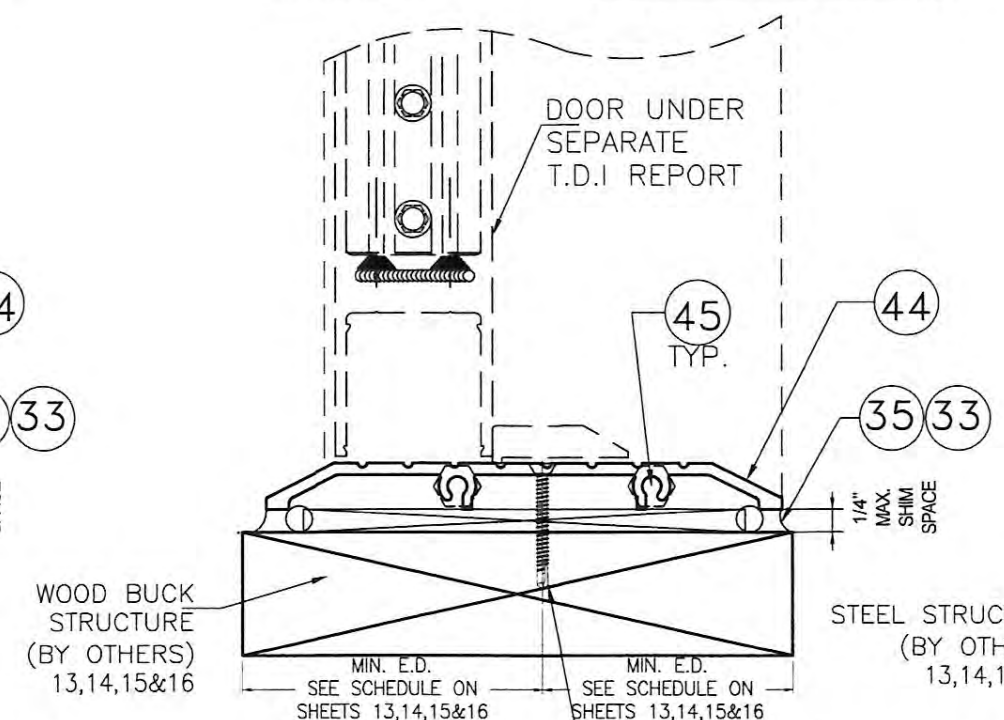

17A
THRESHOLD

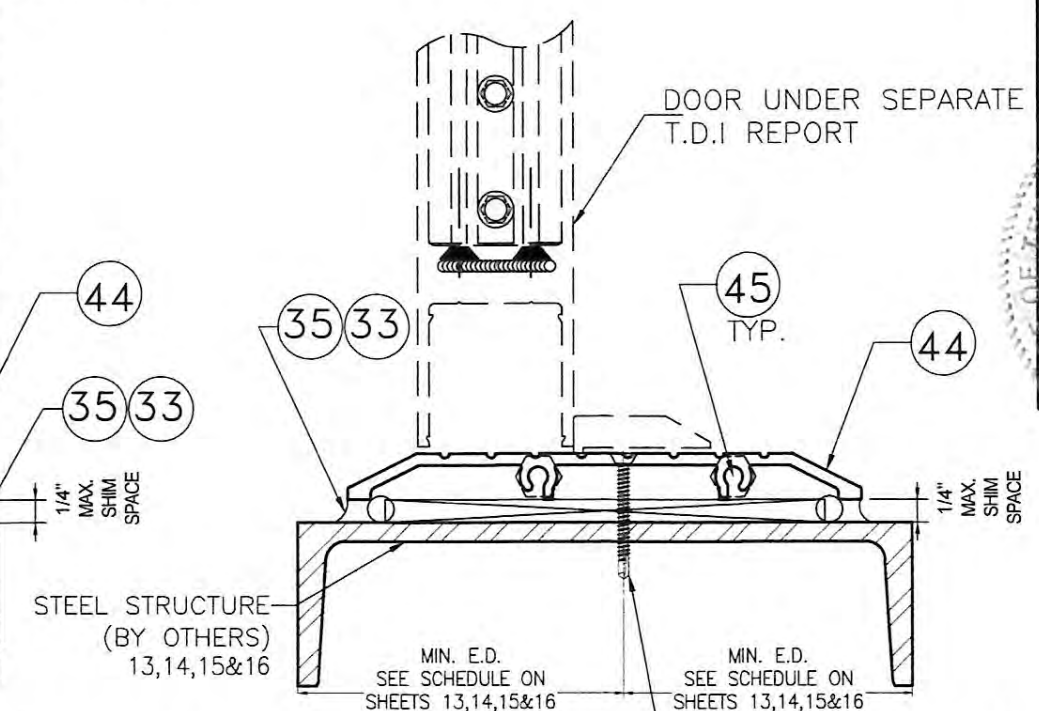

17B
THRESHOLD

TEXAS DEPARTMENT OF INSURANCE – 2006

SERIES FG-5100T
HURRICANE RESISTANT
THERMAL STOREFRONT SYSTEM

OldcastleBuildingEnvelope
803 AIRPORT RD. TERRELL TX 75160
www.OldcastleBE.com-Phone 800-869-4567

DRAWN BY: F.R.L.
DATE 2/3/17
DRAWING No 17-011
SHEET 26 OF 28

REV. No.	DESCRIPTION	DATE	REV. No.	DESCRIPTION	DATE
1			3		
2			4		

WALTER A. TILLIT Jr P.E.
PROFESSIONAL ENGINEER
6355 N.W 36 STREET, STE. 305
VIRGINIA GARDENS, FL 33166
PHONE(305) 871-1531 FAX (305) 871-1531
TEXAS LIC. # 90691
FIRM REGISTRATION # F-13790

STATE OF TEXAS
WALTER A. TILLIT
90691
LICENSED
PROFESSIONAL ENGINEER

11/16/17

P.E. SEAL/SIGNATURE/DATE

DOOR JAMB MULLION DETAILS AT DOOR & TRANSOM

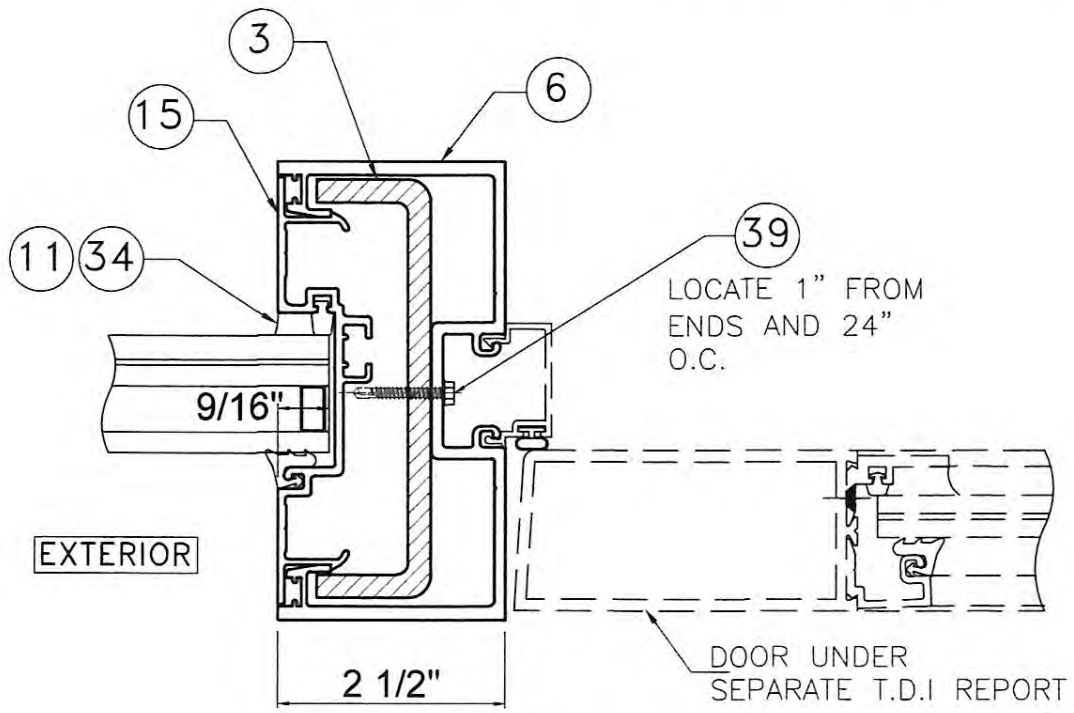

15 JAMB

WET GLAZED

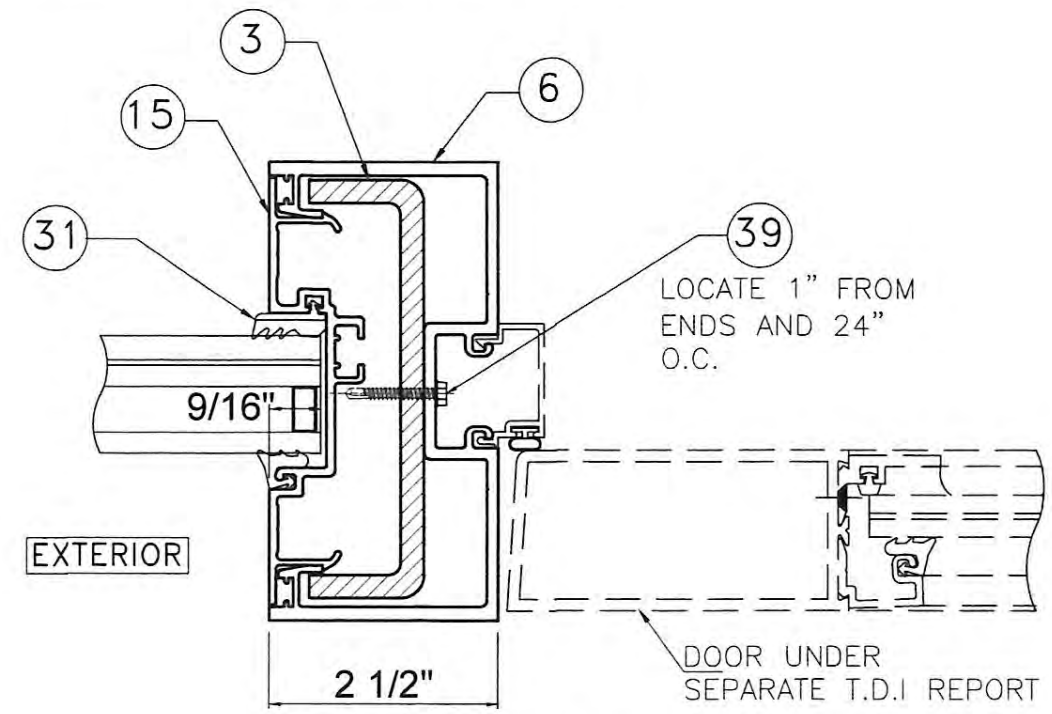

15 JAMB

DRY GLAZED

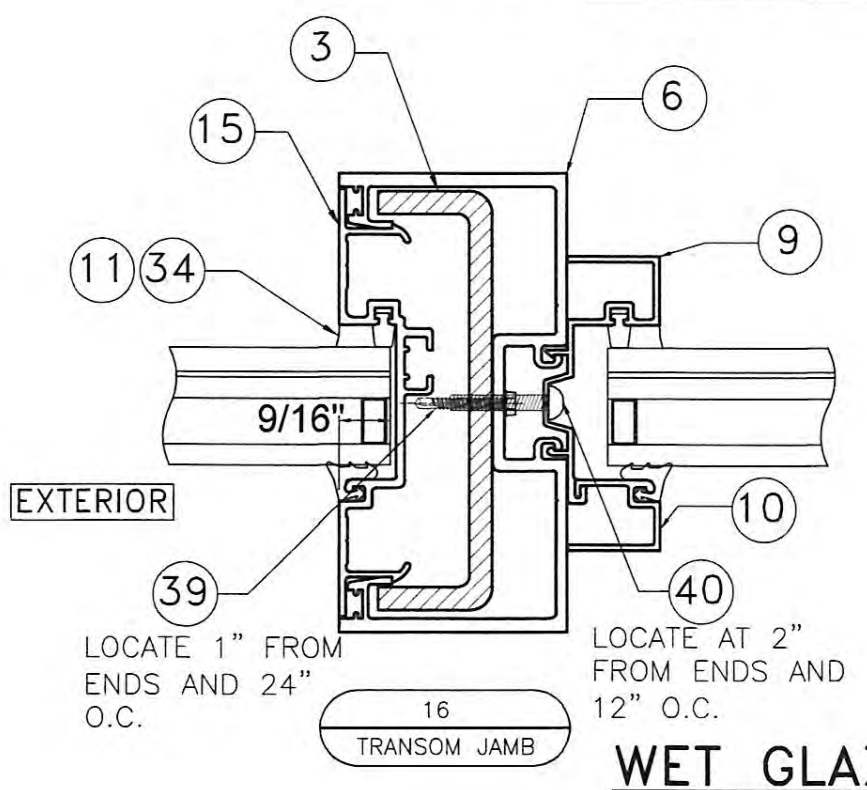

16 TRANSOM JAMB

WET GLAZED

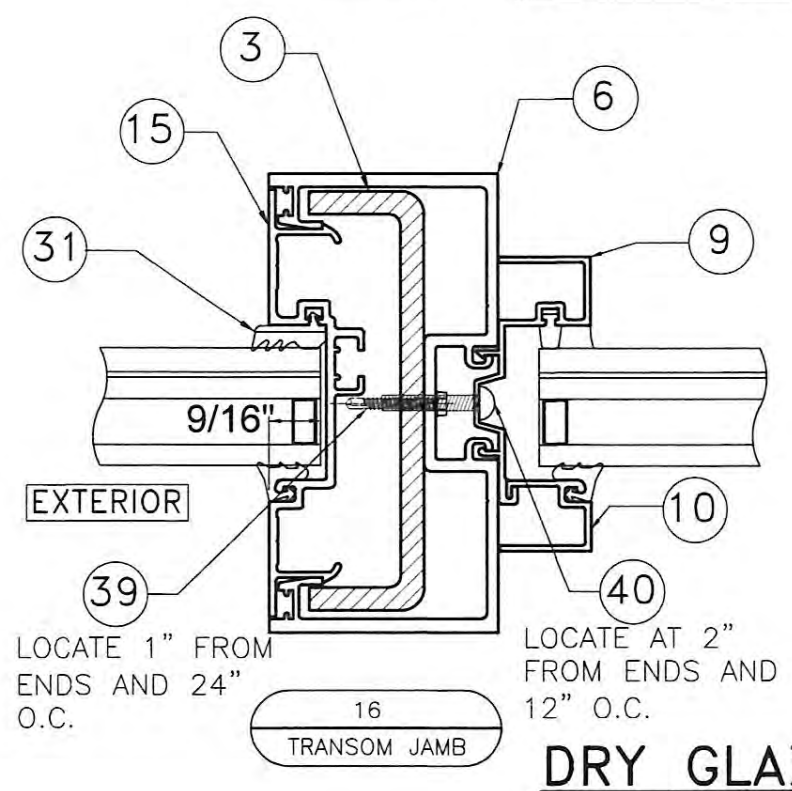

16 TRANSOM JAMB

DRY GLAZED

TEXAS DEPARTMENT OF INSURANCE – 2006

SERIES FG-5100T
HURRICANE RESISTANT
THERMAL STOREFRONT SYSTEM

Oldcastle BuildingEnvelope
803 AIRPORT RD. TERRELL TX 75160
www.OldcastleBE.com-Phone 800-869-4567

DRAWN BY: F.R.L
DATE 2/3/17
17-011 DRAWING No
SHEET 27 OF 28

REV. No	DESCRIPTION	DATE	REV. No	DESCRIPTION	DATE
1			3		
2			4		

WALTER A. TILLIT Jr P.E.
PROFESSIONAL ENGINEER
6355 N.W 36 STREET, STE. 305
VIRGINIA GARDENS, FL 33166
PHONE(305) 871-1531 FAX (305) 871-1531
TEXAS LIC. # 90691
FIRM REGISTRATION # F-13790

STATE OF TEXAS
WALTER A. TILLIT
90691
LICENSED
PROFESSIONAL ENGINEER

11/6/17

P.E. SEAL/SIGNATURE/DATE

HEADER & SILL CONNECTION TO JAMB MULLION

NTS

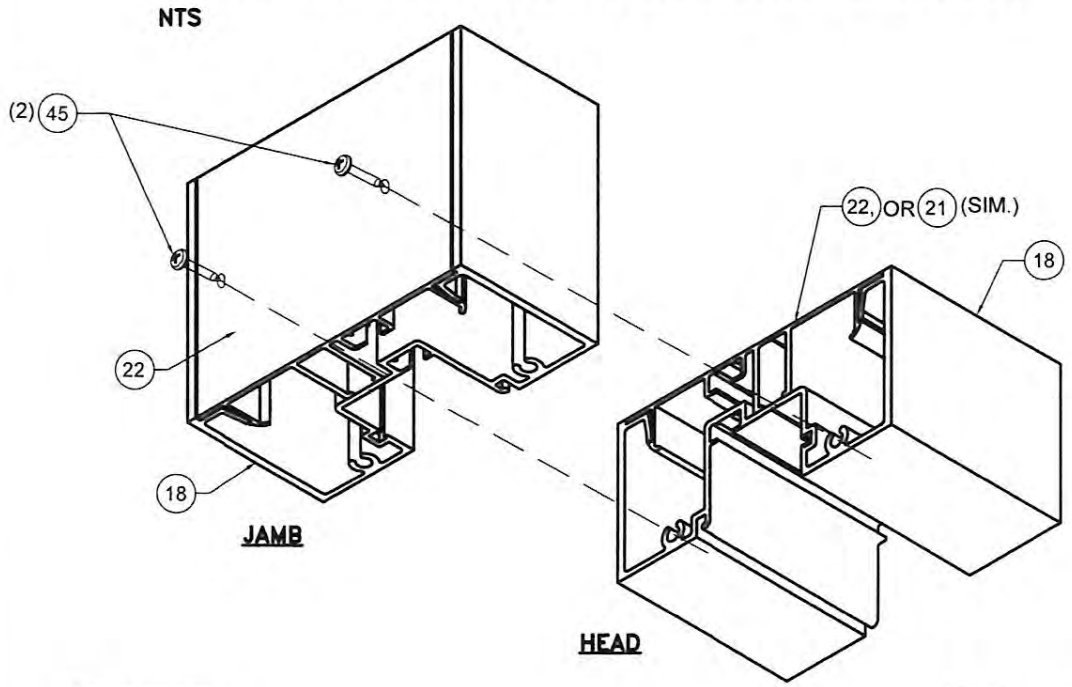

HORIZONTAL CONNECTION TO STANDARD OR DOOR JAMB MULLIONS (CONNECTION TO JAMB MULLION IS SIMILAR)

NTS

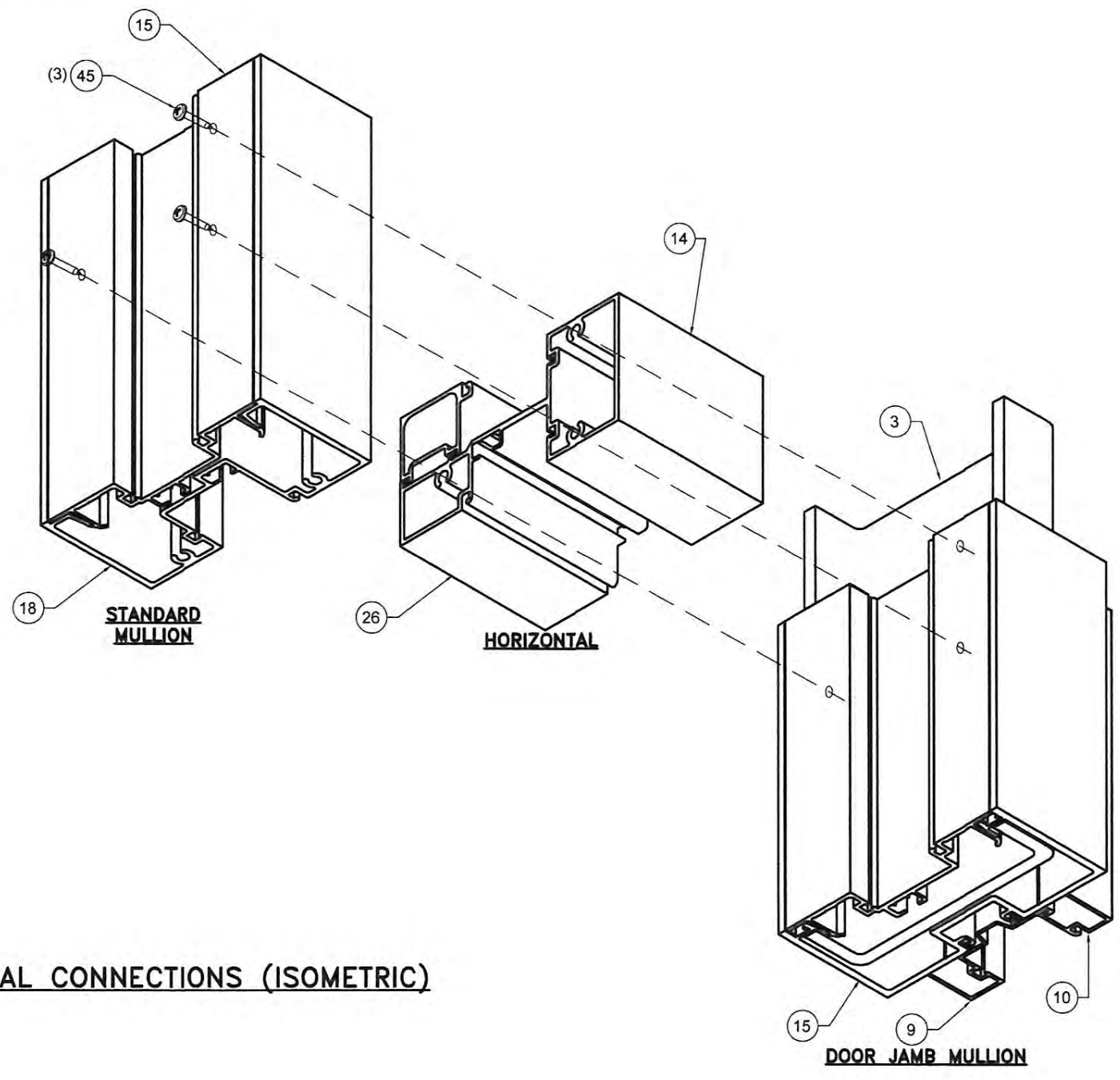

EXTERIOR

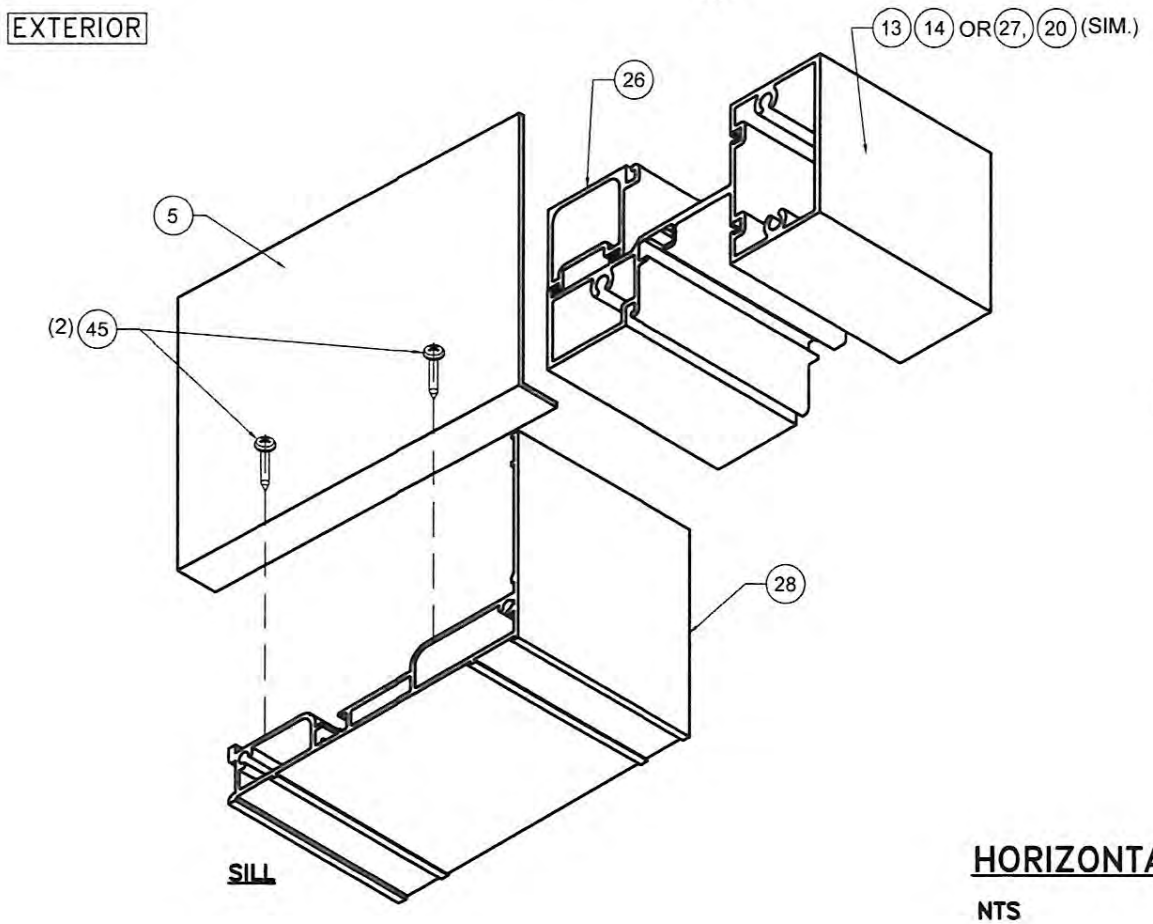

HORIZONTAL CONNECTIONS (ISOMETRIC)

NTS

TEXAS DEPARTMENT OF INSURANCE – 2006

SERIES FG-5100T
HURRICANE RESISTANT
THERMAL STOREFRONT SYSTEM

Oldcastle BuildingEnvelope®
803 AIRPORT RD. TERRELL TX 75160
www.OldcastleBE.com • Phone 800-869-4567

DRAWN BY: F.R.L
DATE 2/3/17

17-011
DRAWING No

SHEET 28 OF 28

REV. No	DESCRIPTION	DATE	REV. No	DESCRIPTION	DATE
1			3		
2			4		

WALTER A. TILLIT Jr P.E.
PROFESSIONAL ENGINEER
6355 N.W 36 STREET, STE. 305
VIRGINIA GARDENS, FL 33166
PHONE(305) 871-1530 FAX (305) 871-1531
TEXAS LIC. # 90691
FIRM REGISTRATION # F-13790

STATE OF TEXAS
90691
LICENSED
PROFESSIONAL ENGINEER

P.E. SEAL/SIGNATURE/DATE