ASSOCIATED MATERIALS
INCORPORATED
3773 STATE ROAD
CUYAHOGA FALLS, OH 44223

MODEL 0953
PVC FIXED OVER AWNING WINDOW
w/ INTEGRAL MULLION
"NON-IMPACT"

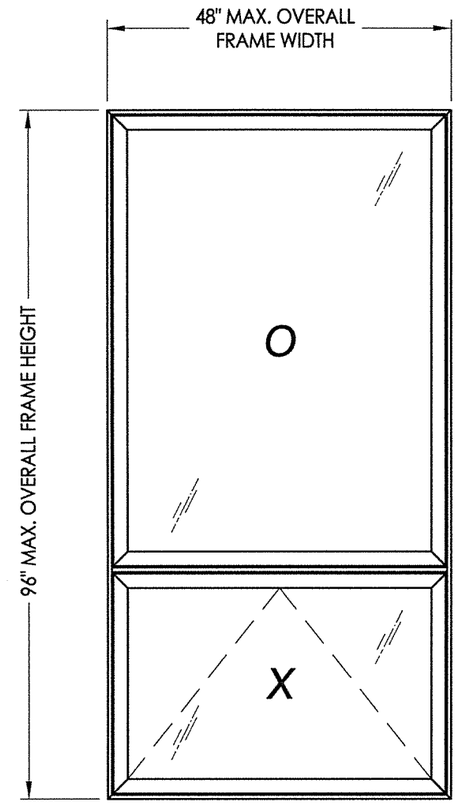

EVALUATED FOR USE IN THE STATE OF TEXAS

The Awning Window described herein complies with the 2018 International Residential Code (IRC), Sections R301 & R609 and the 2018 International Building Code (IBC), Sections 1404.13, 1609, 1709.5, 2403 and 2404 subject to the following conditions:

1. Anchors shall be as listed and spaced as shown in the details. Anchor embedment to base material shall be beyond wall dressing or stucco.
2. When used in areas requiring wind-borne debris protection this product is required to be protected with an impact resistant covering that complies with Section R301.2.1.2 of the IRC and Section 1609.2 of the IBC.
3. Allowable design pressure requirements must be equal to or less than the design pressure rating shown in the design pressure chart, sheet 1 of this drawing.
4. Conditions not covered by this drawing are subject to further engineering analysis.

OVERALL FRAME DIMENSION	VENT D.L.O. DIMENSION	FIXED D.L.O. DIMENSION	GLASS TYPE	DESIGN PRESSURE (PSF)	
				POSITIVE	NEGATIVE
48.0" x 96.0"	42.5" x 26.75"	42.5" x 58.75"	G1	+25.0	-25.0
48.0" x 72.0"	42.5" x 18.75"	42.5" x 42.75"		+40.0	-40.0
36.0" x 72.0"	30.5" x 18.75"	30.5" x 42.75"		+40.0	-45.0
24.0" x 60.0"	18.5" x 14.75"	18.5" x 34.75"		+40.0	-85.0

TABLE OF CONTENTS

SHEET#	DESCRIPTION
1	Typical elevations, design pressures & general notes
2	Vertical & horizontal cross sections & frame anchoring
3	Bill of materials, glazing details and components

STATE OF TEXAS
LYNDON F. SCHMIDT
104123
LICENSED PROFESSIONAL ENGINEER
9.7.21

Documents Prepared By: Lyndon F. Schmidt, P.E.
TEXAS P.E. #104123
RW BUILDING CONSULTANTS, INC.
P.O. Box 230 Valrico FL. 33595
Phone No.: 813.659.9197
TEXAS BOARD OF PROFESSIONAL ENGINEERS
CERTIFICATE OF REGISTRATION # F-11852

PRODUCT: AWNING WINDOW

PART OR ASSEMBLY: TYPICAL ELEVATION, DESIGN PRESSURES & GENERAL NOTES

NO.	DATE	REVISIONS	BY

DATE: 9/07/21
SCALE: N.T.S.
DWG. BY: RW
CHK. BY: LFS
DRAWING NO.: TX-5128
SHEET 1 OF 3

© 2020 R.W. BUILDING CONSULTANTS INC.

Z:\Clients\Associated PERMANENT\B - Texas Dept of Ins\Awning\WIN-XXX Series 095X Awning\C - Drawings\TX-5127-28.dwg

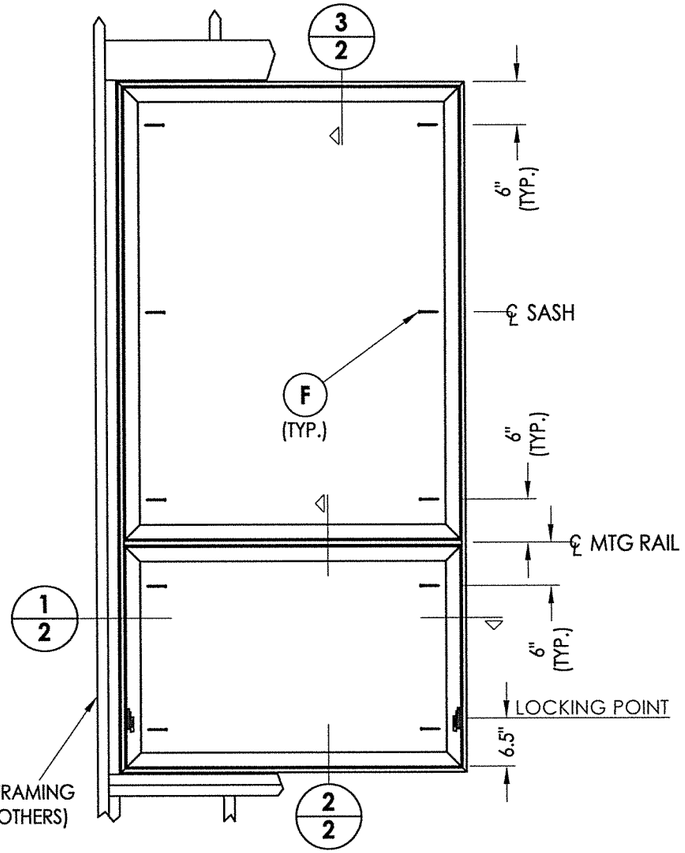

FRAME ANCHORING

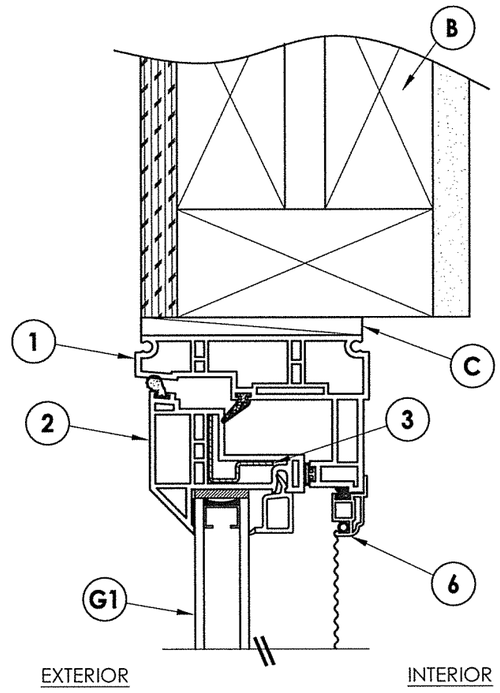

3/2 VERTICAL CROSS SECTION

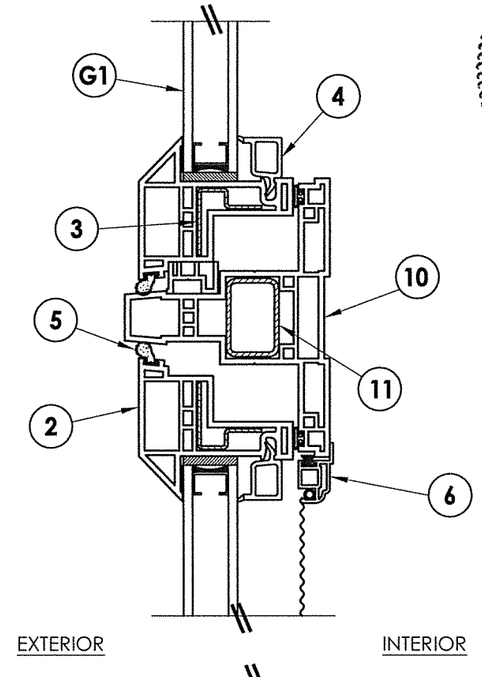

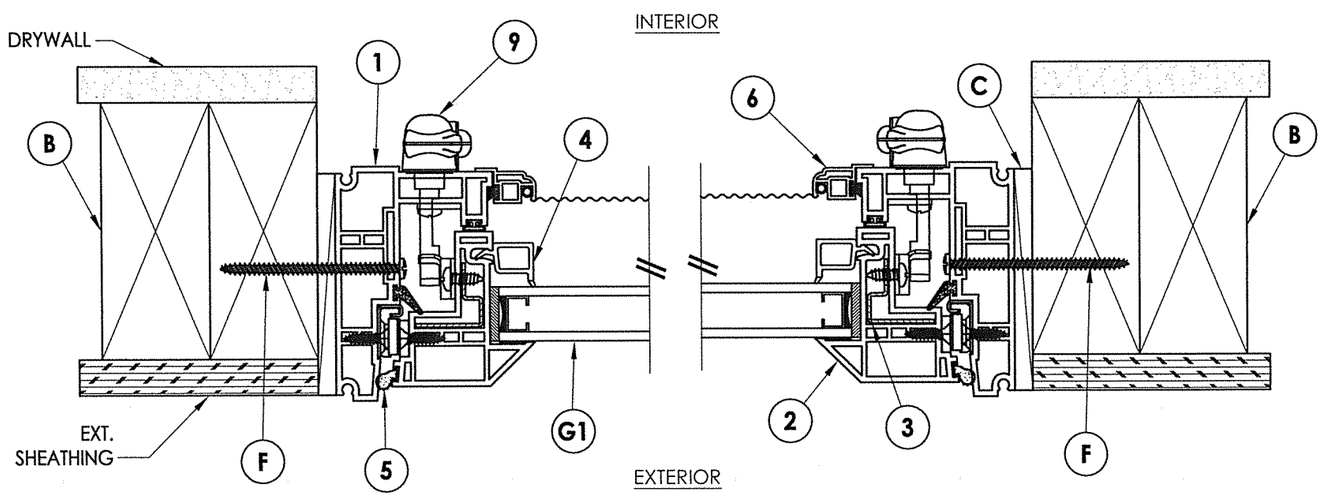

1/2 HORIZONTAL CROSS SECTION

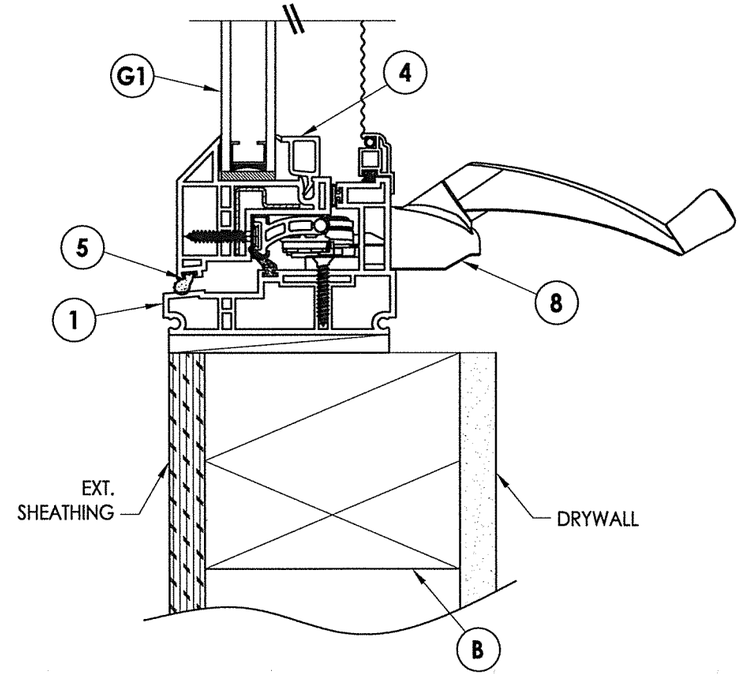

2/2 VERTICAL CROSS SECTION

STATE OF TEXAS
LYNDON F. SCHMIDT
104123
LICENSED PROFESSIONAL ENGINEER
9.7.21

Documents Prepared By: Lyndon F. Schmidt, P.E.
TEXAS P.E. #104123

RW BUILDING CONSULTANTS, INC.
P.O. Box 230 Valrico FL. 33595
Phone No.: 813.659.9197

TEXAS BOARD OF PROFESSIONAL ENGINEERS
CERTIFICATE OF REGISTRATION # F-11852

PRODUCT: AWNING WINDOW

PART OR ASSEMBLY: VERTICAL & HORIZONTAL CROSS SECTIONS & FRAME ANCHORING

NO.	DATE	REVISIONS	BY

DATE: 9/07/21
SCALE: N.T.S.
DWG. BY: RW
CHK. BY: LFS
DRAWING NO.: TX-5128
SHEET 2 OF 3

© 2020 R.W. BUILDING CONSULTANTS INC.

Z:\Clients\Associated PERMANENT\B - Texas Dept of Ins\Awning\WIN-XXX Series 095X Awning\C - Drawings\TX-5127-28.dwg

BILL OF MATERIALS

ITEM #	DESCRIPTION	MATERIAL
B	2X FRAMING (SG >= 0.42)	WOOD
C	1/4" MAX. SHIM SPACE	-
F	#8 X 2-1/2" PPH SMS (1-3/4" MIN. EMBEDMENT)	STEEL
1	MAIN FRAME*	RIGID PVC
2	SASH FRAME*	RIGID PVC
3	SASH REINFORCEMENT	STEEL
4	GLAZING BEAD*	RIGID PVC
5	WEATHERSTRIP	-
6	SCREEN	-
8	MAXIM AWNING OPERATOR BY TRUTH	-
9	LOCK HANDLE BY TRUTH	-
10	INTEGRAL MULLION*	RIGID PVC
11	MULLION REINFORCEMENT	STEEL

*THE APPROVED WHITE RIGID PVC EXTERIOR EXTRUSIONS FOR WINDOWS ARE TO BE PRODUCED BY EXTRUDERS LICENSEES IN "AAMA CERTIFICATION PROGRAMS FOR RIGID PVC EXTRUSIONS."

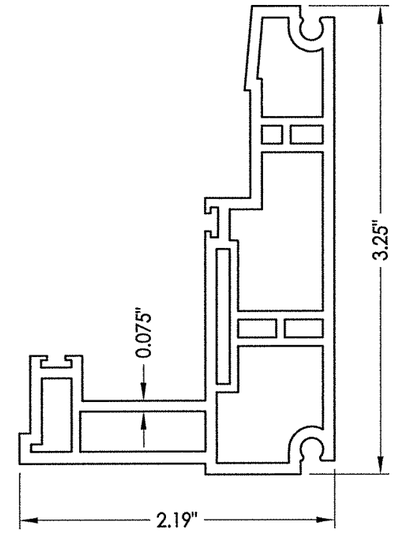

1 MAIN FRAME

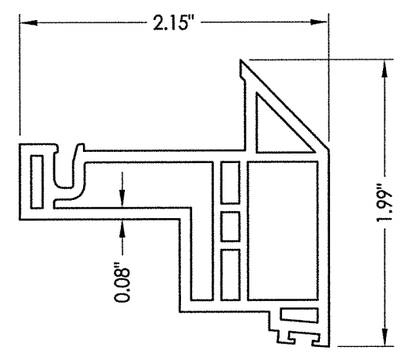

2 SASH FRAME

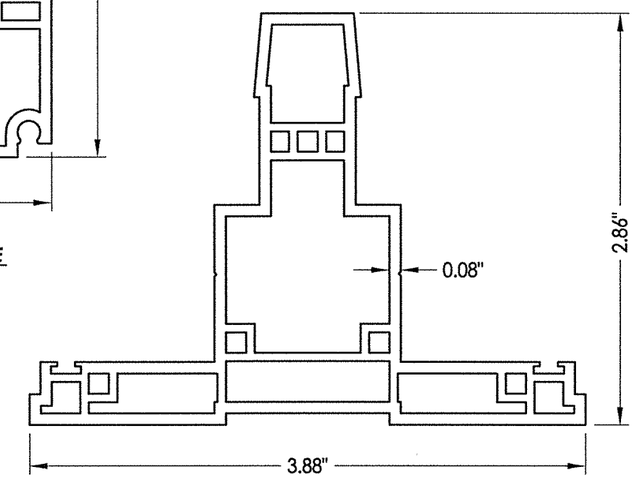

10 INTEGRAL MULLION

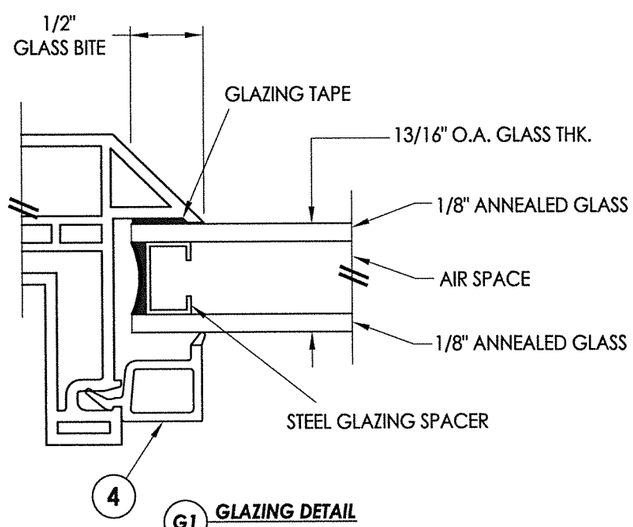

G1 GLAZING DETAIL

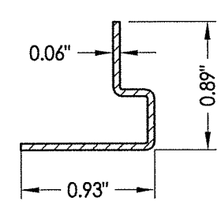

3 SASH REINFORCEMENT

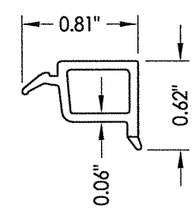

4 GLAZING BEAD

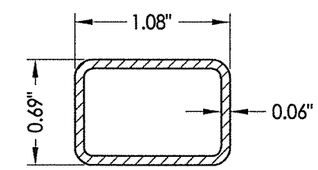

11 MULLION REINFORCEMENT

STATE OF TEXAS
LYNDON F. SCHMIDT
104123
LICENSED PROFESSIONAL ENGINEER
9.7.21

Documents Prepared By: Lyndon F. Schmidt, P.E.
TEXAS P.E. #104123

RW BUILDING CONSULTANTS, INC.
P.O. Box 230 Valrico FL. 33595
Phone No.: 813.659.9197

TEXAS BOARD OF PROFESSIONAL ENGINEERS
CERTIFICATE OF REGISTRATION # F-11852

PRODUCT: AWNING WINDOW

PART OR ASSEMBLY: BILL OF MATERIALS, GLAZING DETAIL & COMPONENTS

NO.	DATE	REVISIONS	BY

DATE: 9/07/21
SCALE: N.T.S.
DWG. BY: RW
CHK. BY: LFS
DRAWING NO.: TX-5128
SHEET 3 OF 3

© 2020 R.W. BUILDING CONSULTANTS INC.

Z:\Clients\Associated PERMANENT\B - Texas Dept of Ins\Awning\WIN-XXX Series 095X Awning\C - Drawings\TX-5127-28.dwg