ASSOCIATED MATERIALS
INCORPORATED
3773 STATE ROAD
CUYAHOGA FALLS, OH 44223

SERIES 1900 MODEL 1901 HP DOUBLE HUNG WINDOW w/ NAILING FIN

"NON-IMPACT"

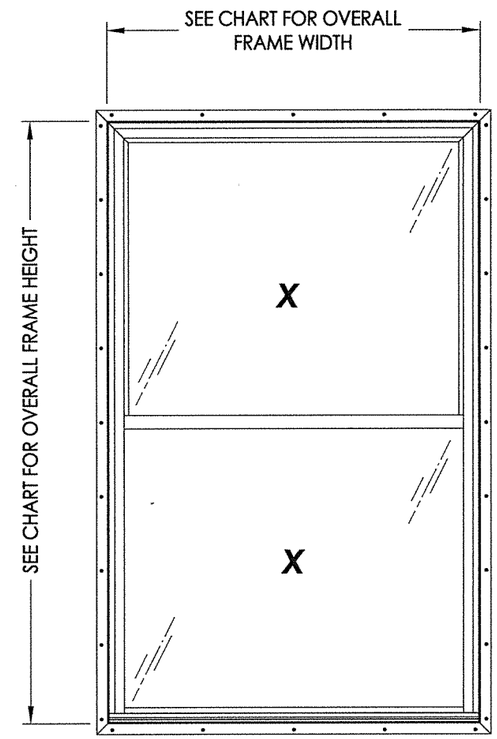

EVALUATED FOR USE IN THE STATE OF TEXAS

The Double Hung Window described herein complies with the 2018 International Residential Code (IRC), Sections R301 & R609 and the 2018 International Building Code (IBC), Sections 1404.13, 1609, 1709.5, 2403 and 2404 subject to the following conditions:

1. Anchors shall be as listed and spaced as shown in the details. Anchor embedment to base material shall be beyond wall dressing or stucco.
2. When used in areas requiring wind-borne debris protection this product is required to be protected with an impact resistant covering that complies with Section R301.2.1.2 of the IRC and Section 1609.2 of the IBC.
3. Allowable design pressure requirements must be equal to or less than the design pressure rating shown in the design pressure chart, sheet 1 of this drawing.
4. Conditions not covered by this drawing are subject to further engineering analysis.

OVERALL FRAME DIMENSION	TOP SASH OVERALL D.L.O. DIMENSION	BOTTOM SASH OVERALL D.L.O. DIMENSION	GLASS TYPE	DESIGN PRESSURE (PSF)	
				POSITIVE	NEGATIVE
40.0" x 72.0"	34.375" x 32.875"	35.5" x 32.875"	G1	+45.0	-45.0
38.0" x 74.0"	32.375" x 33.875"	33.5" x 33.875"		+40.0	-40.0
32.0" x 60.0"	26.25" x 26.75"	27.5" x 26.75"		+50.0	-50.0
38.0" x 68.0"	32.125" x 31.75"	33.5" x 31.75"		+50.0	-50.0

TABLE OF CONTENTS

SHEET#	DESCRIPTION
1	Typical elevations, design pressures & general notes
2	Vertical & horizontal cross sections & frame anchoring
3	Bill of materials, glazing details and components

STATE OF TEXAS
LYNDON F. SCHMIDT
104123
LICENSED PROFESSIONAL ENGINEER
6-9-21

Documents Prepared By: Lyndon F. Schmidt, P.E.
TEXAS P.E. #104123
RW BUILDING CONSULTANTS, INC.
P.O. Box 230 Valrico FL. 33595
Phone No.: 813.659.9197
TEXAS BOARD OF PROFESSIONAL ENGINEERS
CERTIFICATE OF REGISTRATION # F-11852

PRODUCT: DOUBLE HUNG WINDOW

PART OR ASSEMBLY: TYPICAL ELEVATION, DESIGN PRESSURES & GENERAL NOTES

NO.	DATE	REVISIONS	BY

DATE: 6/08/21
SCALE: N.T.S.
DWG. BY: RW
CHK. BY: LFS
DRAWING NO.: TX-5099
SHEET 1 OF 3

© 2021 R.W. BUILDING CONSULTANTS INC.

Z:\Clients\Associated PERMANENT\B - Texas Dept of Ins\Double Hung\WIN-XXX Sereis 1900 DH\C - Drawings\TX-5099-5102.dwg

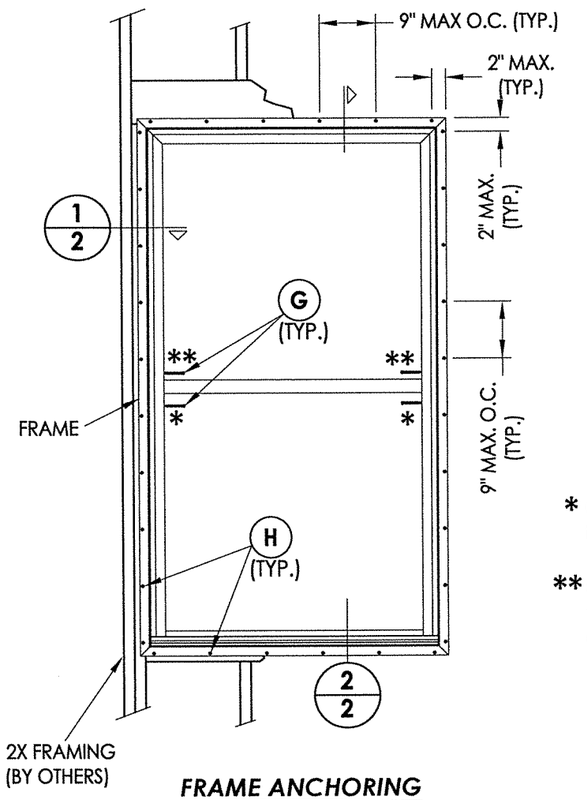

FRAME ANCHORING

NOTE:
1. SNAP-IN JAMB CLIP & SUBMARINE TILT LATCH REQUIRED FOR FRAME SIZES > 32" X 60".

* One anchor per jamb at the interior track near the interlock for all window frame sizes where the width > 32" or the height > 60".

** One anchor per jamb at the exterior track near the interlock for all window frame sizes where the width > 32" or the height > 60" and the design pressure > 45 psf.

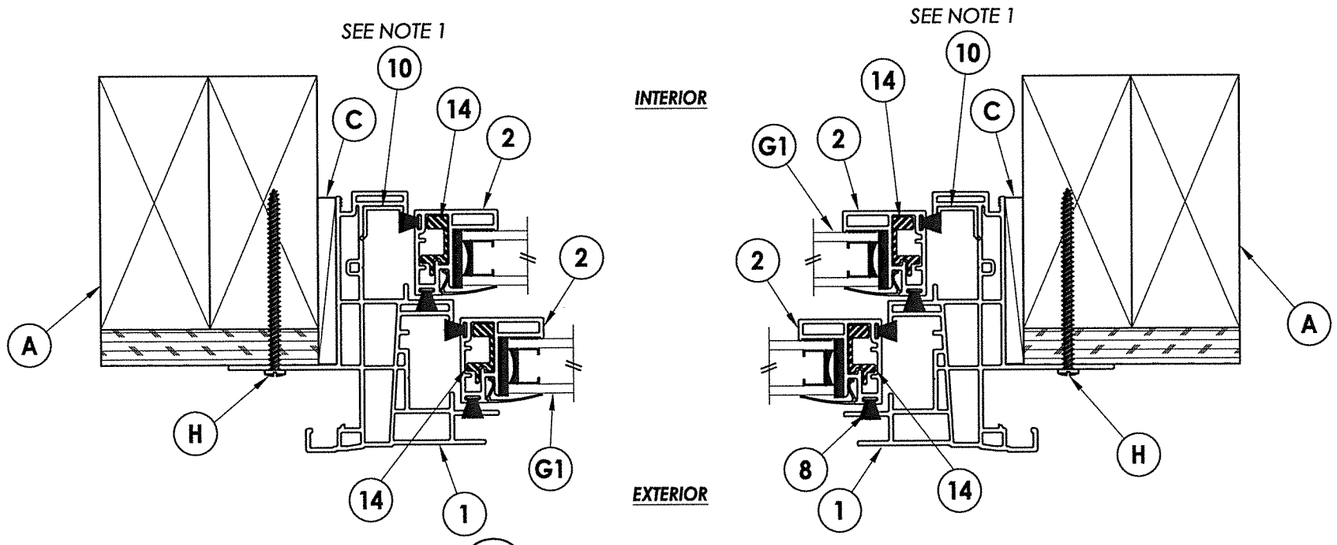

1/2 HORIZONTAL CROSS SECTION

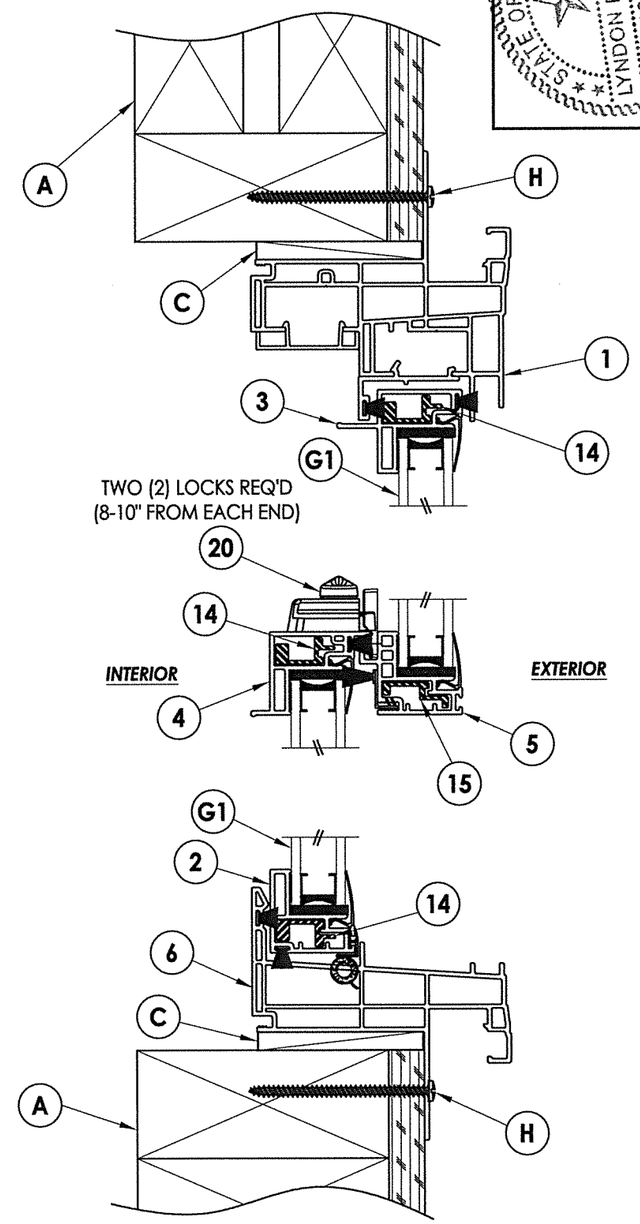

2/2 VERTICAL CROSS SECTION

STATE OF TEXAS
LYNDON F. SCHMIDT
104123
LICENSED PROFESSIONAL ENGINEER
6.9.21

Documents Prepared By: Lyndon F. Schmidt, P.E.
TEXAS P.E. #104123
RW BUILDING CONSULTANTS, INC.
P.O. Box 230 Valrico FL. 33595
Phone No.: 813.659.9197
TEXAS BOARD OF PROFESSIONAL ENGINEERS
CERTIFICATE OF REGISTRATION # F-11852

PRODUCT: DOUBLE HUNG WINDOW

PART OR ASSEMBLY: VERTICAL & HORIZONTAL CROSS SECTIONS & FRAME ANCHORING

NO.	DATE	REVISIONS	BY

DATE: 6/08/21
SCALE: N.T.S.
DWG. BY: RW
CHK. BY: LFS
DRAWING NO.: TX-5099
SHEET 2 OF 3

© 2021 R.W. BUILDING CONSULTANTS INC.

Z:\Clients\Associated PERMANENT\B - Texas Dept of Ins\Double Hung\WIN-XXX Sereis 1900 DH\C - Drawings\TX-5099-5102.dwg

BILL OF MATERIALS		
ITEM #	DESCRIPTION	MATERIAL
A	2X FRAMING (SG >= 0.42)	WOOD
C	1/4" MAX. SHIM SPACE	-
G	#8 X 2" PPH SMS (1-1/4" MIN. EMBEDMENT)	STEEL
H	#8 X 2-1/2" PPH SMS (1-3/4" MIN. EMBEDMENT)	STEEL
1	EXTRUDED VINYL FRAME HEAD & JAMB*	RIGID PVC
2	EXTRUDED VINYL SASH STILE/RAIL*	RIGID PVC
3	EXTRUDED VINYL TOP RAIL*	RIGID PVC
4	EXTRUDED VINYL LOCK RAIL*	RIGID PVC
5	EXTRUDED VINYL MEETING RAIL*	RIGID PVC
6	EXTRUDED VINYL SILL*	RIGID PVC
7	EXTRUDED VINYL GLAZING BEAD*	RIGID PVC
8	WEATHERSTRIP (FIN PILE)	-
10	JAMB CLIP (@ TILT LATCH)	ST. STEEL
14	SASH / STILE & RAIL REINFORCEMENT (S-047)(6063-T5)	ALUM
15	MEETING RAIL REINFORCEMENT (S-050)(6061-T6)	ALUM
20	CAM LOCK	-

*THE APPROVED WHITE RIGID PVC EXTERIOR EXTRUSIONS FOR WINDOWS ARE TO BE PRODUCED BY EXTRUDERS LICENSEES IN "AAMA CERTIFICATION PROGRAMS FOR RIGID PVC EXTRUSIONS."

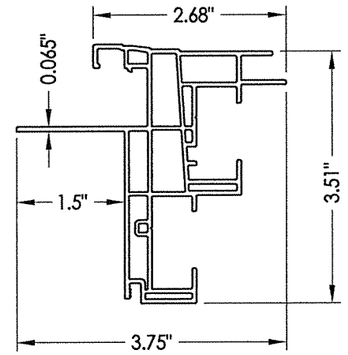

1 FRAME HEAD & JAMB

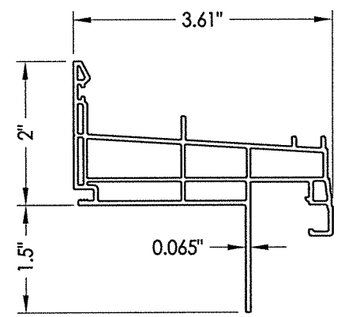

6 SILL

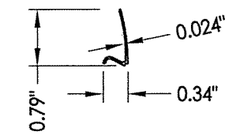

7 GLAZING BEAD

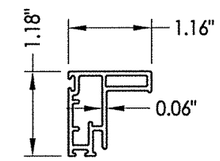

2 SASH STILE/RAIL

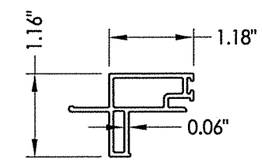

3 TOP RAIL

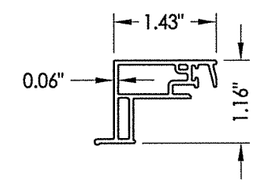

4 LOCK RAIL

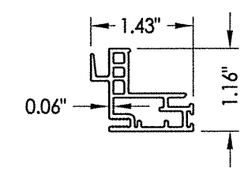

5 MEETING RAIL

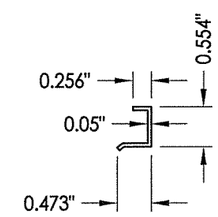

10 JAMB CLIP

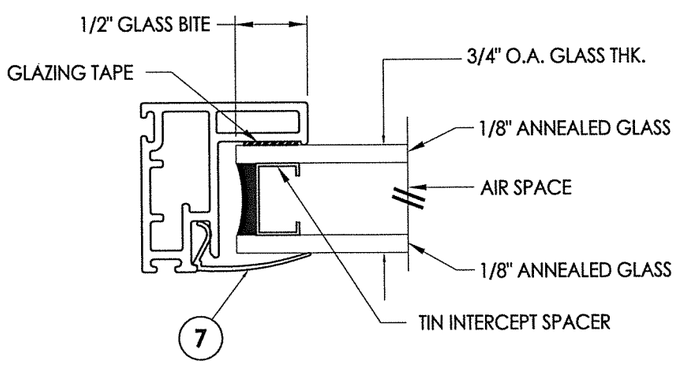

G1 GLAZING DETAIL

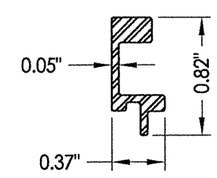

14 SASH/STILE & RAIL REINFORCEMENT

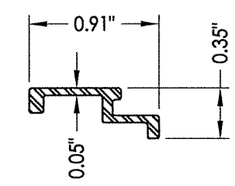

15 MEETING RAIL REINFORCEMENT

STATE OF TEXAS
LYNDON F. SCHMIDT
104123
LICENSED PROFESSIONAL ENGINEER
6.9.21

Documents Prepared By: Lyndon F. Schmidt, P.E.
TEXAS P.E. #104123

RW BUILDING CONSULTANTS, INC.
P.O. Box 230 Valrico FL. 33595
Phone No.: 813.659.9197

TEXAS BOARD OF PROFESSIONAL ENGINEERS
CERTIFICATE OF REGISTRATION # F-11852

PRODUCT: DOUBLE HUNG WINDOW

PART OR ASSEMBLY: BILL OF MATERIALS, GLAZING DETAILS & COMPONENTS

NO.	DATE	BY	REVISIONS

DATE: 6/08/21
SCALE: N.T.S.
DWG. BY: RW
CHK. BY: LFS
DRAWING NO.: TX-5099
SHEET 3 OF 3

© 2021 R.W. BUILDING CONSULTANTS INC.

Z:\Clients\Associated PERMANENT\B - Texas Dept of Ins\Double Hung\WIN-XXX Sereis 1900 DH\C - Drawings\TX-5099-5102.dwg