ASSOCIATED MATERIALS
INCORPORATED

3773 STATE ROAD
CUYAHOGA FALLS, OH 44223

MODEL 0104
PVC FIXED WINDOW
w/ NAILING FIN

"NON-IMPACT"

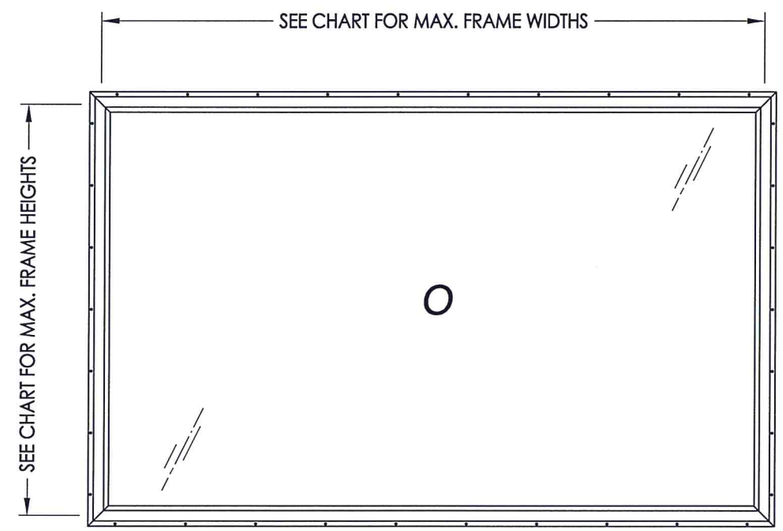

EVALUATED FOR USE IN THE STATE OF TEXAS

The Fixed Window described herein complies with the 2018 International Residential Code (IRC), Sections R301 & R609 and the 2018 International Building Code (IBC), Sections 1404.13, 1609, 1709.5, 2403 and 2404 subject to the following conditions:

1. Anchors shall be as listed and spaced as shown in the details. Anchor embedment to base material shall be beyond wall dressing or stucco.
2. When used in areas requiring wind-borne debris protection this product is required to be protected with an impact resistant covering that complies with Section R301.2.1.2 of the IRC and Section 1609.2 of the IBC.
3. Allowable design pressure requirements must be equal to or less than the design pressure rating shown in the design pressure chart, sheet 1 of this drawing.
4. Conditions not covered by this drawing are subject to further engineering analysis.

NOTE: Orientation Horizontal or Vertical

MAX. FRAME DIMENSION	MAX. D.L.O. DIMENSION	GLASS TYPE	DESIGN PRESSURE (PSF)	
			POS.	NEG.
95.0" X 59.0"	91.88" X 55.88"	G1	+35.0	-35.0
60.0" X 60.0"	56.88" X 56.88"	G2	+50.0	-50.0
72.0" X 48.0"	68.88" X 44.88"		+45.0	-45.0
72.0" X 36.0"	68.88" X 32.88"	G3	+65.0	-65.0

TABLE OF CONTENTS

SHEET#	DESCRIPTION
1	Typical Elevations, Design Pressures & General Notes
2	Cross Sections & Frame Anchoring
3	Bill of Materials, Glazing Details & Components

STATE OF TEXAS
LYNDON F. SCHMIDT
104123
LICENSED PROFESSIONAL ENGINEER
7/13/20

Documents Prepared By: Lyndon F. Schmidt, P.E.
TEXAS P.E. #104123
RW BUILDING CONSULTANTS, INC.
P.O. Box 230 Valrico FL. 33595
Phone No.: 813.659.9197
TEXAS BOARD OF PROFESSIONAL ENGINEERS
CERTIFICATE OF REGISTRATION # F-11852

PRODUCT: FIXED WINDOW

PART OR ASSEMBLY: TYPICAL ELEVATION, DESIGN PRESSURES & GENERAL NOTES

REVISIONS

NO.	DATE	BY

DATE: 6/30/20
SCALE: N.T.S.
DWG. BY: RW
CHK. BY: LFS
DRAWING NO.: TX-5080
SHEET 1 OF 3

© 2020 R.W. BUILDING CONSULTANTS INC.

R:\Clients\Associated PERMANENT\B - Texas Dept of Ins\Fixed\TDI XXX 0104 Fixed Windows\C - Drawings\TX-5080.dwg, TX-5080

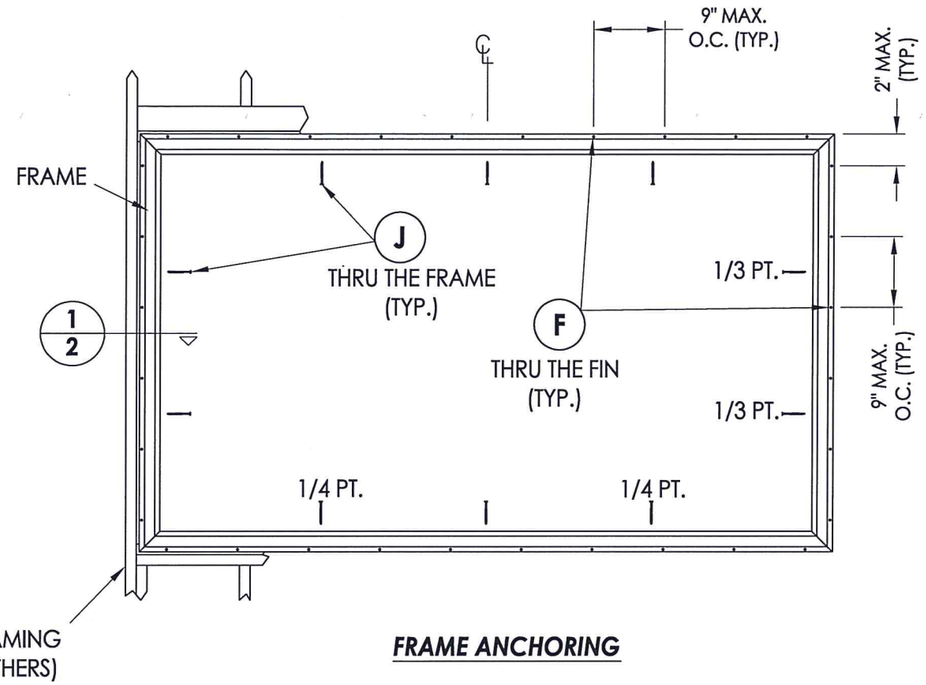

FRAME ANCHORING

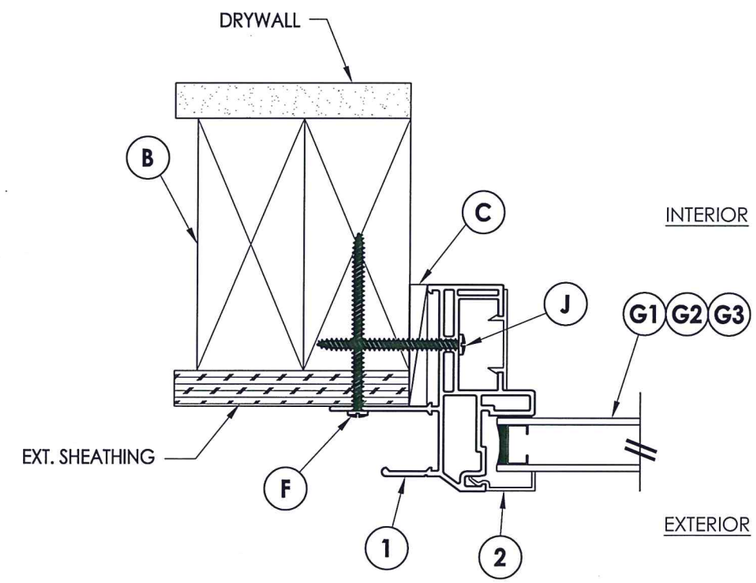

1/2 ***HORIZONTAL CROSS SECTION***

STATE OF TEXAS
LYNDON F. SCHMIDT
104123
LICENSED
PROFESSIONAL ENGINEER
7.13.20

Documents Prepared By: Lyndon F. Schmidt, P.E.
TEXAS P.E. #104123

RW BUILDING CONSULTANTS, INC.
P.O. Box 230 Valrico FL. 33595
Phone No.: 813.659.9197

TEXAS BOARD OF PROFESSIONAL ENGINEERS
CERTIFICATE OF REGISTRATION # F-11852

PRODUCT: FIXED WINDOW

PART OR ASSEMBLY: CROSS SECTIONS

NO.	DATE	REVISIONS	BY

DATE: 6/30/20
SCALE: N.T.S.
DWG. BY: RW
CHK. BY: LFS
DRAWING NO.: TX-5080
SHEET 2 OF 3

© 2020 R.W. BUILDING CONSULTANTS INC.

R:\Clients\Associated PERMANENT\B - Texas Dept of Ins\Fixed\TDI XXX 0104 Fixed Windows\C - Drawings\TX-5080.dwg, 1-2

BILL OF MATERIALS		
ITEM #	DESCRIPTION	MATERIAL
B	2X FRAMING (SG >= 0.42)	WOOD
C	1/4" MAX. SHIM SPACE	-
F	#8 X 2-1/2" PPH SMS (1-3/4" MIN. EMBEDMENT)	STEEL
J	#8 X 2" PPH SMS (1-1/4" MIN. EMBEDMENT)	STEEL
1	EXTRUDED VINYL FRAME *	RIGID PVC
2	EXTRUDED VINYL GLAZING BEAD *	RIGID PVC

* THE APPROVED WHITE RIGID PVC EXTERIOR EXTRUSIONS FOR WINDOWS ARE TO BE PRODUCED BY EXTRUDERS LICENSEES IN "CERTIFICATION PROGRAMS FOR RIGID PVC EXTRUSIONS".

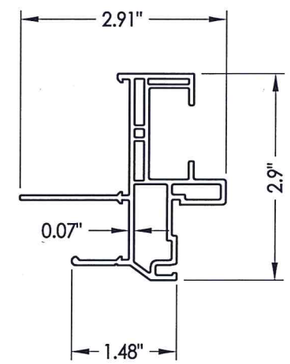

1 FRAME

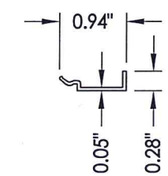

2 GLAZING BEAD

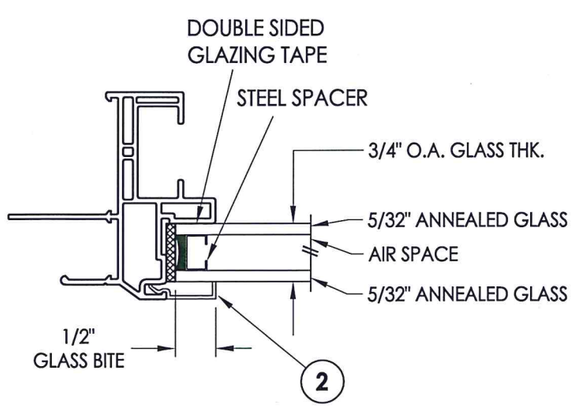

G1 GLAZING DETAIL

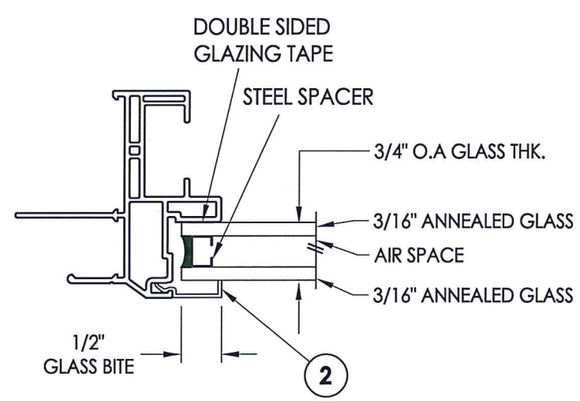

G2 GLAZING DETAIL

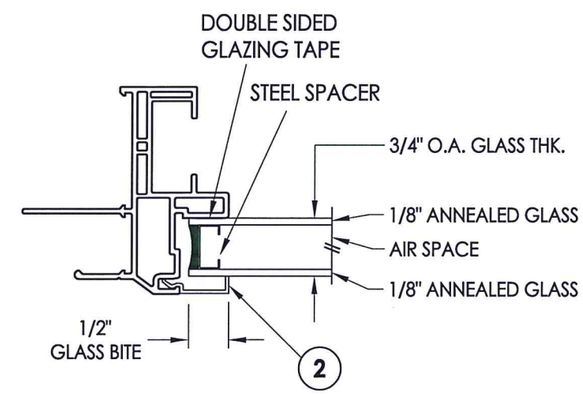

G3 GLAZING DETAIL

STATE OF TEXAS
LYNDON F. SCHMIDT
104123
LICENSED PROFESSIONAL ENGINEER
7-13-20

Documents Prepared By: Lyndon F. Schmidt, P.E.
TEXAS P.E. #104123

RW BUILDING CONSULTANTS, INC.
P.O. Box 230 Valrico FL 33595
Phone No.: 813.659.9197

TEXAS BOARD OF PROFESSIONAL ENGINEERS
CERTIFICATE OF REGISTRATION # F-11852

PRODUCT: FIXED WINDOW

PART OR ASSEMBLY: BILL OF MATERIALS, GLAZING DETAILS & COMPONENTS

NO.	DATE	BY

REVISIONS

DATE: 6/30/20
SCALE: N.T.S.
DWG. BY: RW
CHK. BY: LFS
DRAWING NO.: TX-5080
SHEET 3 OF 3

© 2020 R.W. BUILDING CONSULTANTS INC.

R:\Clients\Associated PERMANENT\B - Texas Dept of Ins\Fixed\TDI XXX 0104 Fixed Windows\C - Drawings\TX-5080.dwg, 1-3