THERMA-TRU® DOORS

Fiber-Classic® & Smooth-Star®

COMPOSITE EDGE GLAZED FIBERGLASS SINGLE DOOR w/ SIDELITE(S)

INSWING/OUTSWING "IMPACT"

EVALUATED FOR USE IN THE STATE OF TEXAS

The Fiberglass Door described herein complies with the 2006 International Residential Code (IRC), Sections R301 & R613 and the 2006 International Building Code (IBC), Sections 1405.12, 1609, 1714.5, 2403 and 2404 (including Texas revisions) subject to the following conditions:

1. Anchors shall be as listed and spaced as shown in the details. Anchor embedment to base material shall be beyond wall dressing or stucco.
2. This product has been tested and evaluated as a large missile impact protective system for installation in the Seaward, Inland I and Inland II areas. The glazed door & sidelites meet missile level "D" as defined in ASTM E 1996.
3. Allowable design pressure requirements must be equal to or less than the design pressure rating shown in the design pressure chart, sheet 1 of this drawing.
4. Conditions not covered by this drawing are subject to further engineering analysis.
5. Fiber-Classic and Smooth-Star Door and Sidelite panels require the use of "J" part numbers. These door and sidelite panels must be stained or painted within six months of installation.

TABLE OF CONTENTS

SHEET #	DESCRIPTION
1	Typical Elevations, Design Pressures & General Notes
2	Door Panel Details
3	Sidelite Panel Details
4	Elevations
5	Horizontal & Vertical Cross Sections
6	Vertical Cross Sections (Thresholds)
7	Frame Anchoring
8	Hardware Details
9	Glazing Details
10	Components
11	Bill of Materials

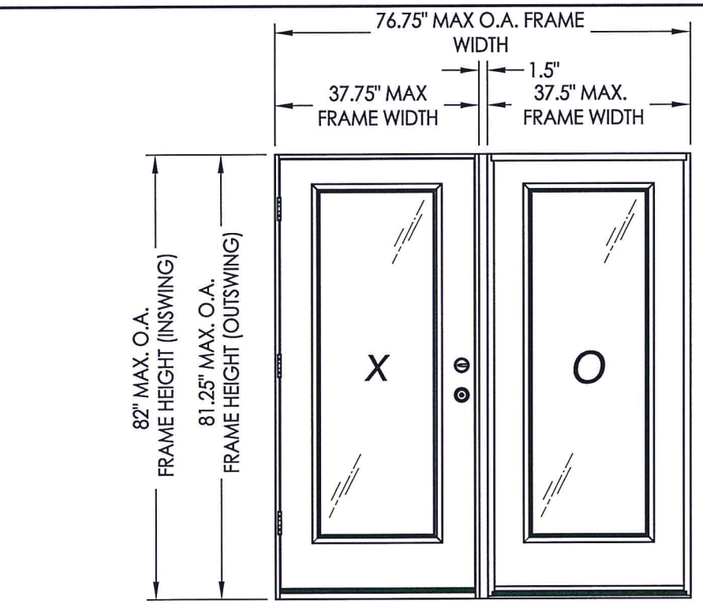

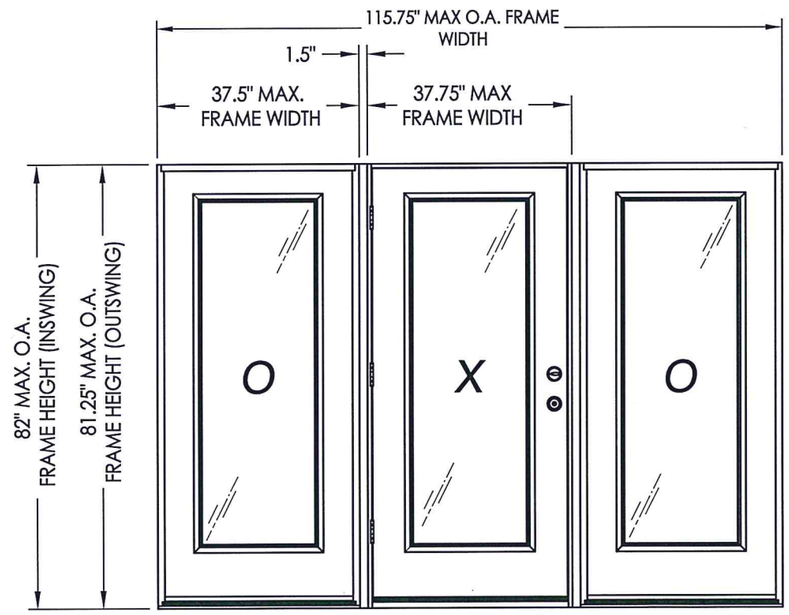

CONFIGURATION	DESIGN PRESSURE (PSF) INSWING		DESIGN PRESSURE (PSF) OUTSWING	
	POSITIVE	NEGATIVE	POSITIVE	NEGATIVE
XO/OX, OXO	+47.0	-50.0	+50.0	-50.0

See Sheet 4 for Hardware Specifications

STATE OF TEXAS · LYNDON F. SCHMIDT · 104123 · LICENSED PROFESSIONAL ENGINEER

Documents Prepared By: Lyndon F. Schmidt, P.E. TEXAS P.E. #104123

RW BUILDING CONSULTANTS, INC.
P.O. Box 230 Valrico FL. 33595
Phone No.: 813.659.9197

CERTIFICATE OF REGISTRATION # F-11852

PRODUCT: THERMA-TRU FIBERGLASS DOOR

PART OR ASSEMBLY: TYPICAL ELEVATION, DESIGN PRESSURES & GENERAL NOTES

REVISIONS

NO.	DATE	BY

DATE: 10/24/17
SCALE: N.T.S.
DWG. BY: JK
CHK. BY: LFS
DRAWING NO.: TX-4730
SHEET 1 OF 11

© 2017 R.W. BUILDING CONSULTANTS INC.

R:\Clients\Therma Tru PERMANENT\B - Texas Dept of Ins\TDI - DR-XXX - 6'8 & 8'0 Glazed Comp Edge Impact\C - Drawings\TX-4729-31.dwg, TX-4730

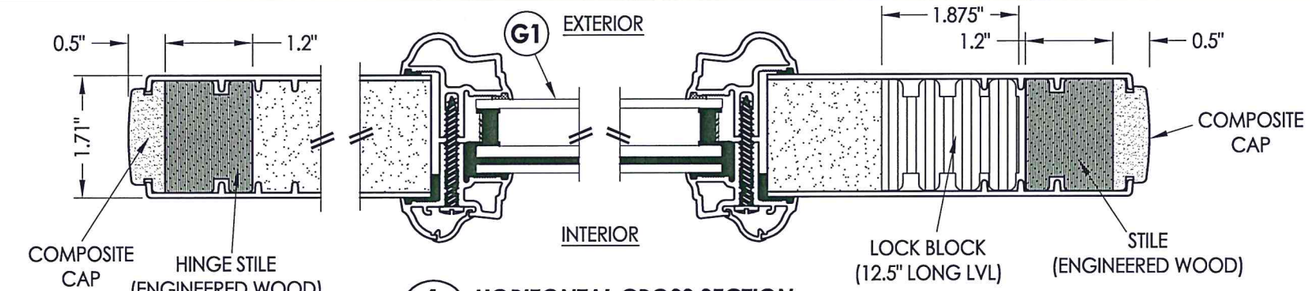

1/2 **HORIZONTAL CROSS SECTION**

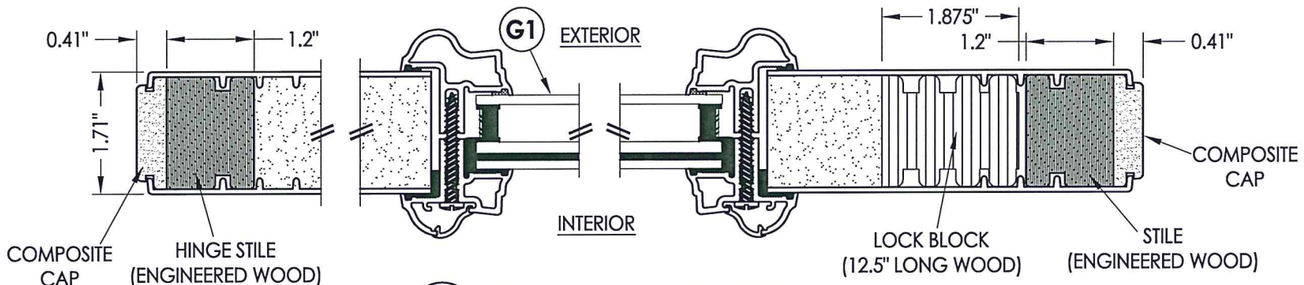

2/2 **HORIZONTAL CROSS SECTION**

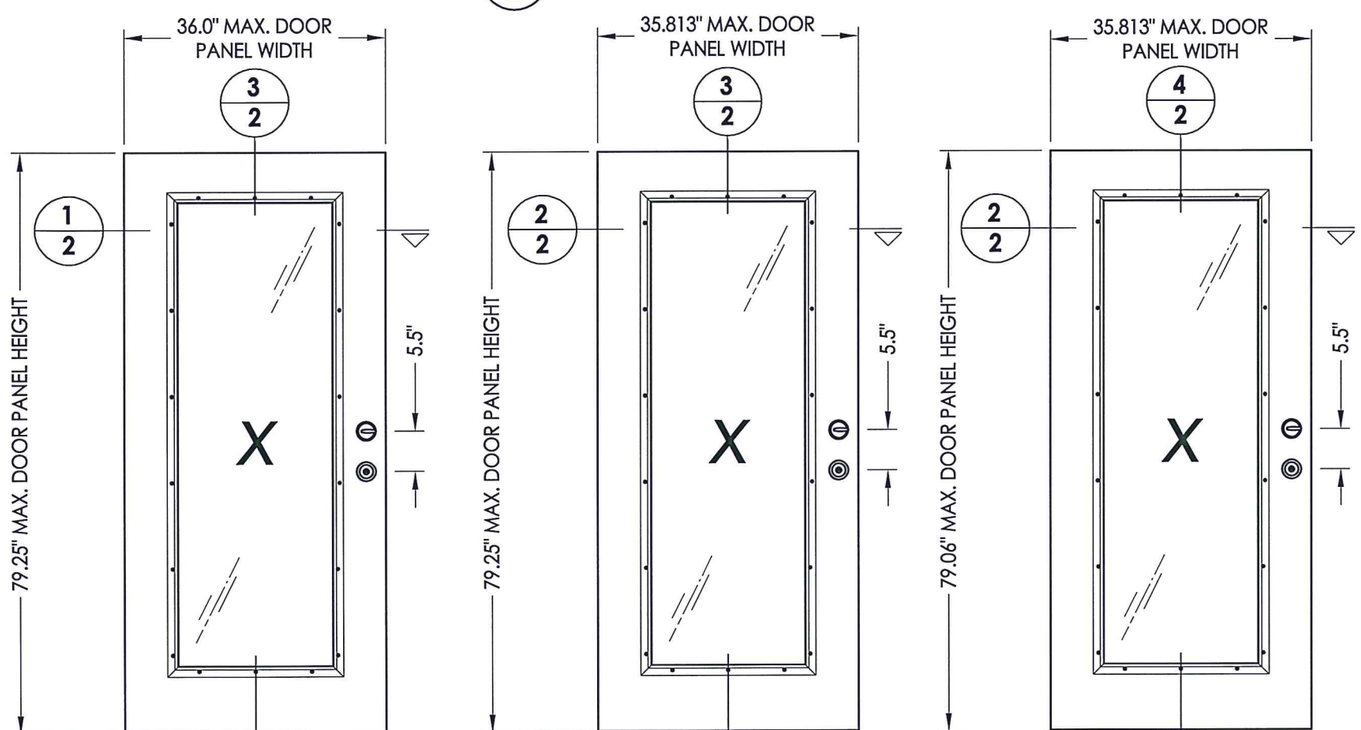

40 **DOOR PANEL** BOOK

41 **DOOR PANEL** Hybrid Door

42 **DOOR PANEL** U1 Door

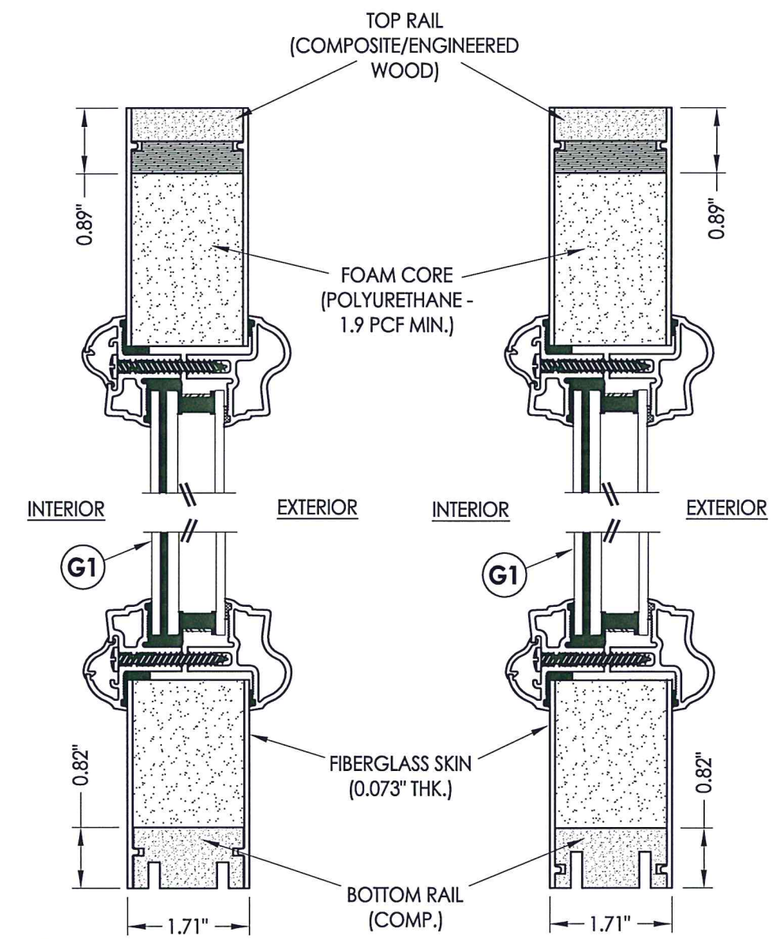

3/2 **VERTICAL CROSS SECTION**

4/2 **VERTICAL CROSS SECTION**

STATE OF TEXAS
LYNDON F. SCHMIDT
104123
LICENSED PROFESSIONAL ENGINEER

Documents Prepared By: Lyndon F. Schmidt, P.E. TEXAS P.E. #104123
RW BUILDING CONSULTANTS, INC.
P.O. Box 230 Valrico FL. 33595
Phone No.: 813.659.9197

CERTIFICATE OF REGISTRATION # F-11852

PRODUCT: THERMA-TRU FIBERGLASS DOOR

PART OR ASSEMBLY: DOOR PANEL DETAILS

NO.	DATE	BY

REVISIONS

DATE: 10/24/17
SCALE: N.T.S.
DWG. BY: JK
CHK. BY: LFS
DRAWING NO.: TX-4730
SHEET 2 OF 11

© 2017 R.W. Building Consultants Inc.

R:\Clients\Therma Tru PERMANENT\B - Texas Dept of Ins\TDI - DR-XXX - 6'8 & 8'0 Glazed Comp Edge Impact\C - Drawings\TX-4729-31.dwg, 2.2

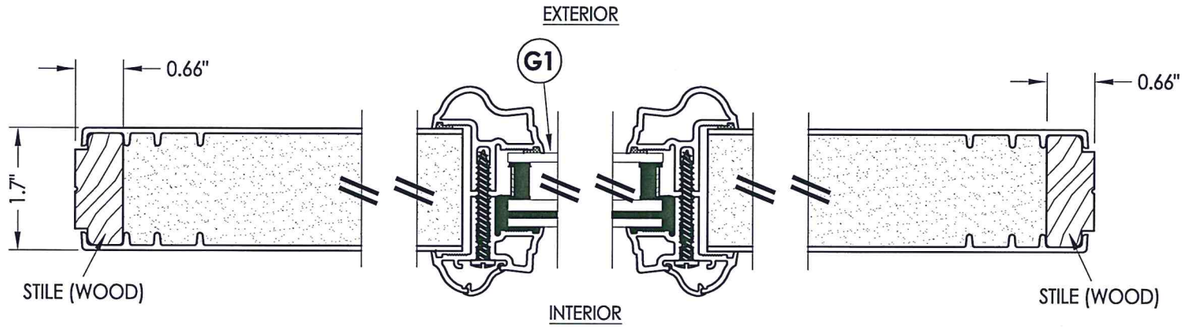

1/3 **HORIZONTAL CROSS SECTION**

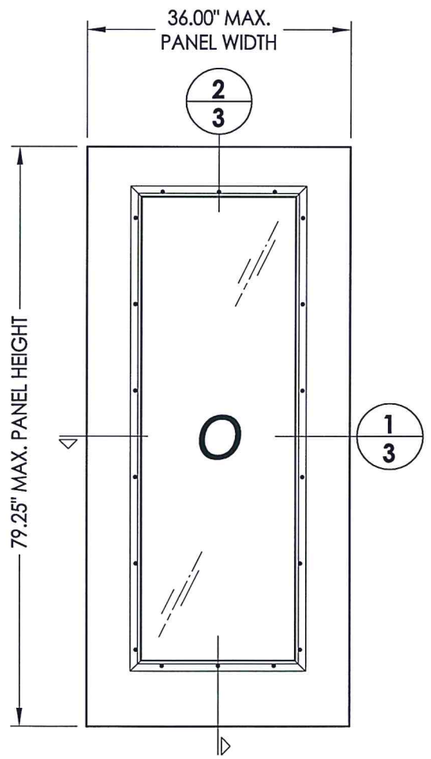

50 **SIDELITE PANEL**

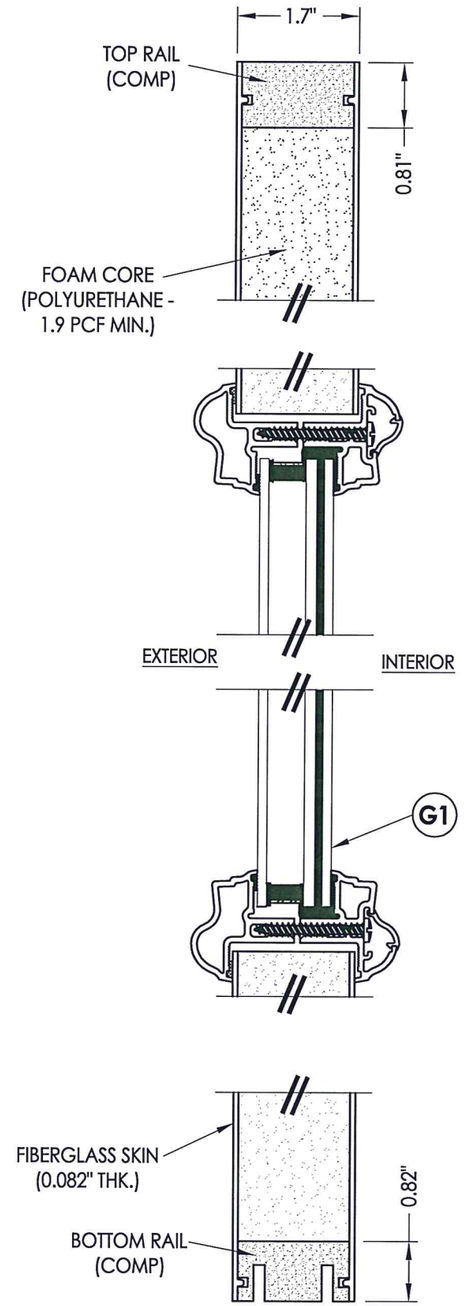

2/3 **VERTICAL CROSS SECTION**

STATE OF TEXAS
LYNDON F. SCHMIDT
104123
LICENSED
PROFESSIONAL ENGINEER

10-18-17

Documents Prepared By: Lyndon F. Schmidt, P.E.
TEXAS P.E. #104123

RW BUILDING CONSULTANTS, INC.
P.O. Box 230 Valrico FL. 33595
Phone No.: 813.659.9197

CERTIFICATE OF REGISTRATION # F-11852

PRODUCT: THERMA-TRU FIBERGLASS DOOR

PART OR ASSEMBLY: SIDELITE PANEL DETAILS

NO.	DATE	REVISIONS	BY

DATE: 10/24/17
SCALE: N.T.S.
DWG. BY: JK
CHK. BY: LFS
DRAWING NO.: TX-4730
SHEET 3 OF 11

© 2017 R.W. Building Consultants Inc.

R:\Clients\Therma Tru PERMANENT\B - Texas Dept of Ins\TDI - DR-XXX - 6'8 & 8'0 Glazed Comp Edge Impact\C - Drawings\TX-4729-31.dwg, 3.2

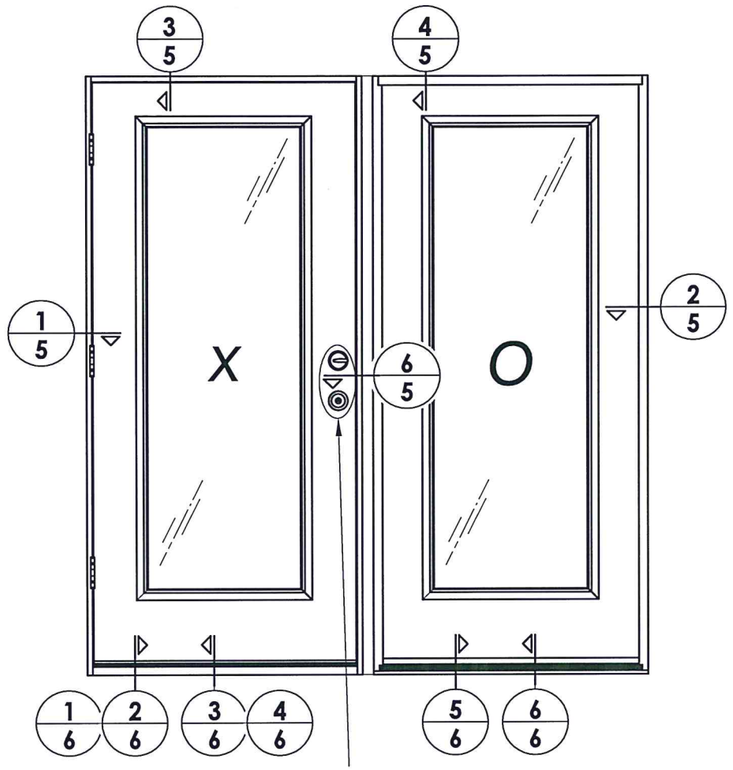

ELEVATION
XO

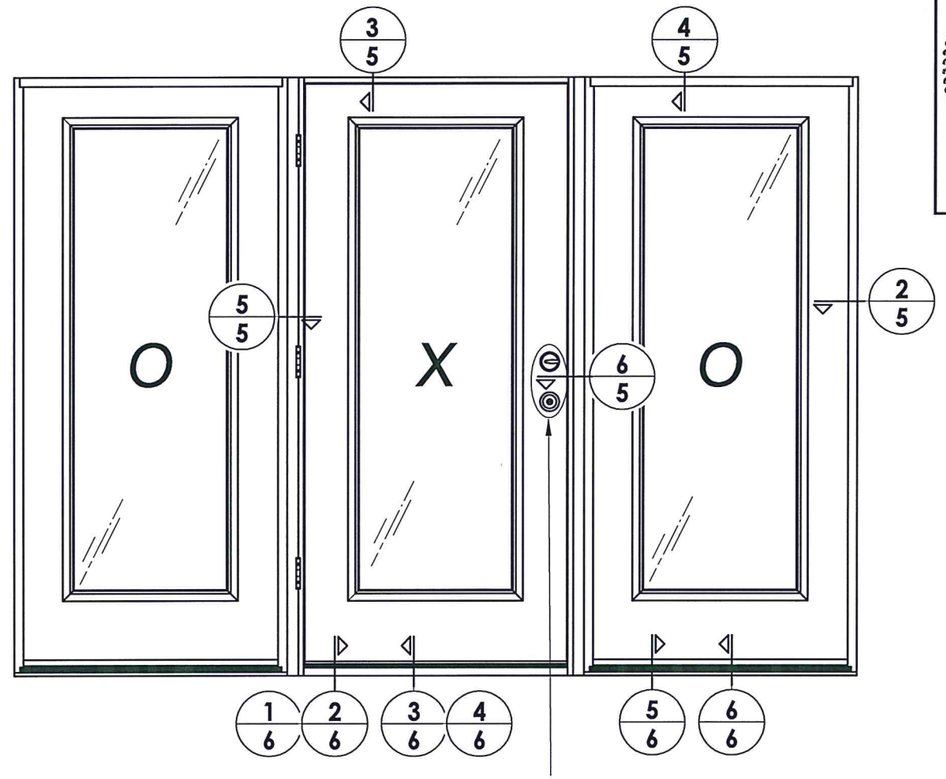

ELEVATION
OXO

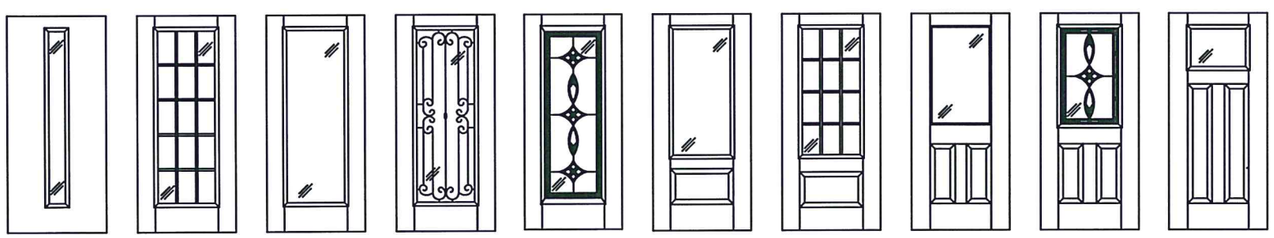

Fiber-Classic/Smooth-Star Door Panel Options

Panel options shown are for illustration and are representative only
(similar glazed panel configurations are allowed)

HARDWARE TABLE	
MANUFACTURER	**MODEL**
SCHLAGE	**KNOB:** F51 **DEADBOLT:** B60
KWIKSET	**KNOB:** SIGNATURE SERIES **DEADBOLT:** SIGNATURE SERIES (980)
HOPPE (THERMA-TRU)	**MULTIPOINT :** MPDGART (3 pt. Manual Tongue)

STATE OF TEXAS
LYNDON F. SCHMIDT
104123
LICENSED PROFESSIONAL ENGINEER

Documents Prepared By: Lyndon F. Schmidt, P.E.
TEXAS P.E. #104123

R.W. BUILDING CONSULTANTS, INC.
P.O. Box 230 Valrico FL. 33595
Phone No.: 813.659.9197

CERTIFICATE OF REGISTRATION # F-11852

PRODUCT: THERMA-TRU FIBERGLASS DOOR

PART OR ASSEMBLY: ELEVATIONS

NO.	DATE	REVISIONS	BY

DATE: 10/24/17
SCALE: N.T.S.
DWG. BY: JK
CHK. BY: LFS
DRAWING NO.: TX-4730
SHEET 4 OF 11

© 2017 R.W. BUILDING CONSULTANTS INC.

R:\Clients\Therma Tru PERMANENT\B - Texas Dept of Ins\TDI - DR-XXX - 6'8 & 8'0 Glazed Comp Edge Impact\C - Drawings\TX-4729-31.dwg, 4.2

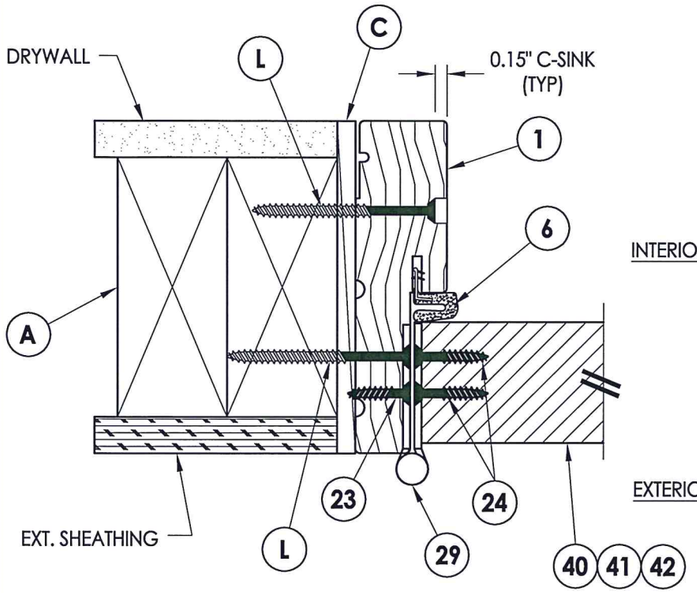

1/5 **HORIZONTAL CROSS SECTION**
Shown w/ 2X Buck
Outswing shown (Inswing similar)

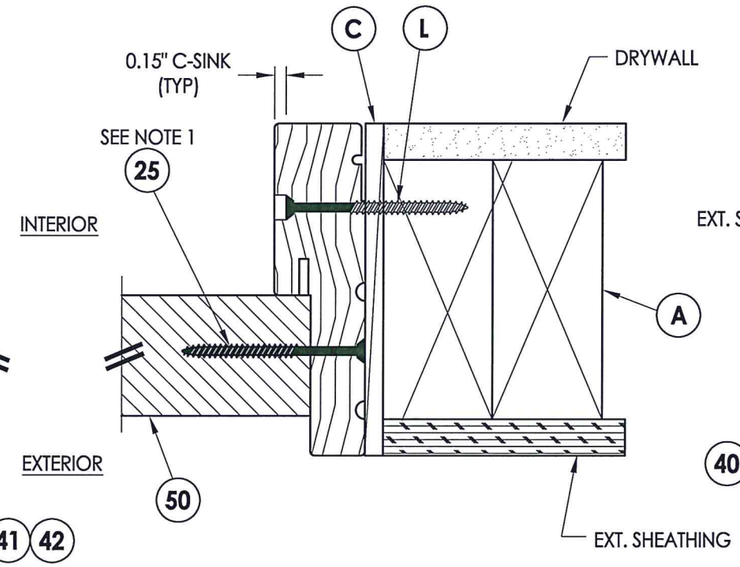

2/5 **HORIZONTAL CROSS SECTION**
Shown w/ 2X Buck
Outswing shown (Inswing similar)

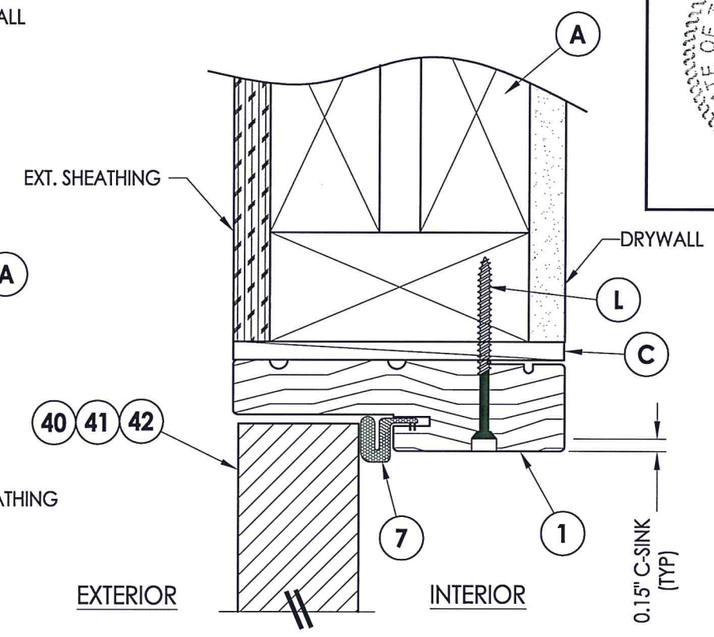

3/5 **VERTICAL CROSS SECTION**
Shown w/ 2X Buck
Outswing shown (Inswing similar)

Notes:
1. Sidelite assembly screws located 6" from each end and 5 more screws equally spaced between (7 screws total per side jamb).
2. Sidelite assembly screws located 3" from each end & at centerline (3 screws along head jamb).

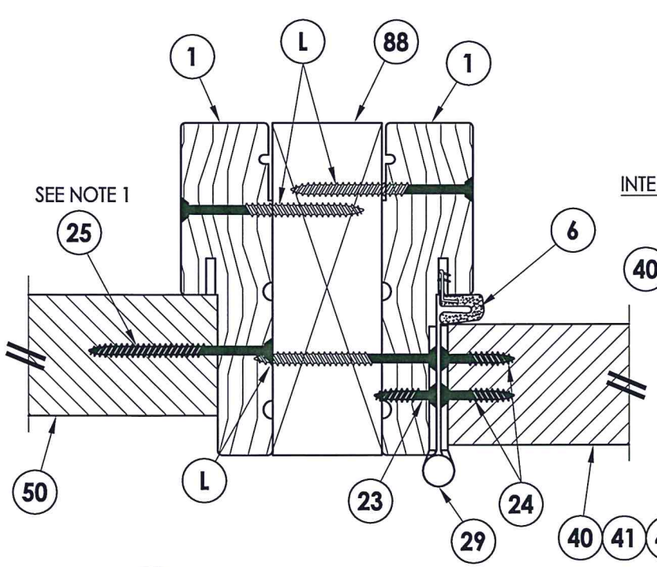

5/5 **HORIZONTAL CROSS SECTION**
Outswing shown (Inswing similar)

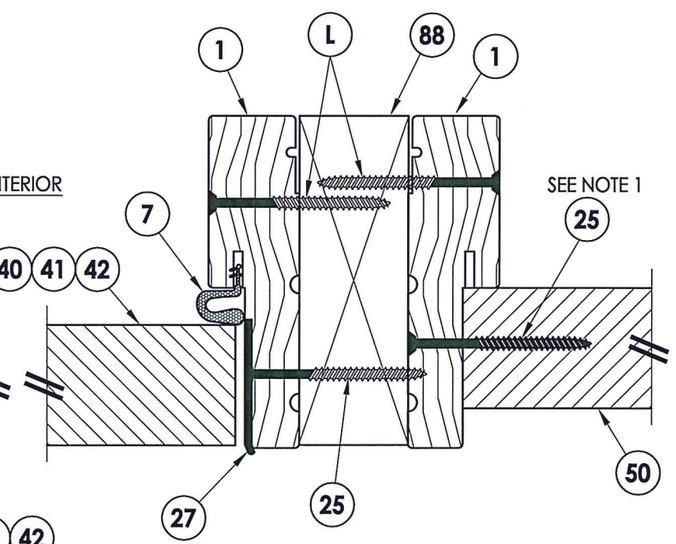

6/5 **HORIZONTAL CROSS SECTION**
Outswing shown (Inswing similar)

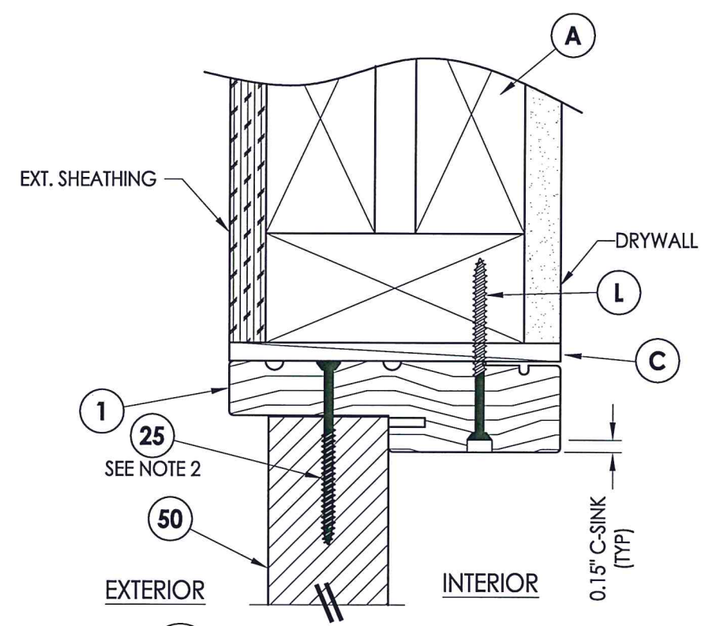

4/5 **VERTICAL CROSS SECTION**
Shown w/ 2X Buck
Outswing shown (Inswing similar)

STATE OF TEXAS
LYNDON F. SCHMIDT
104123
LICENSED PROFESSIONAL ENGINEER

Documents Prepared By: Lyndon F. Schmidt, P.E.
TEXAS P.E. #104123
RW BUILDING CONSULTANTS, INC.
P.O. Box 230 Valrico FL. 33595
Phone No.: 813.659.9197
CERTIFICATE OF REGISTRATION # F-11852

PRODUCT: THERMA-TRU FIBERGLASS DOOR
PART OR ASSEMBLY: HORIZONTAL & VERTICAL CROSS SECTIONS

NO.	DATE	REVISIONS	BY

DATE: 10/24/17
SCALE: N.T.S.
DWG. BY: JK
CHK. BY: LFS
DRAWING NO.: TX-4730
SHEET 5 OF 11

© 2017 R.W. Building Consultants Inc.

R:\Clients\Therma Tru PERMANENT\B - Texas Dept of Ins\TDI - DR-XXX - 68 & 80 Glazed Comp Edge Impact\C - Drawings\TX-4729-31.dwg, 5.2

Notes:
1. Sill Item #'s 16, 32, 33, 34, 35, 36, 37, 38 & 39 are attached to jambs w/ (3) #8 X 2-1/2" pfh screws at each end.
   Sill Item #'s 17 & 18 are attached to jambs w/ (2) #8 X 2-1/2" pfh screws at each end.
   Sill Item #15 is attached to jambs utilizing (2) #10 X 1-1/2" pph screws at each end.
2. Sidelite assembly screws located 3" from each end & at centerline (3 screws along sill).

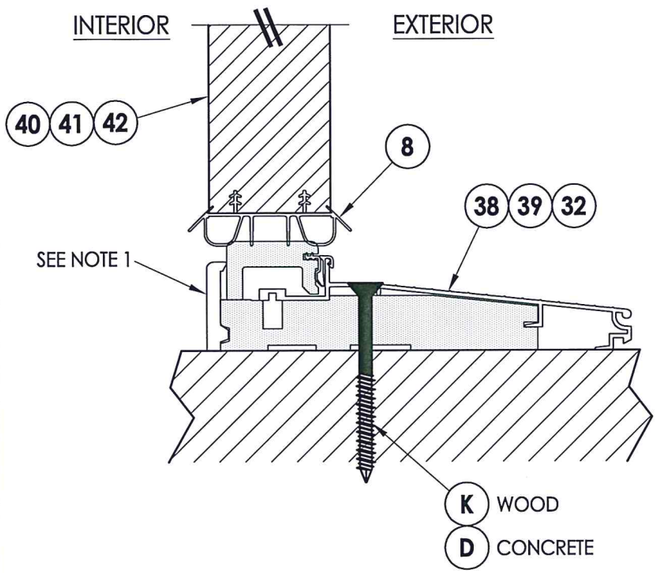

1/6 **VERTICAL CROSS SECTION**
Inswing Sill

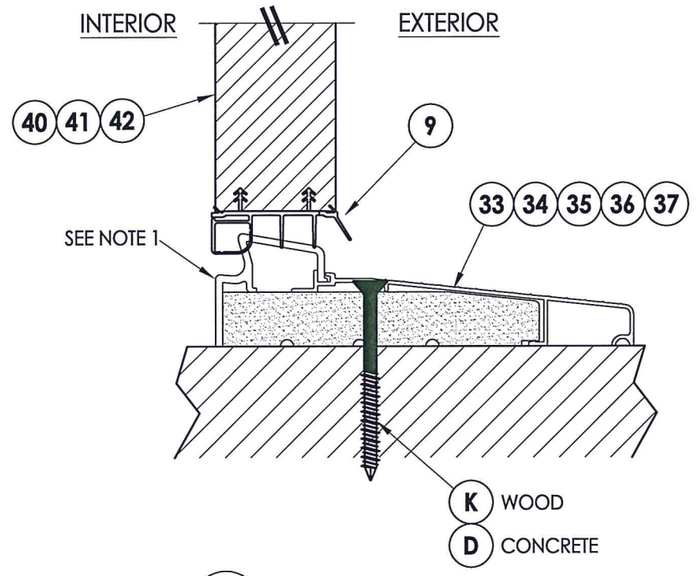

2/6 **VERTICAL CROSS SECTION**
Inswing Sill

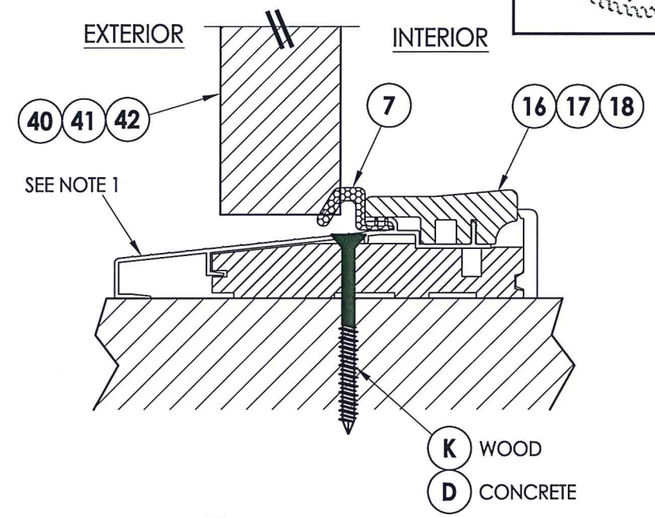

3/6 **VERTICAL CROSS SECTION**
Outswing Sill

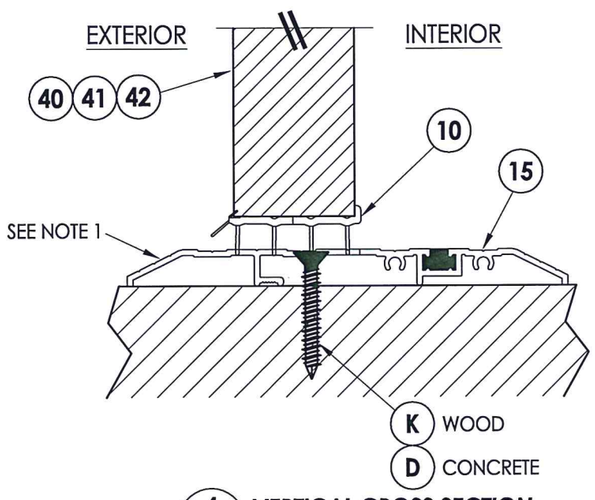

4/6 **VERTICAL CROSS SECTION**
Public Access Sill

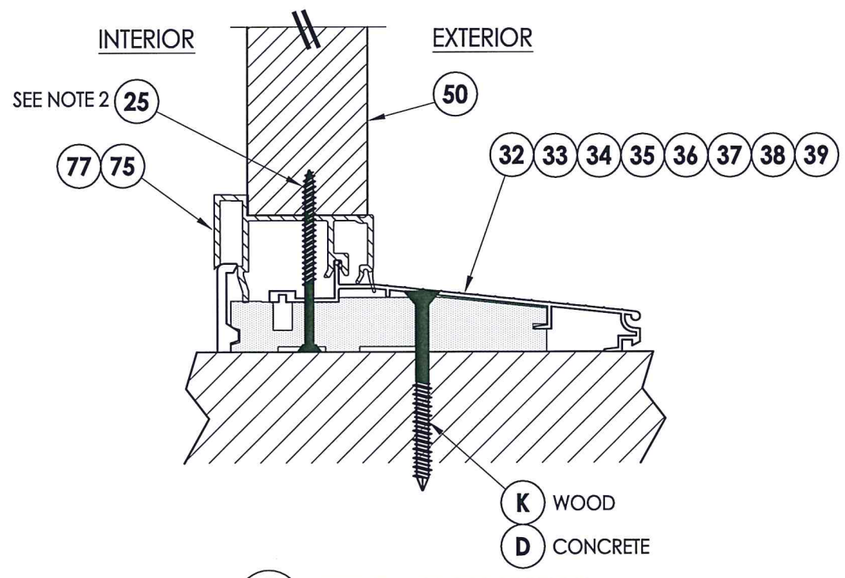

5/6 **VERTICAL CROSS SECTION**
Inswing Sill

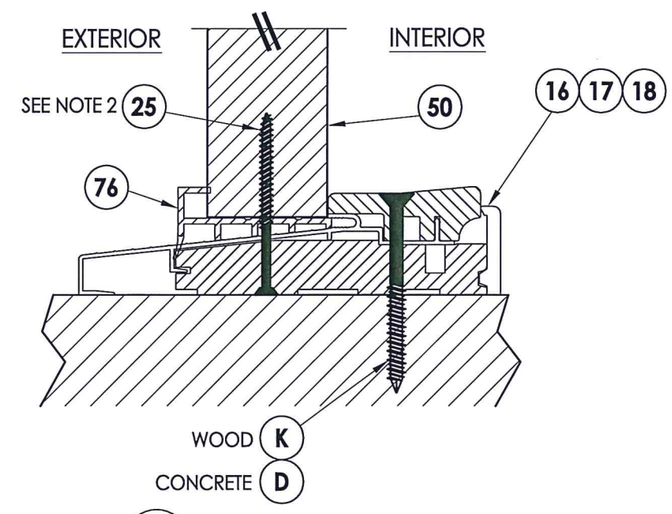

6/6 **VERTICAL CROSS SECTION**
Outswing Sill

STATE OF TEXAS
LYNDON F. SCHMIDT
104123
LICENSED PROFESSIONAL ENGINEER
11-15-17

Documents Prepared By: Lyndon F. Schmidt, P.E.
TEXAS P.E. #104123
RW BUILDING CONSULTANTS, INC.
P.O. Box 230 Valrico FL. 33595
Phone No.: 813.659.9197
CERTIFICATE OF REGISTRATION # F-11852

PRODUCT: THERMA-TRU FIBERGLASS DOOR
PART OR ASSEMBLY: VERTICAL CROSS SECTIONS (THRESHOLDS)

NO.	DATE	REVISIONS	BY

DATE: 10/24/17
SCALE: N.T.S.
DWG. BY: JK
CHK. BY: LFS
DRAWING NO.: TX-4730
SHEET 6 OF 11

© 2017 R.W. BUILDING CONSULTANTS INC.

R:\Clients\Therma Tru PERMANENT\B - Texas Dept of Ins\TDI - DR-XXX - 6'8 & 8'0 Glazed Comp Edge Impact\C - Drawings\TX-4729-31.dwg, 6.2

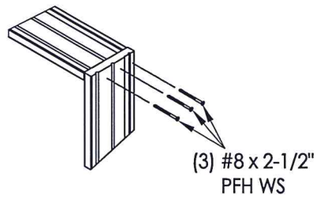

JAMB TO HEAD DETAIL
(TYP.)

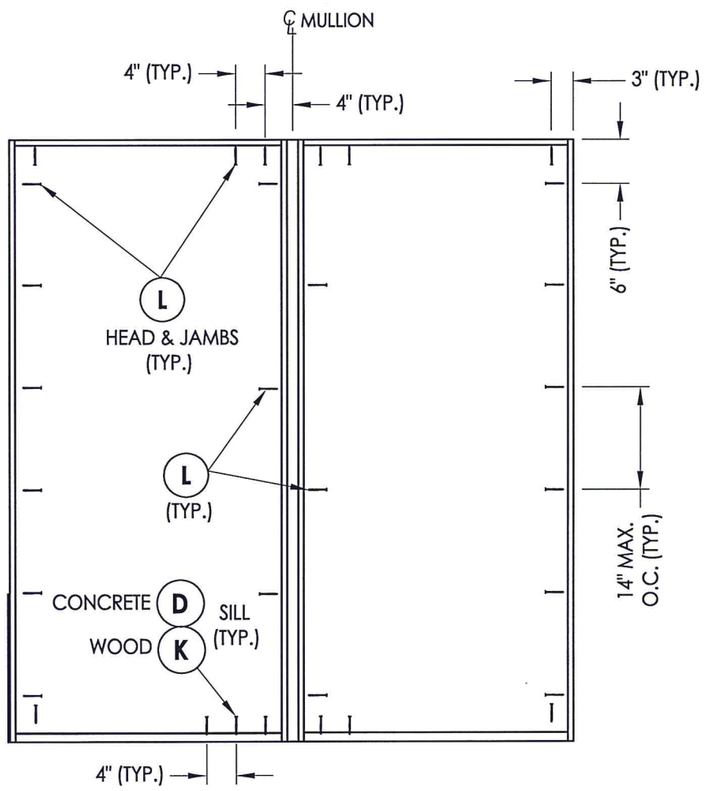

XO/OX

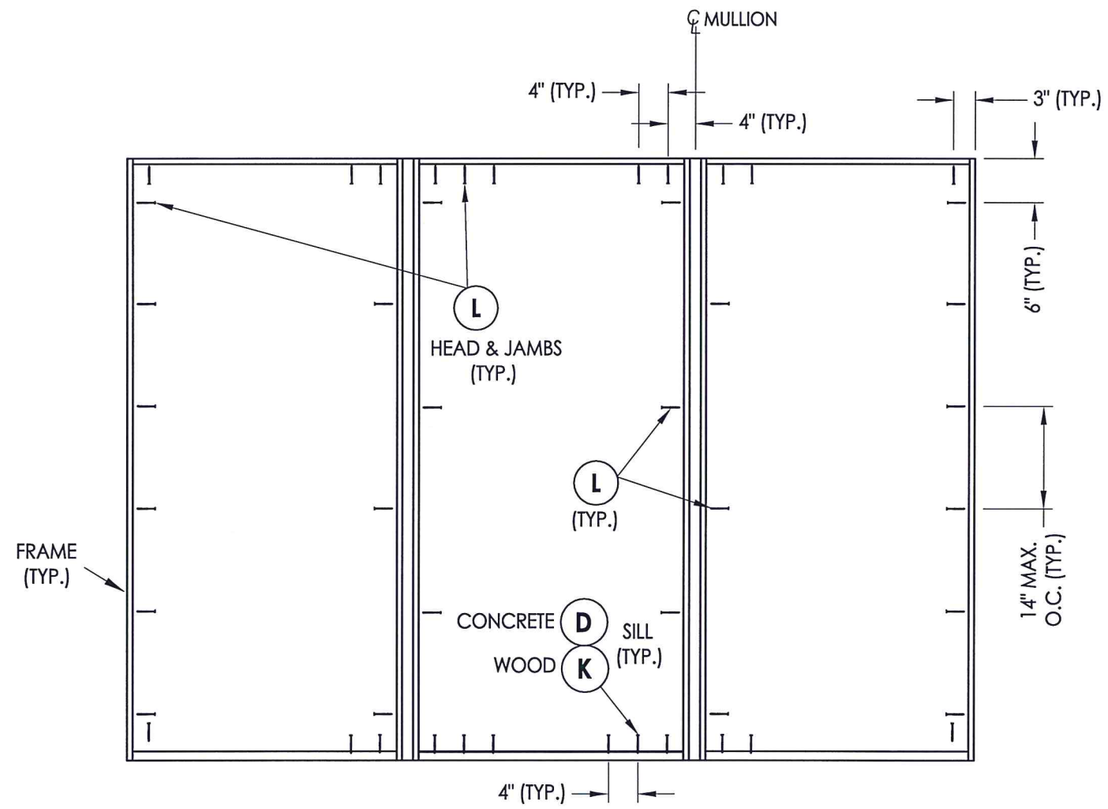

OXO

FRAME ANCHORING

STATE OF TEXAS
LYNDON F. SCHMIDT
104123
LICENSED
PROFESSIONAL ENGINEER

Documents Prepared By: Lyndon F. Schmidt, P.E.
TEXAS P.E. #104123

RW BUILDING CONSULTANTS, INC.
P.O. Box 230 Valrico FL. 33595
Phone No.: 813.659.9197

CERTIFICATE OF REGISTRATION # F-11852

PRODUCT: THERMA-TRU FIBERGLASS DOOR

PART OR ASSEMBLY: FRAME ANCHORING

NO.	DATE	REVISIONS	BY

DATE: 10/24/17
SCALE: N.T.S.
DWG. BY: JK
CHK. BY: LFS
DRAWING NO.: TX-4730
SHEET 7 OF 11

© 2017 R.W. BUILDING CONSULTANTS INC.

R:\Clients\Therma Tru PERMANENT\B - Texas Dept of Ins\TDI - DR-XXX - 6'8 & 8'0 Glazed Comp Edge Impact\C - Drawings\TX-4729-31.dwg, 7.2

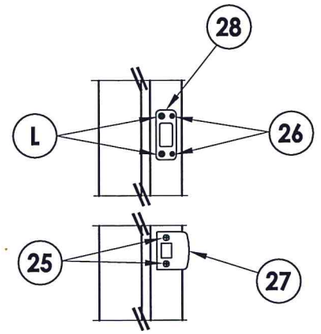

LATCH & DEADBOLT DETAIL
Kwikset

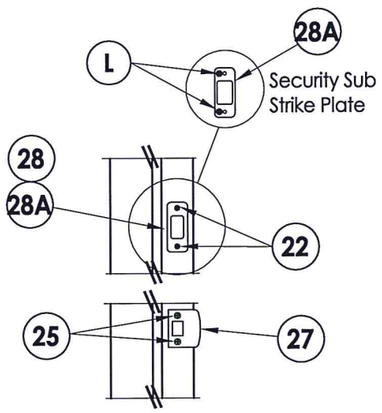

LATCH & DEADBOLT DETAIL
Schlage

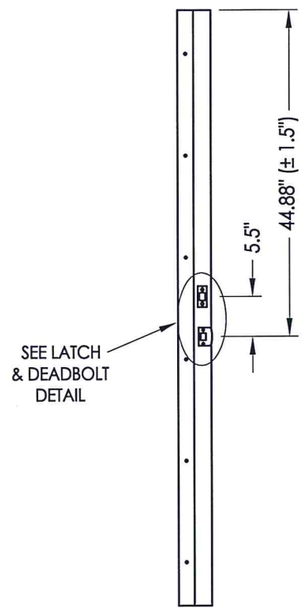

STRIKE JAMB
Latch and Deadbolt

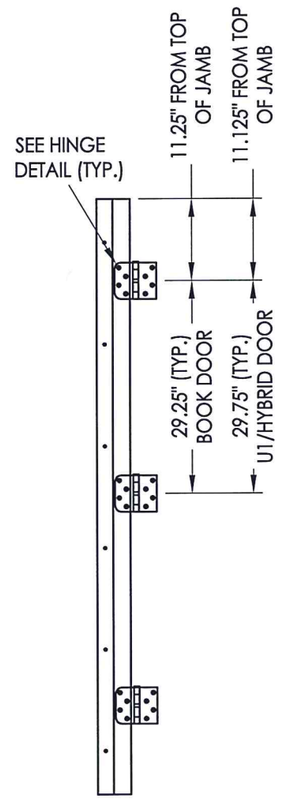

HINGE JAMB

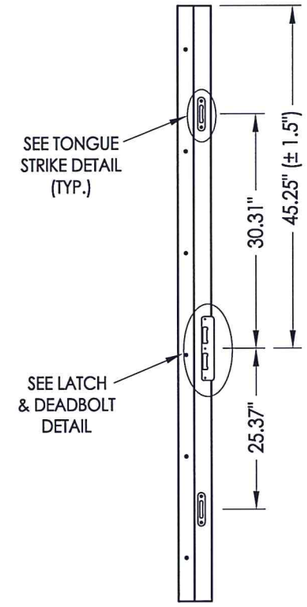

STRIKE JAMB
Multipoint Lock

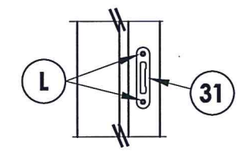

TONGUE STRIKE DETAIL
Multipoint Lock

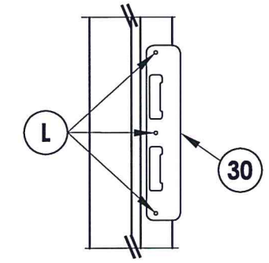

LATCH & DEADBOLT DETAIL
Multipoint Lock

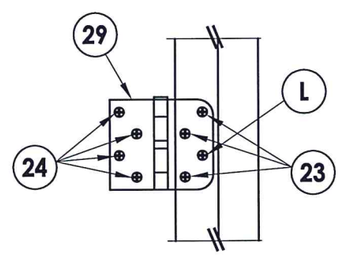

HINGE DETAIL

LATCH & DEADBOLT STRIKE DETAILS

MULTIPOINT LOCK STRIKE DETAILS

STATE OF TEXAS
LYNDON F. SCHMIDT
104123
LICENSED
PROFESSIONAL ENGINEER
10.25.17

Documents Prepared By: Lyndon F. Schmidt, P.E.
TEXAS P.E. #104123
RW BUILDING CONSULTANTS, INC.
P.O. Box 230 Valrico FL. 33595
Phone No.: 813.659.9197
CERTIFICATE OF REGISTRATION # F-11852

PRODUCT: THERMA-TRU FIBERGLASS DOOR

PART OR ASSEMBLY: HARDWARE DETAILS

NO.	DATE	BY

REVISIONS

DATE: 10/24/17
SCALE: N.T.S.
DWG. BY: JK
CHK. BY: LFS
DRAWING NO.: TX-4730
SHEET 8 OF 11

© 2017 R.W. BUILDING CONSULTANTS INC.

R:\Clients\Therma Tru PERMANENT\B - Texas Dept of Ins\TDI - DR-XXX - 6'8 & 8'0 Glazed Comp Edge Impact\C - Drawings\TX-4729-31.dwg, 8.2

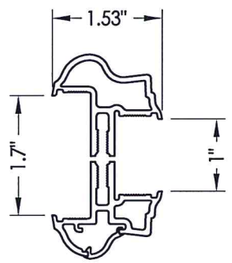

3A ***ALUMINUM FRAME***
Aluminum Impact Lite Frame
Door Panels & Sidelites

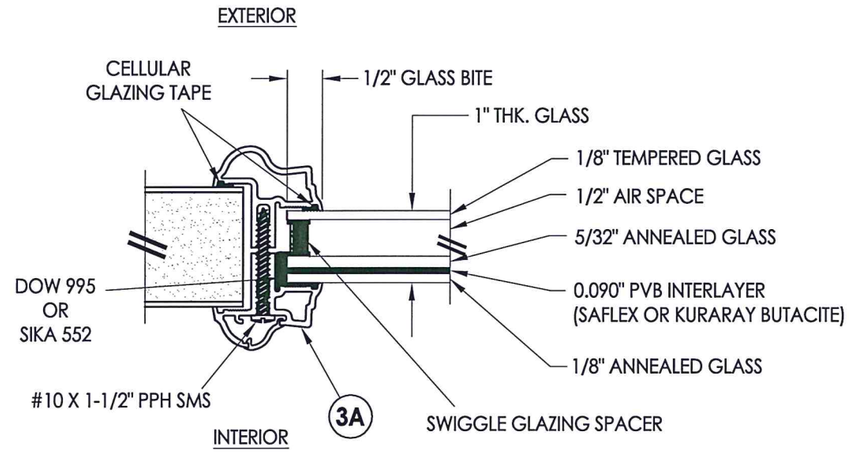

G1 ***GLAZING DETAIL***
Aluminum Impact Lite Frame
Door Panels & Sidelites

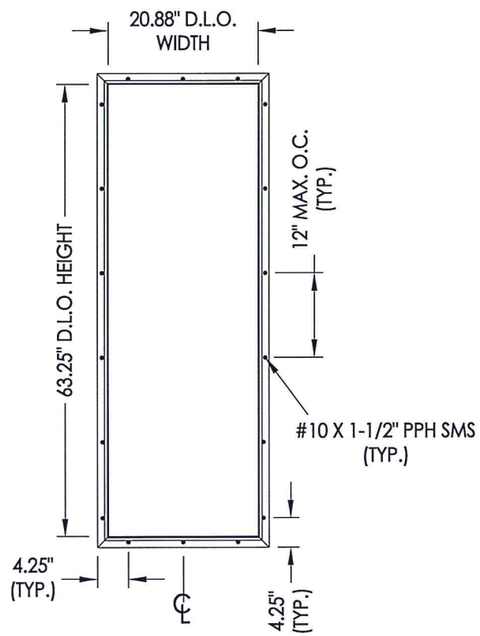

ALUMINUM LITE FRAME

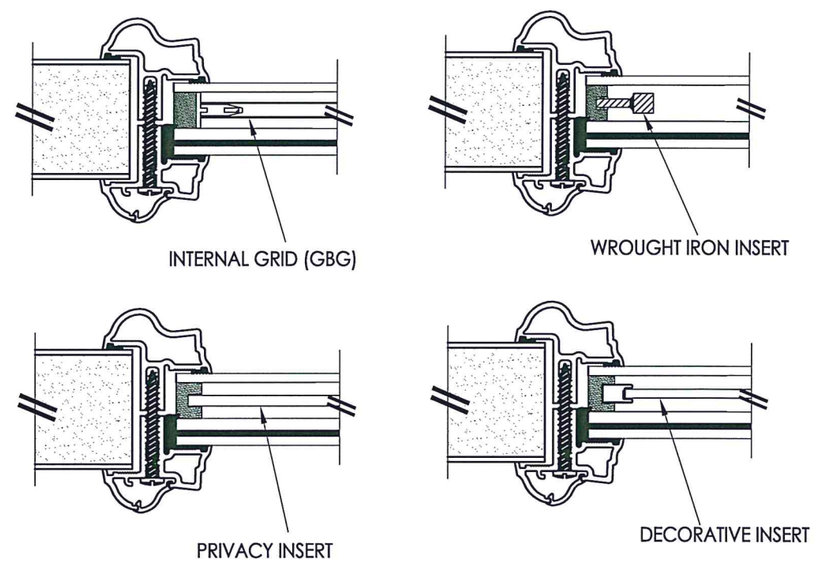

1" LAMINATED INSULATED IMPACT GLASS INSERT OPTIONS

STATE OF TEXAS
LYNDON F. SCHMIDT
104123
LICENSED PROFESSIONAL ENGINEER
11-15-17

Documents Prepared By: Lyndon F. Schmidt, P.E.
TEXAS P.E. #104123
RW BUILDING CONSULTANTS, INC.
P.O. Box 230 Valrico FL 33595
Phone No.: 813.659.9197

CERTIFICATE OF REGISTRATION # F-11852

PRODUCT: THERMA-TRU FIBERGLASS DOOR

PART OR ASSEMBLY: GLAZING DETAILS

NO.	DATE	BY	REVISIONS

DATE: 10/24/17
SCALE: N.T.S.
DWG. BY: JK
CHK. BY: LFS
DRAWING NO.: TX-4730
SHEET 9 OF 11

© 2017 R.W. BUILDING CONSULTANTS INC.

R:\Clients\Therma Tru PERMANENT\B - Texas Dept of Ins\TDI - DR-XXX - 6'8 & 8'0 Glazed Comp Edge Impact\C - Drawings\TX-4729-31.dwg, 9.2

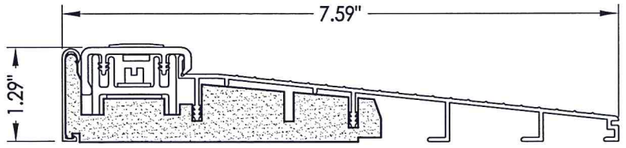

32 INSWING THRESHOLD
Inswing Basic Composite Adjustable Sill 7-1/2"

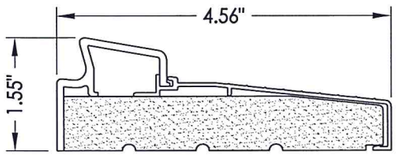

33 INSWING THRESHOLD
Inswing Basic Fixed Sill

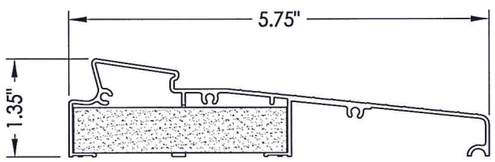

34 INSWING THRESHOLD
Inswing Moderate Climate Sill 1-3/8"

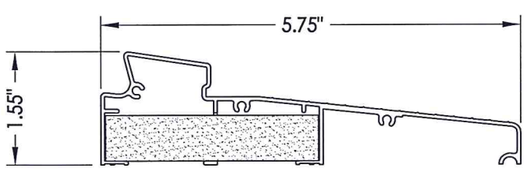

35 INSWING THRESHOLD
Inswing Moderate Climate Sill

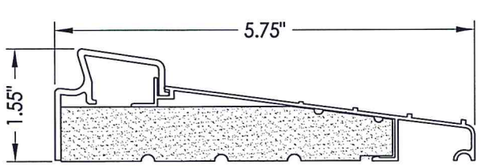

36 INSWING THRESHOLD
Inswing Basic Fixed 5-3/4" Sill

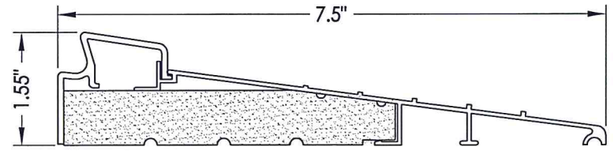

37 INSWING THRESHOLD
Inswing Basic Fixed 7-1/2" Sill

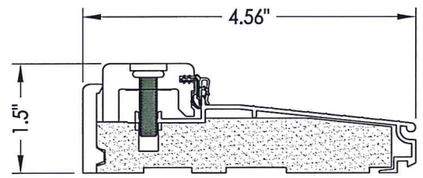

38 INSWING THRESHOLD
Inswing Composite Adjustable Sill

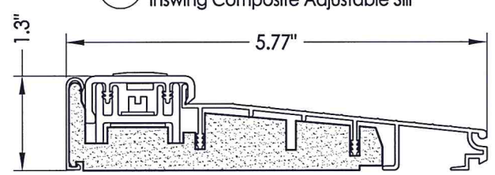

39 INSWING THRESHOLD
Inswing Basic Composite Adjustable Sill

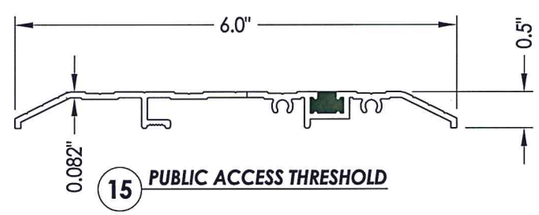

15 PUBLIC ACCESS THRESHOLD

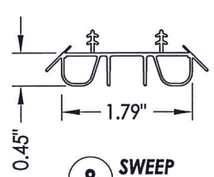

8 SWEEP

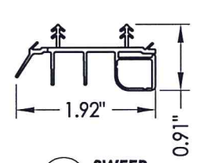

9 SWEEP

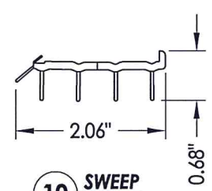

10 SWEEP

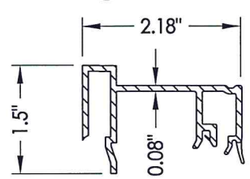

75 SIDELITE SPACER
Inswing

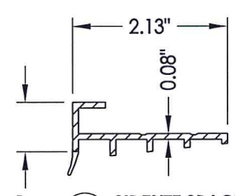

76 SIDELITE SPACER
Outswing

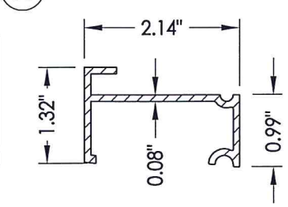

77 SIDELITE SPACER
Inswing
Moderate Climate Threshold

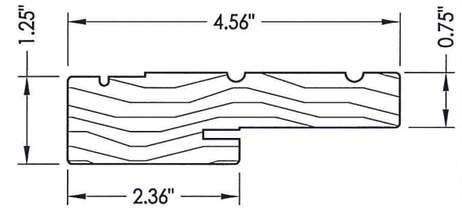

1 WOOD JAMB

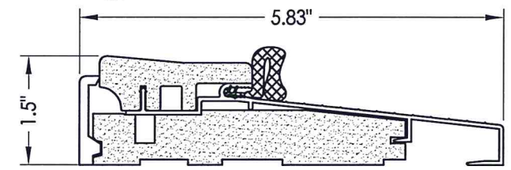

16 OUTSWING THRESHOLD
Composite Sill

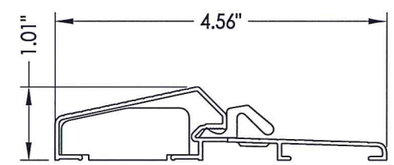

17 OUTSWING THRESHOLD
Composite / Aluminum Sill

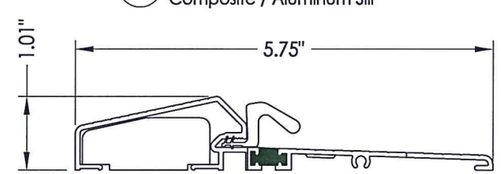

18 OUTSWING THRESHOLD
Composite / Aluminum Sill
(Thermal Break)

STATE OF TEXAS
LYNDON F. SCHMIDT
104123
LICENSED
PROFESSIONAL ENGINEER

Documents Prepared By: Lyndon F. Schmidt, P.E.
TEXAS P.E. #104123

RW BUILDING CONSULTANTS, INC.
P.O. Box 230 Valrico FL. 33595
Phone No.: 813.659.9197

CERTIFICATE OF REGISTRATION # F-11852

PRODUCT: THERMA-TRU FIBERGLASS DOOR

PART OR ASSEMBLY: COMPONENTS

NO.	DATE	BY

REVISIONS

DATE: 10/24/17
SCALE: N.T.S.
DWG. BY: JK
CHK. BY: LFS
DRAWING NO.: TX-4730
SHEET 10 OF 11

© 2017 R.W. Building Consultants Inc.

R:\Clients\Therma Tru PERMANENT\B - Texas Dept of Ins\TDI - DR-XXX - 6'8 & 8'0 Glazed Comp Edge Impact\C - Drawings\TX-4729-31.dwg, 10.2

BILL OF MATERIALS

ITEM #	DESCRIPTION	MATERIAL
A	2X FRAMING (SG >= 0.42)	WOOD
C	1/4" MAX. SHIM SPACE	-
D	1/4" PFH ELCO OR ITW CONCRETE SCREW (1-3/4" MIN. EMBEDMENT)	STEEL
K	#12 PFH WOOD SCREW (1-1/2" MIN. EMBEDMENT)	STEEL
L	#10 X 2-1/2" PFH WOOD SCREW (1.15" MIN. EMBEDMENT)	STEEL
1	JAMB (FINGER JOINT PINE)	WOOD
6	WEATHERSTRIP (MEDIUM REACH)	FOAM
7	WEATHERSTRIP (LONG REACH)	FOAM
8	SWEEP	VINYL
9	SWEEP (USE w/ MODERATE CLIMATE THRESHOLD)	VINYL
10	SWEEP (USE w/ PUBLIC ACCESS THRESHOLD)	VINYL
15	PUBLIC ACCESS THRESHOLD	ALUM
16	OUTSWING THRESHOLD	ALUM/COMP
17	OUTSWING THRESHOLD	ALUM/COMP
18	OUTSWING THRESHOLD	ALUM/COMP
22	#8 x 3/4" PFH WOOD SCREW	STEEL
23	#10 x 3/4" PFH WOOD SCREW	STEEL
24	#10 x 1" PFH WOOD SCREW	STEEL
25	#8 x 2-1/2" PFH WOOD SCREW	STEEL
26	#8 x 5/8" PFH WOOD SCREW	STEEL
27	LATCH STRIKE PLATE	STEEL
28	DEADBOLT SUB STRIKE PLATE	STEEL
28A	DEADBOLT SUB STRIKE PLATE	STEEL
29	4" X 4" HINGE	STEEL
30	LATCH & DEADBOLT STRIKE PLATE (TONGUE SYSTEM)	ALUM/COMP
31	MULTIPOINT STRIKE PLATE (TONGUE SYSTEM)	ALUM/COMP
32	INSWING THRESHOLD	ALUM/COMP
33	INSWING THRESHOLD	ALUM/COMP
34	INSWING THRESHOLD	ALUM/COMP
35	INSWING THRESHOLD	ALUM/COMP
36	INSWING THRESHOLD	ALUM/COMP
37	INSWING THRESHOLD	ALUM/COMP
38	INSWING THRESHOLD	ALUM/COMP
39	INSWING THRESHOLD	ALUM/COMP
40	DOOR PANEL (BOOK)	-
41	DOOR PANEL (HYBRID)	-
42	DOOR PANEL (U1)	-
50	SIDELITE	-
75	SIDELITE SPACER (INSWING)	PVC
76	SIDELITE SPACER (OUTSWING)	PVC
77	SIDELITE SPACER (INSWING) - MODERATE CLIMATE SILL	PVC
88	2X MULLION (SG >= 0.55)	WOOD

CONCRETE ANCHOR NOTES:

1. *Concrete anchor locations at the corners may be adjusted to maintain the min. edge distance to mortar joints.*
2. *Concrete anchor locations noted as "MAX. ON CENTER" must be adjusted to maintain the min. edge distance to mortar joints, additional concrete anchors may be required to ensure the "MAX. ON CENTER" dimension are not exceeded.*
3. *Concrete anchor table:*

ANCHOR TYPE	ANCHOR SIZE	MIN. EMBEDMENT	MIN. CLEARANCE TO MASONRY EDGE	MIN. CLEARANCE TO ADJACENT ANCHOR
ITW TAPCON®	1/4"	1-3/4"	2"	4"
ELCO ULTRACON®	1/4"	1-3/4"	1"	4"

WOOD SCREW INSTALLATION NOTES:

1. *Maintain a minimum 5/8" edge distance, 1" end distance, & 1" o.c. spacing of wood screws to prevent the splitting of wood.*

STATE OF TEXAS
LYNDON F. SCHMIDT
104123
LICENSED PROFESSIONAL ENGINEER

Documents Prepared By: Lyndon F. Schmidt, P.E.
TEXAS P.E. #104123

RW BUILDING CONSULTANTS, INC.
P.O. Box 230 Valrico FL. 33595
Phone No.: 813.659.9197

CERTIFICATE OF REGISTRATION # F-11852

PRODUCT: THERMA-TRU FIBERGLASS DOOR

PART OR ASSEMBLY: BILL OF MATERIALS

REVISIONS

NO.	DATE	BY

DATE: 10/24/17
SCALE: N.T.S.
DWG. BY: JK
CHK. BY: LFS
DRAWING NO.: TX-4730
SHEET 11 OF 11

© 2017 R.W. BUILDING CONSULTANTS INC.

R:\Clients\Therma Tru PERMANENT\B - Texas Dept of Ins\TDI - DR-XXX - 6'8 & 8'0 Glazed Comp Edge Impact\C - Drawings\TX-4729-31.dwg, 11.2