THERMA-TRU® DOORS

Classic-Craft®

OPAQUE FIBERGLASS SINGLE DOOR w/ SIDELITE(S)

INSWING "NON-IMPACT"

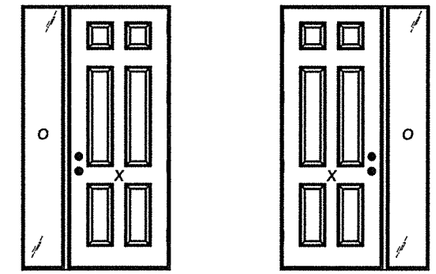

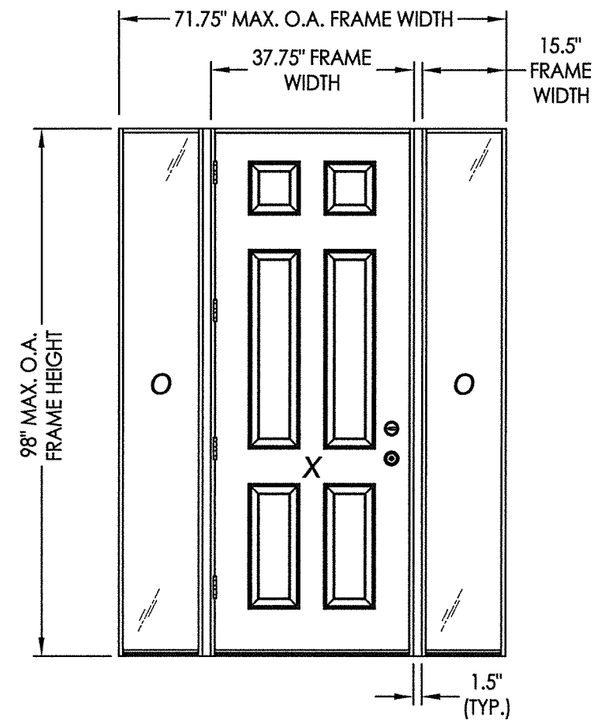

EVALUATED FOR USE IN THE STATE OF TEXAS

The Fiberglass Door system described herein complies with the 2018 International Residential Code (IRC), Sections R301 & R609 and the 2018 International Building Code (IBC), Sections 1404.13, 1609, 1709.5, 2403 and 2404 subject to the following conditions:

1. Anchors shall be as listed and spaced as shown in the details. Anchor embedment to base material shall be beyond wall dressing or stucco.
2. When used in areas requiring wind-borne debris protection this product is required to be protected with an impact resistant covering that complies with Section R301.2.1.2 of the IRC and Section 1609.1.2 of the IBC.
3. Allowable design pressure requirements must be equal to or less than the design pressure rating shown in the design pressure chart, sheet 1 of this drawing.
4. Conditions not covered by this drawing are subject to further engineering analysis.

TABLE OF CONTENTS

SHEET #	DESCRIPTION	SHEET #	
1	Typical Elevations, Design Pressures & General Notes	6	Vertical Cross Sections
2	Door Panel Details	7	Frame Anchoring
3	Sidelite Panel Details	8	Hardware Details
4	Elevations	9	Bill of Materials & Components
5	Horizontal Cross Sections		

CONFIGURATION	2X REINFORCEMENT REQUIRED	DESIGN PRESSURE (PSF) w/ FJ PINE JAMBS		DESIGN PRESSURE (PSF) w/ COMPOSITE JAMBS	
		POSITIVE	NEGATIVE	POSITIVE	NEGATIVE
XO, OX, OXO	NO	+40.0	-45.0	+30.0	-40.0
	YES	+50.0	-55.0	+50.0	-55.0

STATE OF TEXAS
LYNDON F. SCHMIDT
104123
LICENSED PROFESSIONAL ENGINEER
3-1-21

Documents Prepared By: Lyndon F. Schmidt, P.E. TEXAS P.E. #104123

RW BUILDING CONSULTANTS, INC.
P.O. Box 230 Valrico FL. 33595
Phone No.: 813.659.9197

TEXAS BOARD OF PROFESSIONAL ENGINEERS CERTIFICATE OF REGISTRATION # F-11852

PRODUCT: THERMA-TRU FIBERGLASS DOOR

PART OR ASSEMBLY: TYPICAL ELEVATION, DESIGN PRESSURES & GENERAL NOTES

NO.	DATE	REVISIONS	BY

DATE: 1/06/21
SCALE: N.T.S.
DWG. BY: RW
CHK. BY: LFS
DRAWING NO.: TX-5156
SHEET 1 OF 9

© 2021 R.W. BUILDING CONSULTANTS INC.

Z:\Clients\Therma Tru PERMANENT\B - Texas Dept of Ins\TDI - DR XXX - 6'8, 7' & 8' CC Opaque FG NonImp IS Dir Set Sidelites (TX 5152-5157)\C - Drawings\TX-5156-57.dwg

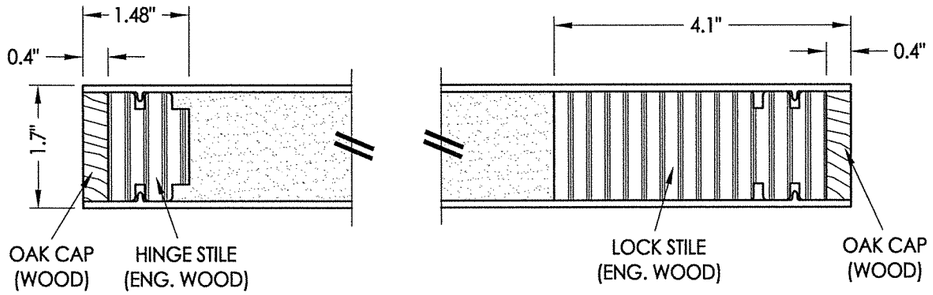

1/2 **HORIZONTAL CROSS SECTION**

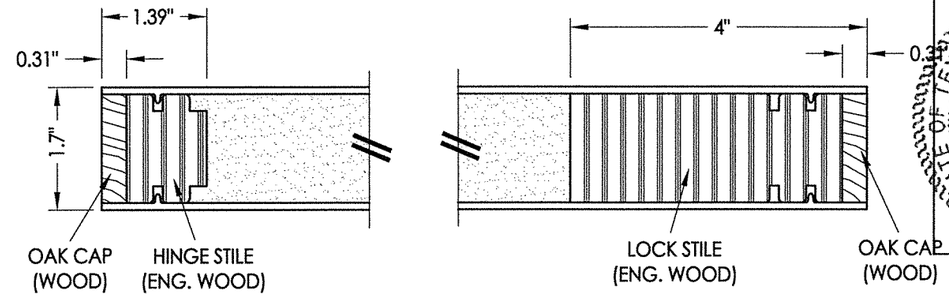

2/2 **HORIZONTAL CROSS SECTION**

STATE OF TEXAS
LYNDON F. SCHMIDT
104123
LICENSED
PROFESSIONAL ENGINEER
3.1.21

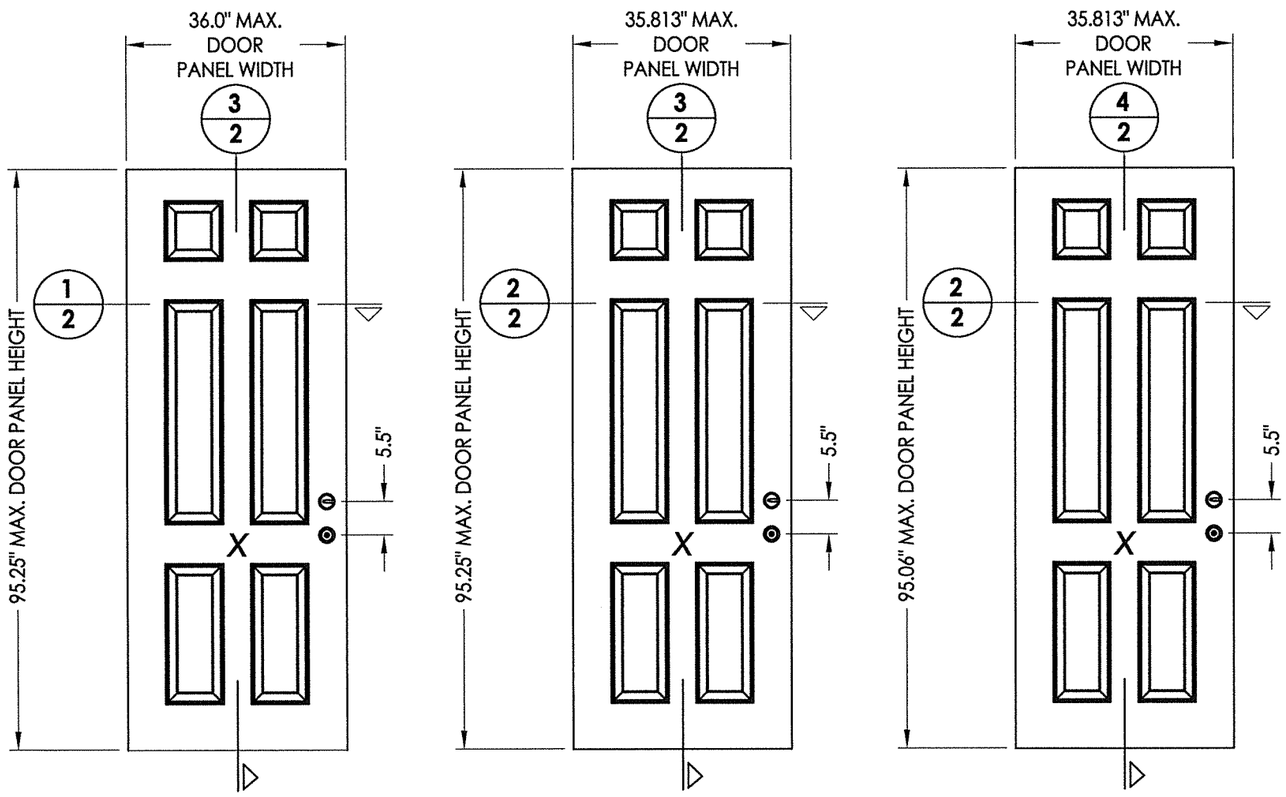

40 **DOOR PANEL** BOOK

41 **DOOR PANEL** Hybrid Door

42 **DOOR PANEL** U1 Door

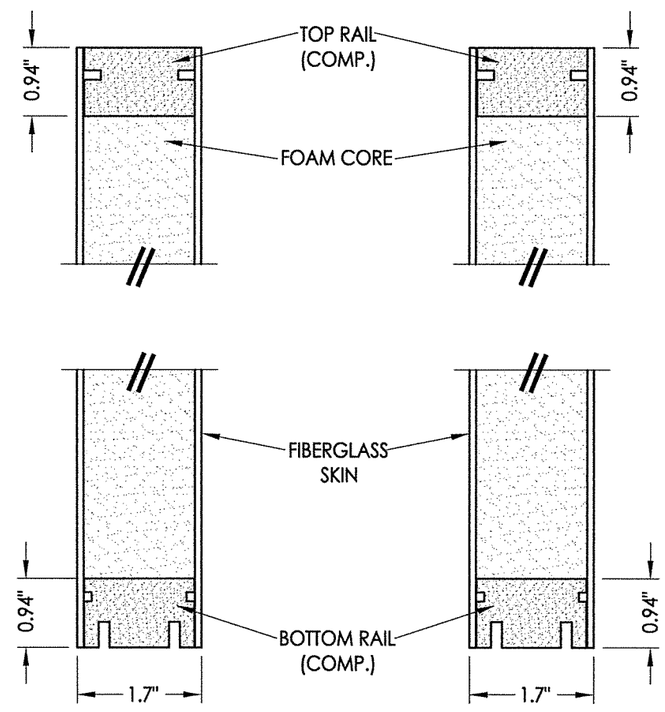

3/2 **VERTICAL CROSS SECTION**

4/2 **VERTICAL CROSS SECTION**

"Classic Craft" SERIES DOOR PANEL

FIBERGLASS DOOR SKIN: 0.125" MIN. THK.
FOAM CORE: POLYURETHANE FOAM (1.9 PCF MIN.)

Documents Prepared By: Lyndon F. Schmidt, P.E. TEXAS P.E. #104123

RW BUILDING CONSULTANTS, INC.
P.O. Box 230 Valrico FL. 33595
Phone No.: 813.659.9197

TEXAS BOARD OF PROFESSIONAL ENGINEERS CERTIFICATE OF REGISTRATION # F-11852

PRODUCT: THERMA-TRU FIBERGLASS DOOR

PART OR ASSEMBLY: DOOR PANEL DETAILS

NO.	DATE	REVISIONS	BY

DATE: 1/06/21
SCALE: N.T.S.
DWG. BY: RW
CHK. BY: LFS
DRAWING NO.: TX-5156
SHEET 2 OF 9

© 2021 R.W. BUILDING CONSULTANTS INC.

Z:\Clients\Therma Tru PERMANENT\B - Texas Dept of Ins\TDI - DR XXX - 6'8, 7' & 8' CC Opaque FG NonImp IS Dir Set Sidelites (TX 5152-5157)\C - Drawings\TX-5156-57.dwg

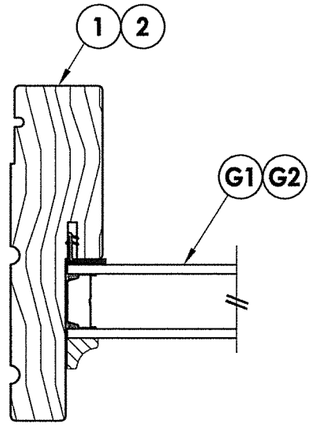

1/3 **HORIZONTAL CROSS SECTION**

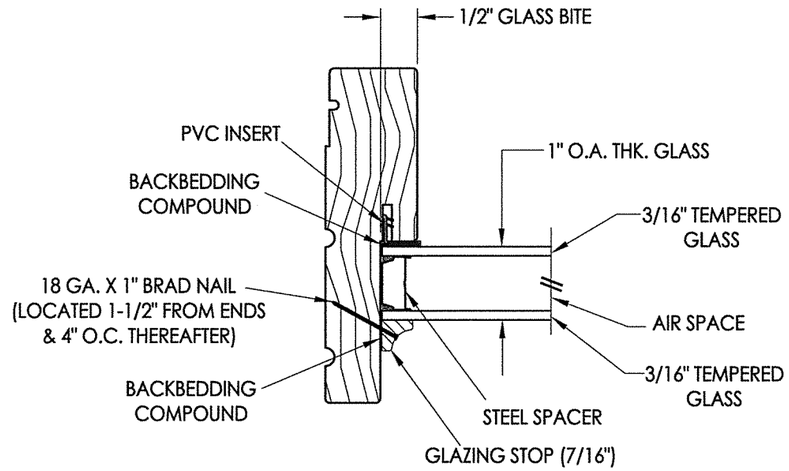

G1 **GLAZING DETAIL**
1" Insulated Glass

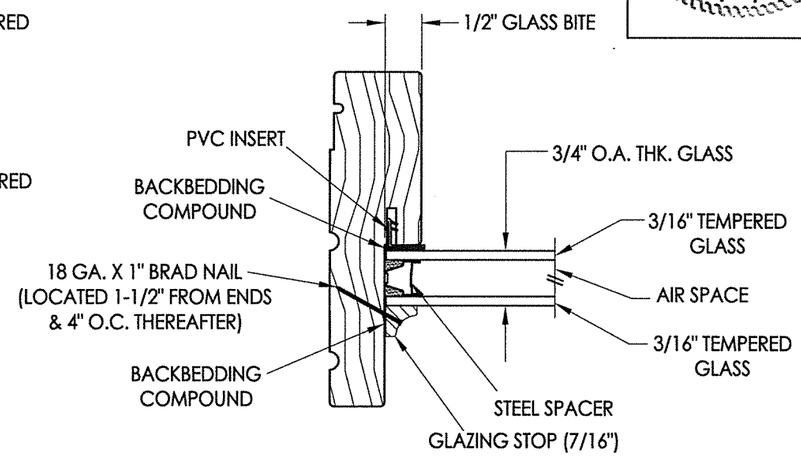

G2 **GLAZING DETAIL**
3/4" Insulated Glass

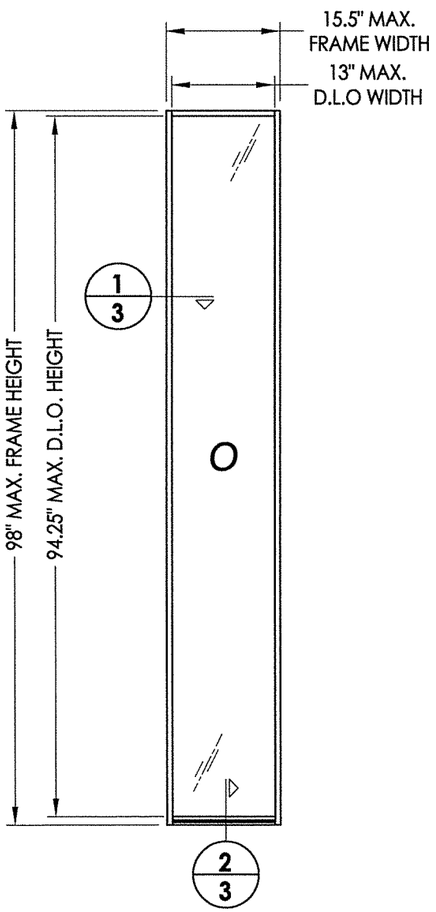

50 **SIDELITE PANEL**

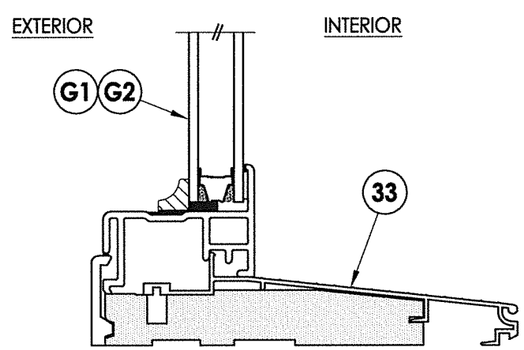

2/3 **VERTICAL CROSS SECTION**

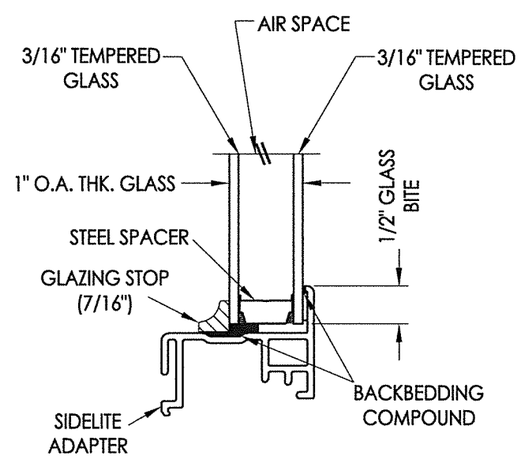

G1 **GLAZING DETAIL**
1" Insulated Glass

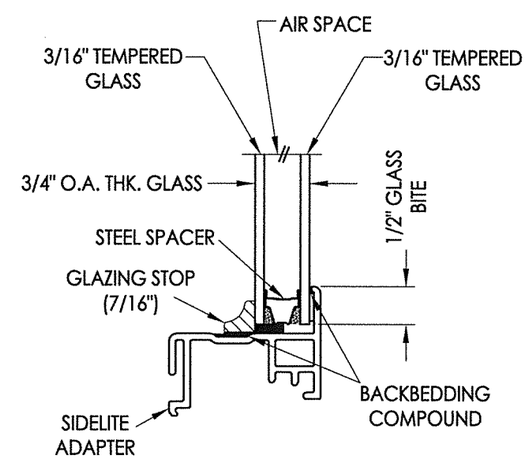

G2 **GLAZING DETAIL**
3/4" Insulated Glass

STATE OF TEXAS
LYNDON F. SCHMIDT
104123
LICENSED PROFESSIONAL ENGINEER
1.12.21

Documents Prepared By: Lyndon F. Schmidt, P.E. TEXAS P.E. #104123

RW BUILDING CONSULTANTS, INC.
P.O. Box 230 Valrico FL. 33595
Phone No.: 813.659.9197

TEXAS BOARD OF PROFESSIONAL ENGINEERS CERTIFICATE OF REGISTRATION # F-11852

PRODUCT: THERMA-TRU FIBERGLASS DOOR

PART OR ASSEMBLY: SIDELITE PANEL DETAILS

NO.	DATE	REVISIONS	BY

DATE: 1/06/21
SCALE: N.T.S.
DWG. BY: RW
CHK. BY: LFS
DRAWING NO.: TX-5156
SHEET 3 OF 9

© 2021 R.W. BUILDING CONSULTANTS INC.

Z:\Clients\Therma Tru PERMANENT\B - Texas Dept of Ins\TDI - DR XXX - 6'8, 7' & 8' CC Opaque FG NonImp IS Dir Set Sidelites (TX 5152-5157)\C - Drawings\TX-5156-57.dwg

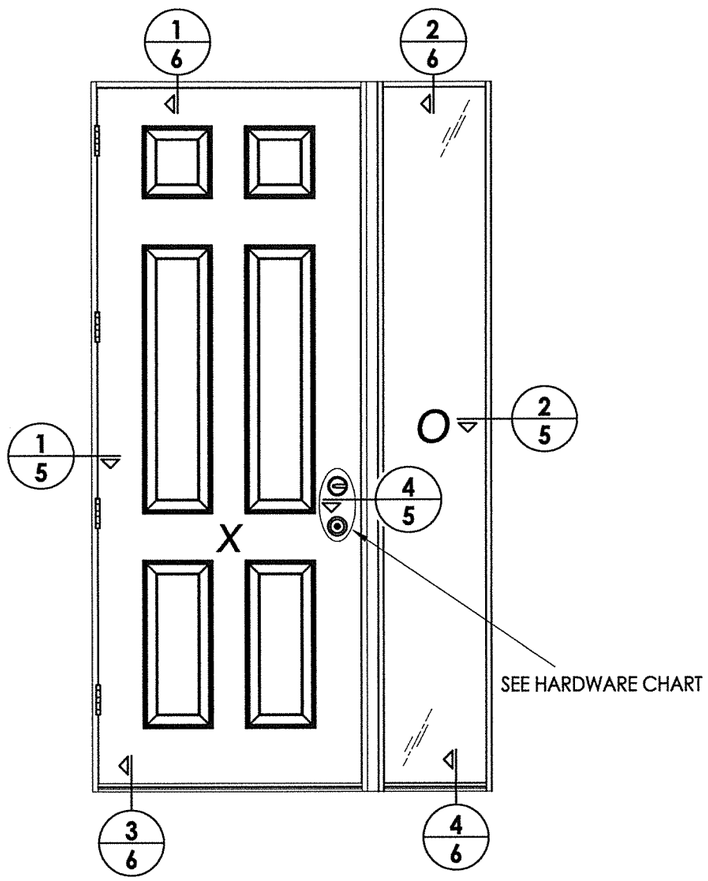

ELEVATION
XO

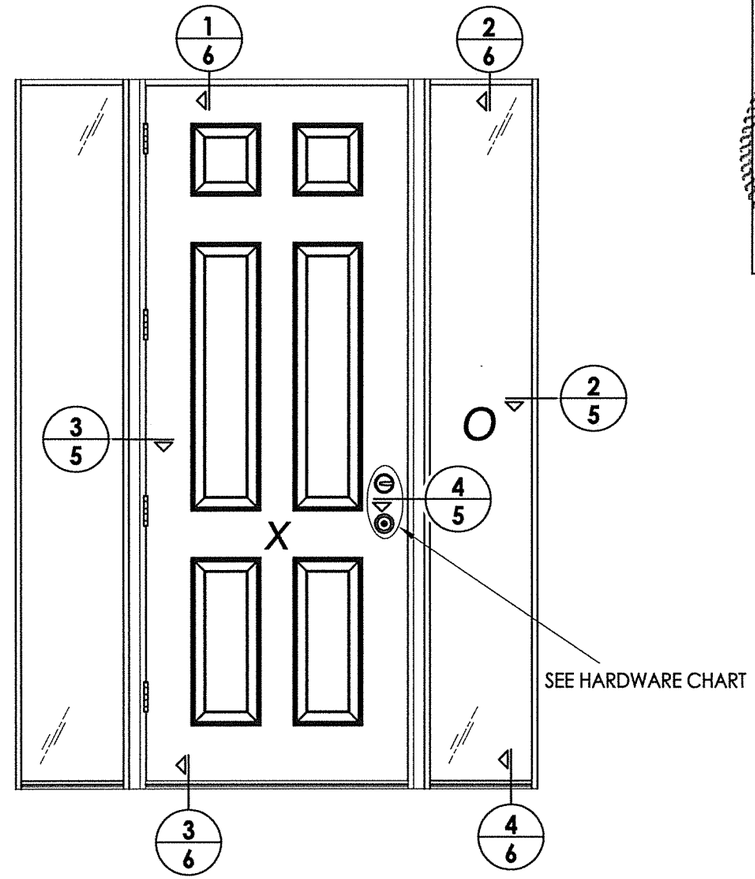

ELEVATION
OXO

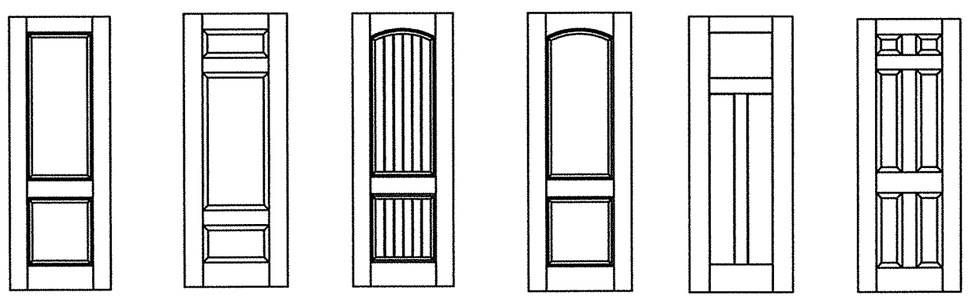

Classic Craft Door Panel Options

Panel options shown are for illustration and are representative only
(similar opaque panel configurations are allowed)

HARDWARE TABLE		
MANUFACTURER	MODEL	
SCHLAGE	KNOB:	F51
	DEADBOLT:	B60
KWIKSET	KNOB:	SIGNATURE SERIES
	DEADBOLT:	SIGNATURE SERIES (980)

STATE OF TEXAS
LYNDON F. SCHMIDT
104123
LICENSED
PROFESSIONAL ENGINEER

Documents Prepared By: Lyndon F. Schmidt, P.E.
TEXAS P.E. #104123

RW BUILDING CONSULTANTS, INC.
P.O. Box 230 Valrico FL. 33595
Phone No.: 813.659.9197

TEXAS BOARD OF PROFESSIONAL ENGINEERS
CERTIFICATE OF REGISTRATION # F-11852

PRODUCT: THERMA-TRU FIBERGLASS DOOR

PART OR ASSEMBLY: ELEVATIONS

NO.	DATE	BY

REVISIONS

DATE: 1/06/21
SCALE: N.T.S.
DWG. BY: RW
CHK. BY: LFS
DRAWING NO.: TX-5156
SHEET 4 OF 9

© 2021 R.W. BUILDING CONSULTANTS INC.

Z:\Clients\Therma Tru PERMANENT\B - Texas Dept of Ins\TDI - DR XXX - 6'8, 7' & 8' CC Opaque FG NonImp IS Dir Set Sidelites (TX 5152-5157)\C - Drawings\TX-5156-57.dwg

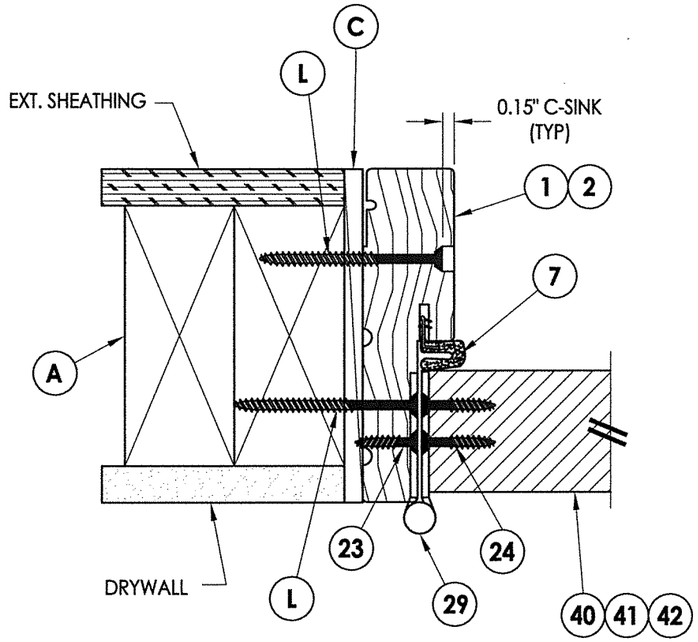

1/5 **HORIZONTAL CROSS SECTION**

EXTERIOR

INTERIOR

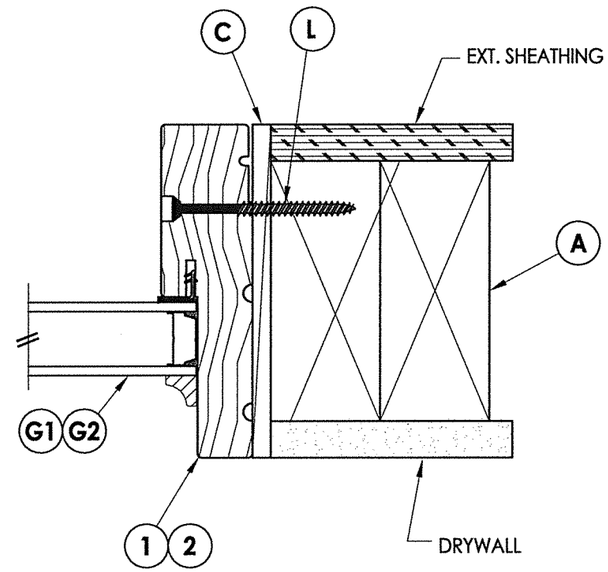

2/5 **HORIZONTAL CROSS SECTION**

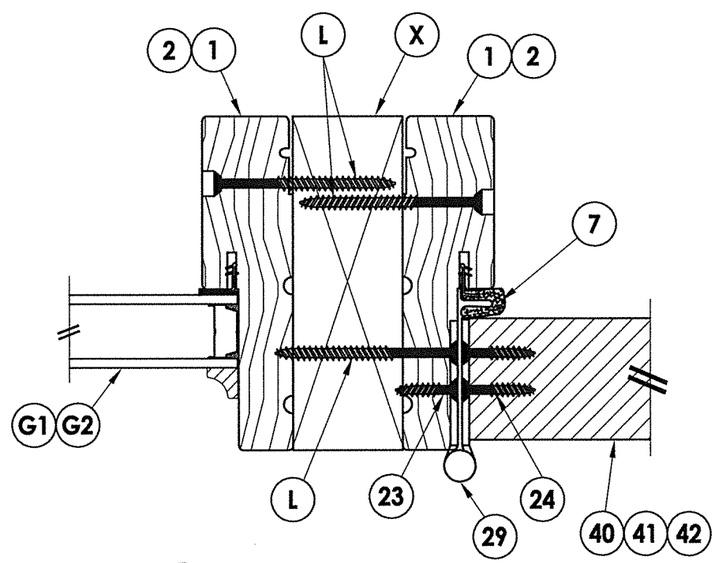

3/5 **HORIZONTAL CROSS SECTION**
Shown w/ 2X Reinforcement

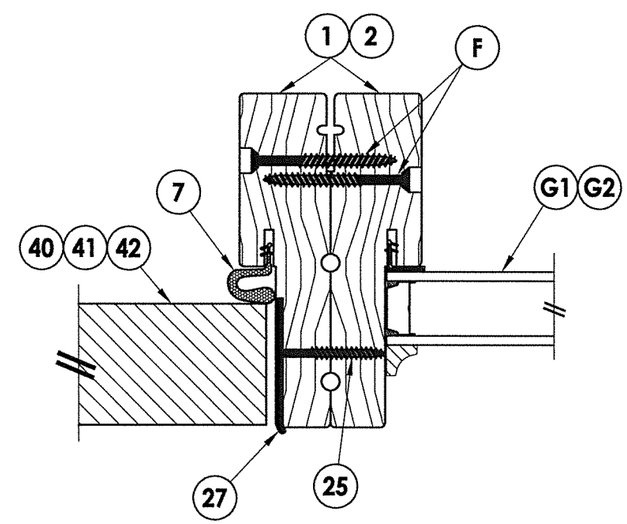

4/5 **HORIZONTAL CROSS SECTION**
Shown w/ Back-to-Back Jambs

STATE OF TEXAS
LYNDON F. SCHMIDT
104123
LICENSED
PROFESSIONAL ENGINEER
3.1.21

Documents Prepared By: Lyndon F. Schmidt, P.E.
TEXAS P.E. #104123

RW BUILDING CONSULTANTS, INC.
P.O. Box 230 Valrico FL. 33595
Phone No.: 813.659.9197

TEXAS BOARD OF PROFESSIONAL ENGINEERS
CERTIFICATE OF REGISTRATION # F-11852

PRODUCT: THERMA-TRU FIBERGLASS DOOR

PART OR ASSEMBLY: HORIZONTAL CROSS SECTIONS

NO.	DATE	REVISIONS	BY

DATE: 1/06/21
SCALE: N.T.S.
DWG. BY: RW
CHK. BY: LFS
DRAWING NO.: TX-5156
SHEET 5 OF 9

© 2021 R.W. BUILDING CONSULTANTS INC.

Z:\Clients\Therma Tru PERMANENT\B - Texas Dept of Ins\TDI - DR XXX - 6'8, 7' & 8' CC Opaque FG NonImp IS Dir Set Sidelites (TX 5152-5157)\C - Drawings\TX-5156-57.dwg

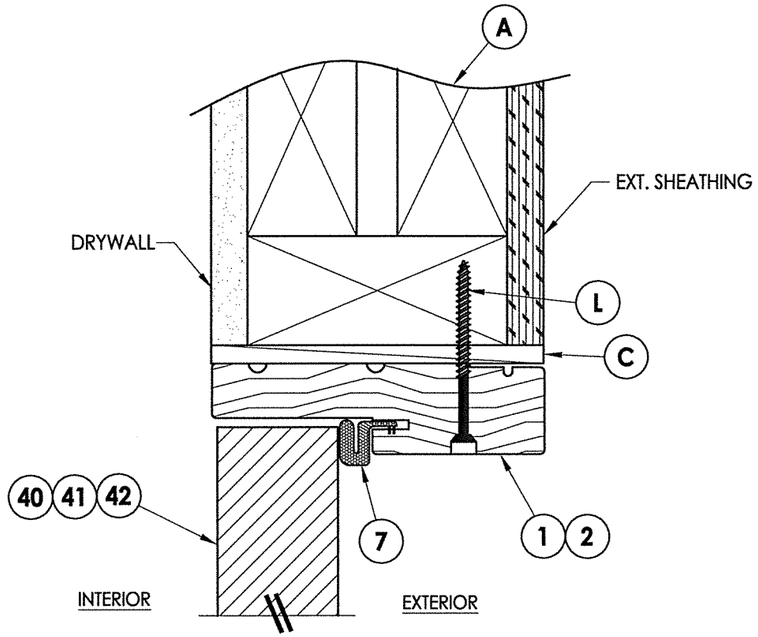

1/6 **VERTICAL CROSS SECTION**

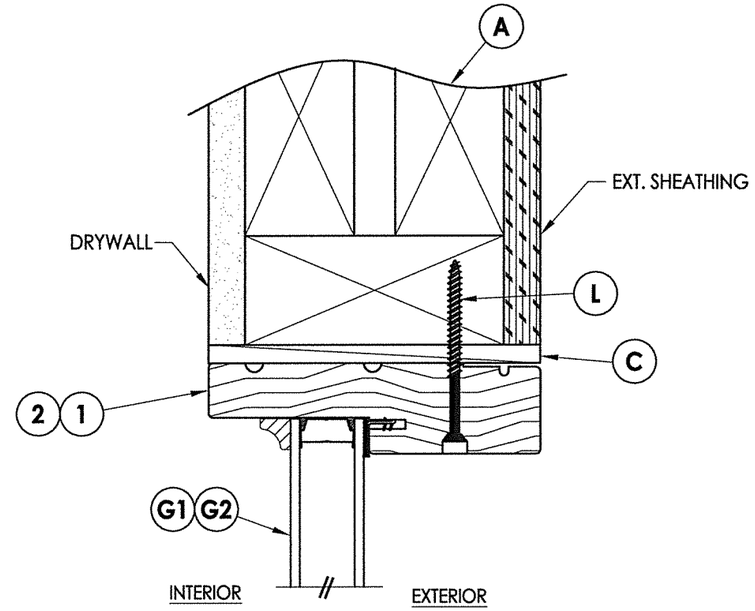

2/6 **VERTICAL CROSS SECTION**

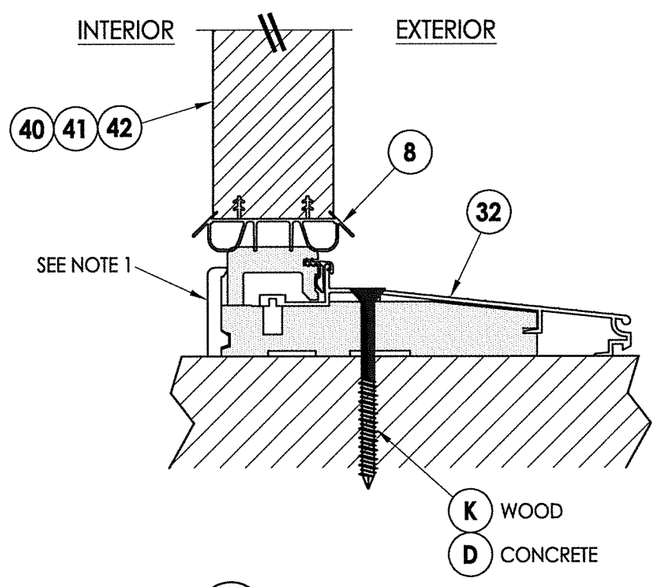

3/6 **VERTICAL CROSS SECTION**
Inswing Sill

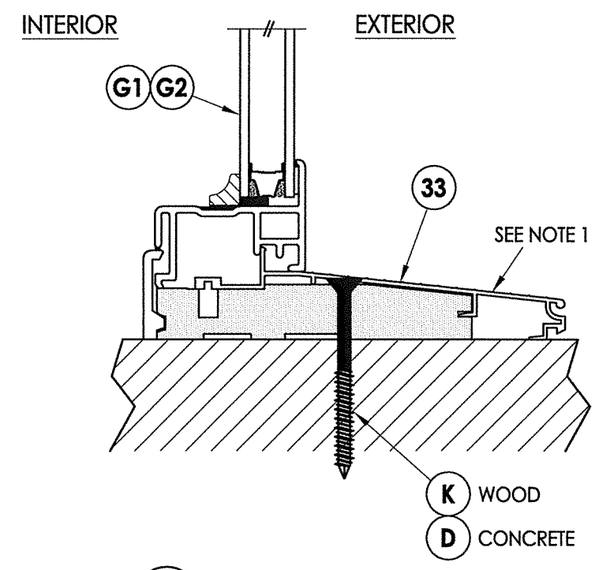

4/6 **VERTICAL CROSS SECTION**
Inswing Sill

Note:
1. Sill Item #'s 32 & 33 are attached to jambs w/ (3) #8 X 2-1/2" FH screws at each end.

STATE OF TEXAS
LYNDON F. SCHMIDT
104123
LICENSED PROFESSIONAL ENGINEER
3.1.21

Documents Prepared By: Lyndon F. Schmidt, P.E.
TEXAS P.E. #104123
RW BUILDING CONSULTANTS, INC.
P.O. Box 230 Valrico FL. 33595
Phone No.: 813.659.9197
TEXAS BOARD OF PROFESSIONAL ENGINEERS
CERTIFICATE OF REGISTRATION # F-11852

PRODUCT: THERMA-TRU FIBERGLASS DOOR

PART OR ASSEMBLY: VERTICAL CROSS SECTIONS

NO.	DATE	REVISIONS	BY

DATE: 1/06/21
SCALE: N.T.S.
DWG. BY: RW
CHK. BY: LFS
DRAWING NO.: TX-5156
SHEET 6 OF 9

© 2021 R.W. BUILDING CONSULTANTS INC.

Z:\Clients\Therma Tru PERMANENT\B - Texas Dept of Ins\TDI - DR XXX - 6'8, 7' & 8' CC Opaque FG NonImp IS Dir Set Sidelites (TX 5152-5157)\C - Drawings\TX-5156-57.dwg

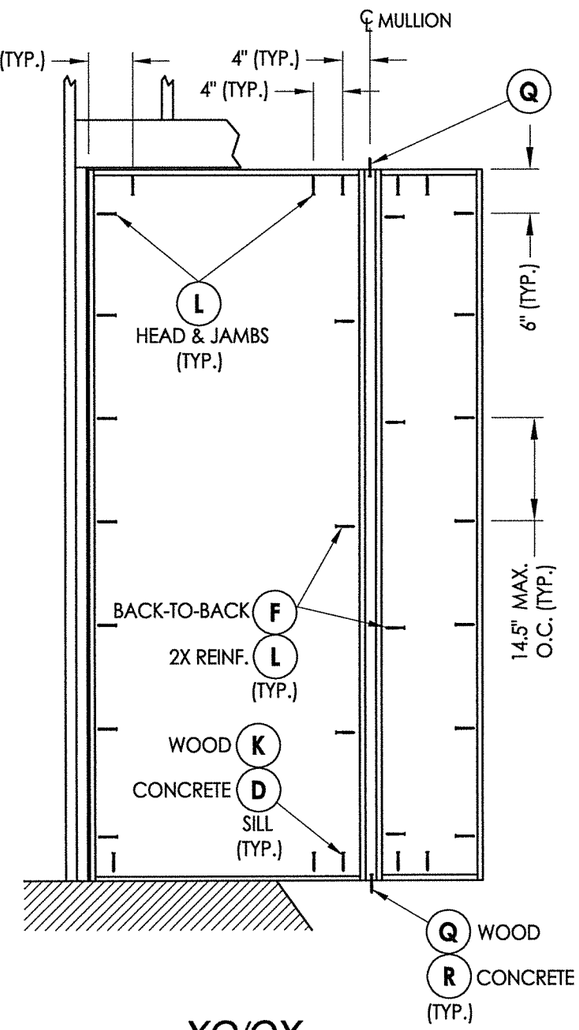

XO/OX

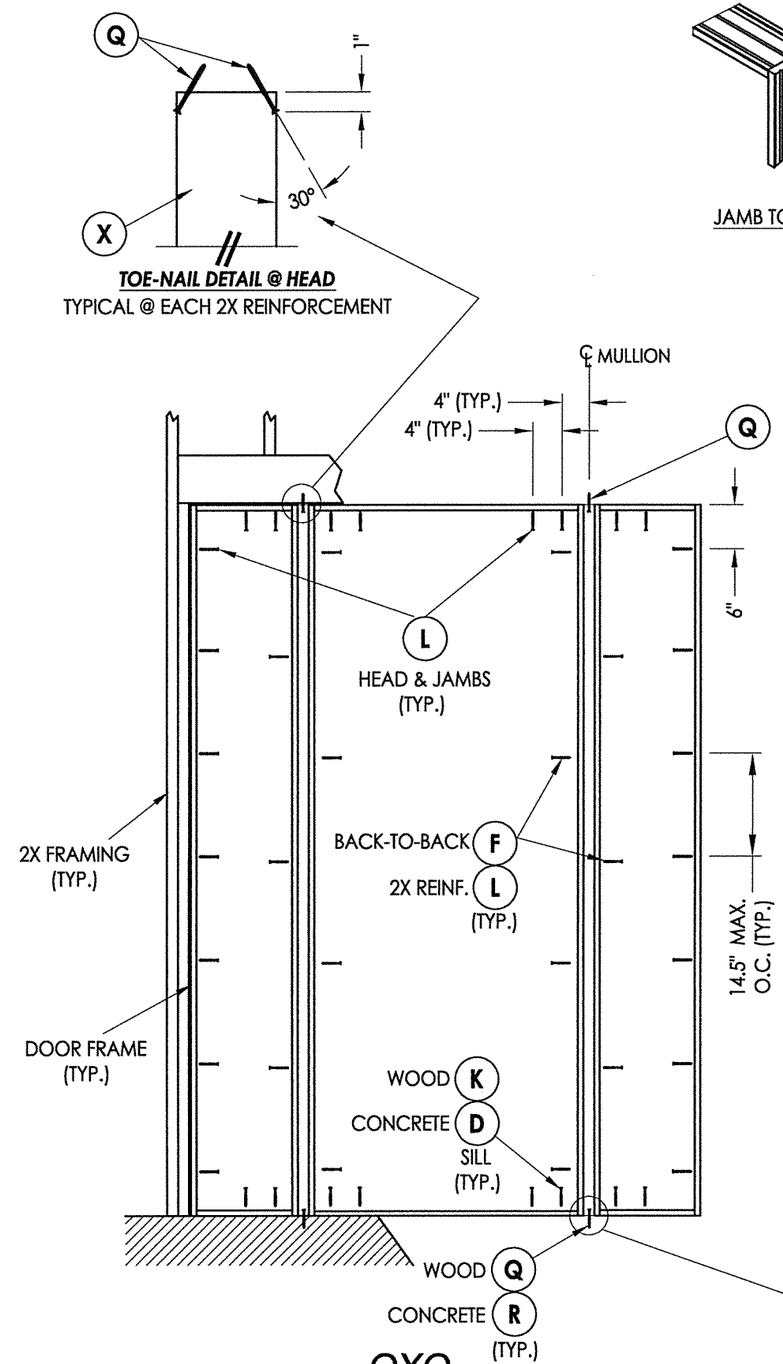

OXO

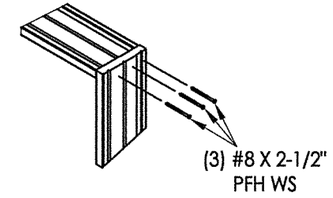

JAMB TO HEAD DETAIL
(TYP.)

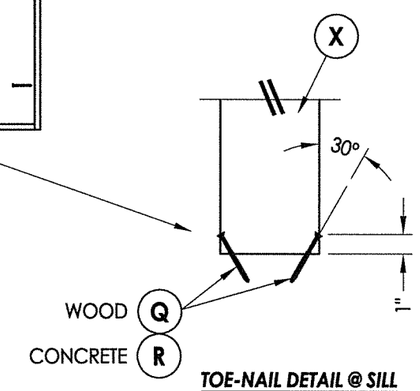

TOE-NAIL DETAIL @ SILL
TYPICAL @ EACH 2X REINFORCEMENT

FRAME ANCHORING

Z:\Clients\Therma Tru PERMANENT\B - Texas Dept of Ins\TDI - DR XXX - 6'8, 7' & 8' CC Opaque FG NonImp IS Dir Set Sidelites (TX 5152-5157)\C - Drawings\TX-5156-57.dwg

STATE OF TEXAS
LYNDON F. SCHMIDT
104123
LICENSED
PROFESSIONAL ENGINEER
1/6/21

Documents Prepared By: Lyndon F. Schmidt, P.E.
TEXAS P.E. #104123

RW BUILDING CONSULTANTS, INC.
P.O. Box 230 Valrico FL. 33595
Phone No.: 813.659.9197

TEXAS BOARD OF PROFESSIONAL ENGINEERS
CERTIFICATE OF REGISTRATION # F-11852

PRODUCT: THERMA-TRU FIBERGLASS DOOR

PART OR ASSEMBLY: FRAME ANCHORING

NO.	DATE	REVISIONS	BY

DATE: 1/06/21
SCALE: N.T.S.
DWG. BY: RW
CHK. BY: LFS
DRAWING NO.: TX-5156
SHEET 7 OF 9

© 2021 R.W. BUILDING CONSULTANTS INC.

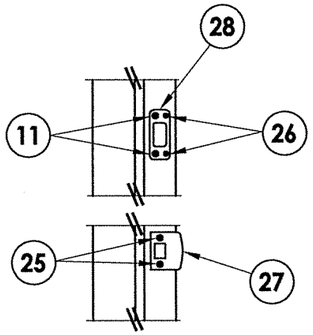

LATCH & DEADBOLT DETAIL
Kwikset

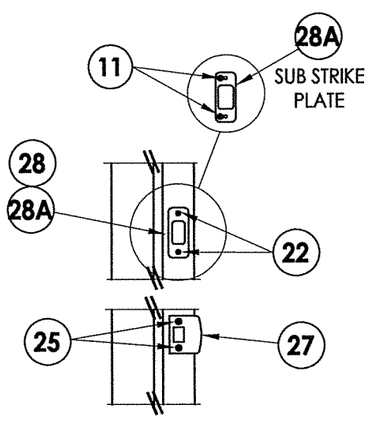

LATCH & DEADBOLT DETAIL
Schlage

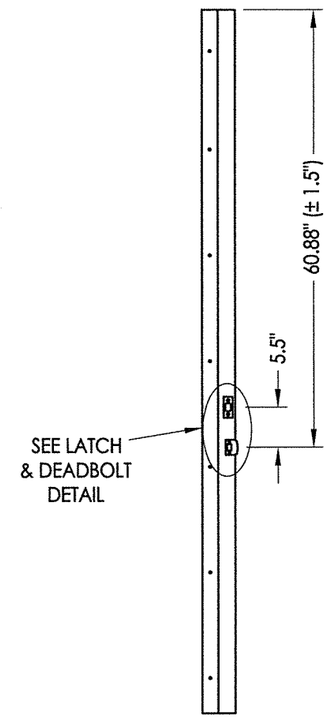

STRIKE JAMB
Latch & Deadbolt

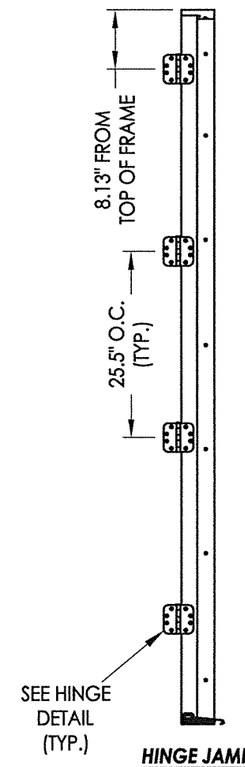

HINGE JAMB

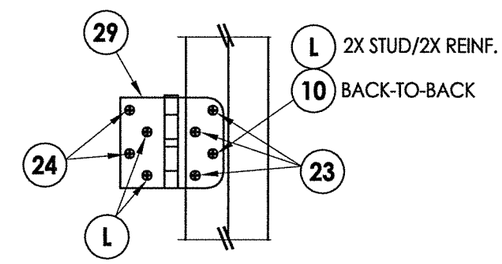

HINGE DETAIL

LATCH & DEADBOLT STRIKE DETAILS

STATE OF TEXAS
LYNDON F. SCHMIDT
104123
LICENSED PROFESSIONAL ENGINEER

Documents Prepared By: Lyndon F. Schmidt, P.E.
TEXAS P.E. #104123

RW BUILDING CONSULTANTS, INC.
P.O. Box 230 Valrico FL. 33595
Phone No.: 813.659.9197

TEXAS BOARD OF PROFESSIONAL ENGINEERS
CERTIFICATE OF REGISTRATION # F-11852

PRODUCT: THERMA-TRU FIBERGLASS DOOR

PART OR ASSEMBLY: HARDWARE DETAILS

NO.	DATE	BY

REVISIONS

DATE: 1/06/21
SCALE: N.T.S.
DWG. BY: RW
CHK. BY: LFS
DRAWING NO.: TX-5156
SHEET 8 OF 9

© 2021 R.W. BUILDING CONSULTANTS INC.

Z:\Clients\Therma Tru PERMANENT\B - Texas Dept of Ins\TDI - DR XXX - 6'8, 7' & 8' CC Opaque FG NonImp IS Dir Set Sidelites (TX 5152-5157)\C - Drawings\TX-5156-57.dwg

BILL OF MATERIALS

ITEM #	DESCRIPTION	MATERIAL
B	2X BUCK (G >= 0.42)	WOOD
C	1/4" MAX. SHIM SPACE	-
D	1/4" PFH DeWALT OR ITW CONCRETE SCREW	STEEL
F	#10 X 2" PFH WOOD SCREW	STEEL
L	#10 X 2-1/2" PFH WOOD SCREW (1.15" MIN. EMBEDMENT)	STEEL
Q	#10 X 3" PFH WOOD SCREW (1.75" MIN. EMBEDMENT)	STEEL
R	3/16" X 3-1/4" ITW CONCRETE SCREW	STEEL
X	2X REINFORCEMENT (SG = 0.55)	WOOD
1	WOOD JAMB (FINGER JOINT PINE)	WOOD
2	COMPOSITE JAMB	COMP
7	WEATHERSTRIP	FOAM
8	DOOR SWEEP	VINYL
10	#10 X 1-1/2" PFH WOOD SCREW	STEEL
11	#12 X 1-1/2" PFH WOOD SCREW	STEEL
22	#8 X 3/4" PFH WOOD SCREW	STEEL
23	#9 X 3/4" PFH WOOD SCREW	STEEL
24	#9 X 1" PFH WOOD SCREW	STEEL
25	#8 X 1-1/2" PFH WOOD SCREW	STEEL
26	#8 X 5/8" PFH WOOD SCREW	STEEL
27	LATCH STRIKE PLATE	STEEL
28	DEADBOLT STRIKE PLATE	STEEL
28A	DEADBOLT SUB STRIKE PLATE	STEEL
29	4" X 4" HINGE	STEEL
32	INSWING THRESHOLD	ALUM/COMP
33	INSWING THRESHOLD w/ SIDELITE ADAPTER	ALUM/COMP
40	DOOR PANEL (BOOK)	-
41	DOOR PANEL (HYBRID)	-
42	DOOR PANEL (U1)	-

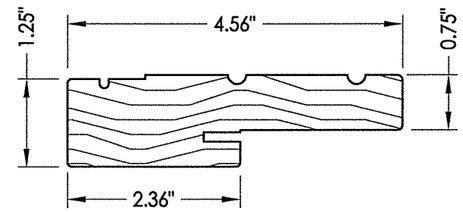

1 **WOOD JAMB**

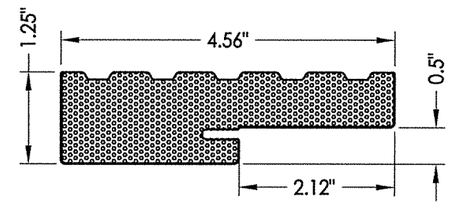

2 **COMPOSITE JAMB**

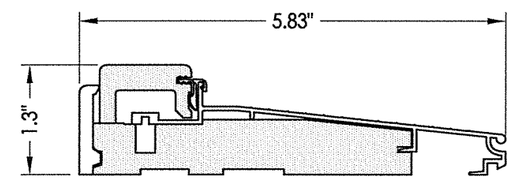

32 **INSWING THRESHOLD**
Adjustable Composite Sill

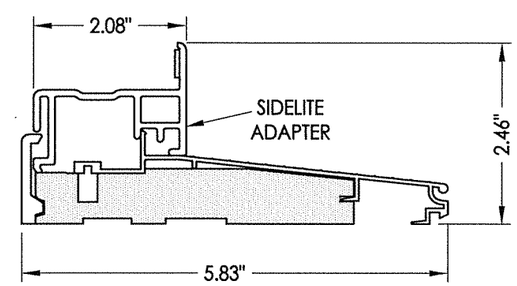

33 **INSWING THRESHOLD w/ SIDELITE ADAPTER**
Composite Sill

CONCRETE ANCHOR NOTES:

1. *Concrete anchor locations at the corners may be adjusted to maintain the min. edge distance to mortar joints.*
2. *Concrete anchor locations noted as "MAX. ON CENTER" must be adjusted to maintain the min. edge distance to mortar joints, additional concrete anchors may be required to ensure the "MAX. ON CENTER" dimension are not exceeded.*
3. *Concrete anchor table:*

ANCHOR TYPE	ANCHOR SIZE	MIN. EMBEDMENT	MIN. CLEARANCE TO MASONRY EDGE	MIN. CLEARANCE TO ADJACENT ANCHOR
ITW TAPCON®	1/4"	1-3/4"	2"	4"
DeWALT ULTRACON+®	1/4"	1-3/4"	1"	4"
ITW TAPCON®	3/16"	1-1/4"	3"	1-1/2"

WOOD SCREW INSTALLATION NOTES:

1. *Maintain a minimum 5/8" edge distance, 1" end distance, & 1" o.c. spacing of wood screws to prevent the splitting of wood.*

STATE OF TEXAS
LYNDON F. SCHMIDT
104123
LICENSED
PROFESSIONAL ENGINEER
3.1.21

Documents Prepared By: Lyndon F. Schmidt, P.E.
TEXAS P.E. #104123

RW BUILDING CONSULTANTS, INC.
P.O. Box 230 Valrico FL. 33595
Phone No.: 813.659.9197

TEXAS BOARD OF PROFESSIONAL ENGINEERS
CERTIFICATE OF REGISTRATION # F-11852

PRODUCT: THERMA-TRU FIBERGLASS DOOR

PART OR ASSEMBLY: BILL OF MATERIALS & COMPONENTS

NO.	DATE	REVISIONS	BY

DATE: 1/06/21
SCALE: N.T.S.
DWG. BY: RW
CHK. BY: LFS
DRAWING NO.: TX-5156
SHEET 9 OF 9

© 2021 R.W. BUILDING CONSULTANTS INC.

Z:\Clients\Therma Tru PERMANENT\B - Texas Dept of Ins\TDI - DR XXX - 6'8, 7' & 8' CC Opaque FG NonImp IS Dir Set Sidelites (TX 5152-5157)\C - Drawings\TX-5156-57.dwg