WINCORE™
WINDOWS & DOORS
250 Staunton Turnpike, Parkersburg, WV 26104

8800 Series
Vinyl Fixed Window
"IMPACT"

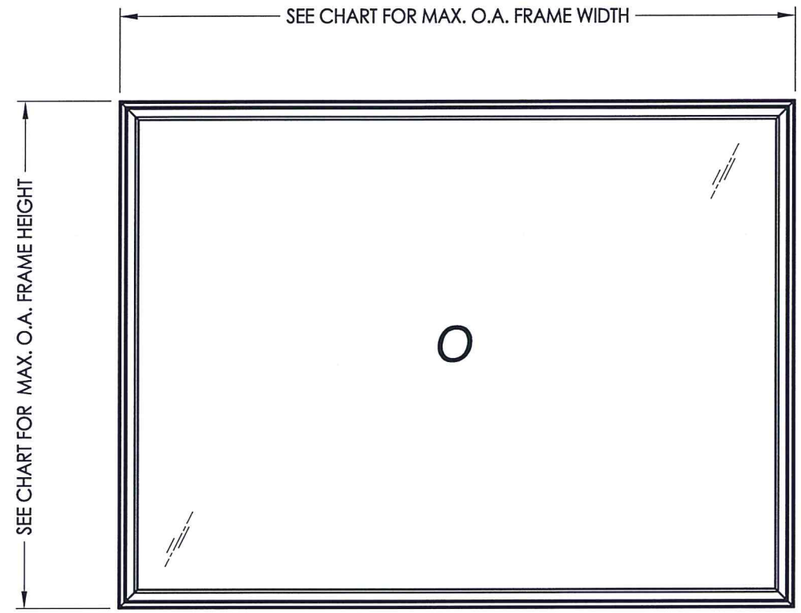

EVALUATED FOR USE IN THE STATE OF TEXAS

The Fixed Window described herein complies with the 2018 International Residential Code (IRC), Sections R301 & R609 and the 2018 International Building Code (IBC), Sections 1404.13, 1609, 1709.5, 2403 and 2404 subject to the following conditions:

1. Anchors shall be as listed and spaced as shown in the details. Anchor embedment to base material shall be beyond roof covering.
2. When used in areas requiring wind-borne debris protection, this product complies with Section R301.2.1.2 of the IRC and Section 1609.2 of the IBC and does not require impact protection. This product meets missile level "D" and includes Wind Zone 3 as defined in ASTM E 1996.
3. Allowable design pressure requirements must be equal to or less than the design pressure rating shown in the design pressure chart, sheet 1 of this drawing.
4. Conditions not covered by this drawing are subject to further engineering analysis.

TABLE OF CONTENTS

SHEET #	DESCRIPTION
1	Typical Elevations, Design Pressures & General Notes
2	Cross Section
3	Frame Anchoring
4	Bill of Materials, Glazing Details & Components

NOTE: HORIZONTAL OR VERTICAL ORIENTATION IS ALLOWED

MAX. FRAME DIMENSION	MAX. D.L.O. DIMENSION	GLASS TYPE	DESIGN PRESSURE (PSF)	
			POSITIVE	NEGATIVE
54.0" X 67.0"	48.75" X 61.75"	G1, G2	+50.0	-50.0
40.0" X 84.0"	34.75" X 78.75"	G1	+50.0	-50.0
54.0" X 84.0"	48.75" X 78.75"	G3	+50.0	-50.0
72.0" X 72.0"	66.75" X 66.75"	G3	+65.0	-65.0
76.0" X 63.0"	70.75" X 57.75"	G3	+65.0	-70.0
76.0" X 48.0"	70.75" X 42.75"	G2	+65.0	-70.0

STATE OF TEXAS
LYNDON F. SCHMIDT
104123
LICENSED PROFESSIONAL ENGINEER
7.30.20

Documents Prepared By: Lyndon F. Schmidt, P.E.
TEXAS P.E. #104123
RW BUILDING CONSULTANTS, INC.
P.O. Box 230 Valrico FL. 33595
Phone No.: 813.659.9197
TEXAS BOARD OF PROFESSIONAL ENGINEERS
CERTIFICATE OF REGISTRATION # F-11852

PRODUCT: FIXED WINDOW
PART OR ASSEMBLY: TYPICAL ELEVATION, DESIGN PRESSURES & GENERAL NOTES

NO.	DATE	REVISIONS	BY

DATE: 7/30/20
SCALE: N.T.S.
DWG. BY: RW
CHK. BY: LFS
DRAWING NO.: TX-5090
SHEET 1 OF 4

© 2020 R.W. BUILDING CONSULTANTS INC.

R:\Clients\Wincore PERMANENT\B - (2018) Texas Dept of Ins\TDI XXX 8800 Fixed Windows\C - Drawings\TX-5090.dwg, TX-5090

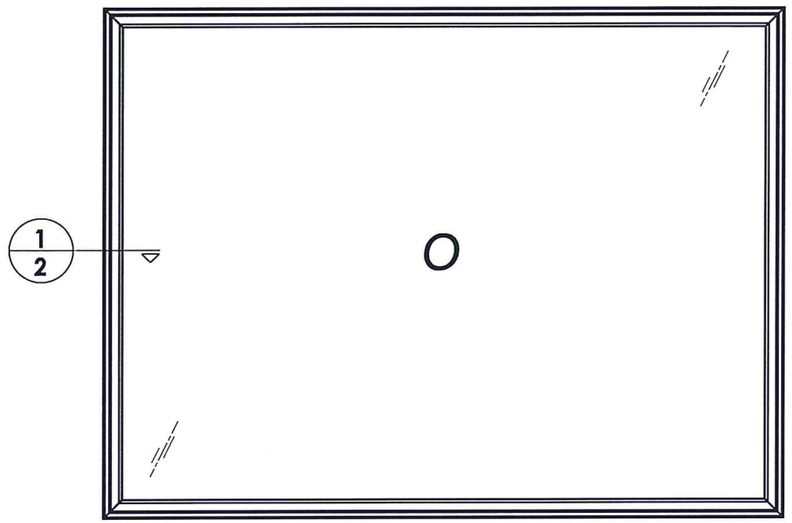

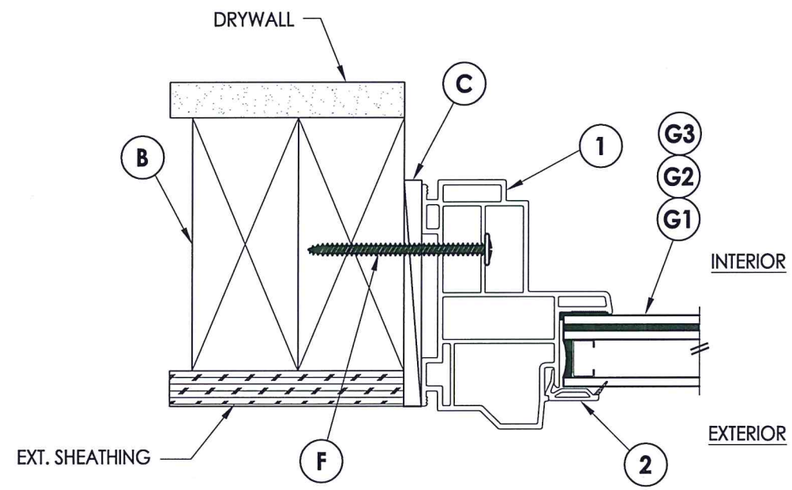

1/2 **HORIZONTAL CROSS SECTION**

STATE OF TEXAS
LYNDON F. SCHMIDT
104123
LICENSED PROFESSIONAL ENGINEER
7.30.20

Documents Prepared By: Lyndon F. Schmidt, P.E.
TEXAS P.E. #104123

RW BUILDING CONSULTANTS, INC.
P.O. Box 230 Valrico FL. 33595
Phone No.: 813.659.9197

TEXAS BOARD OF PROFESSIONAL ENGINEERS
CERTIFICATE OF REGISTRATION # F-11852

PRODUCT: FIXED WINDOW

PART OR ASSEMBLY: CROSS SECTION

NO.	DATE	REVISIONS	BY

DATE: 7/30/20
SCALE: N.T.S.
DWG. BY: RW
CHK. BY: LFS
DRAWING NO.: TX-5090
SHEET 2 OF 4

© 2020 R.W. BUILDING CONSULTANTS INC.

R:\Clients\Wincore PERMANENT\B - (2018) Texas Dept of Ins\TDI XXX 8800 Fixed Windows\C - Drawings\TX-5090.dwg, 1-2

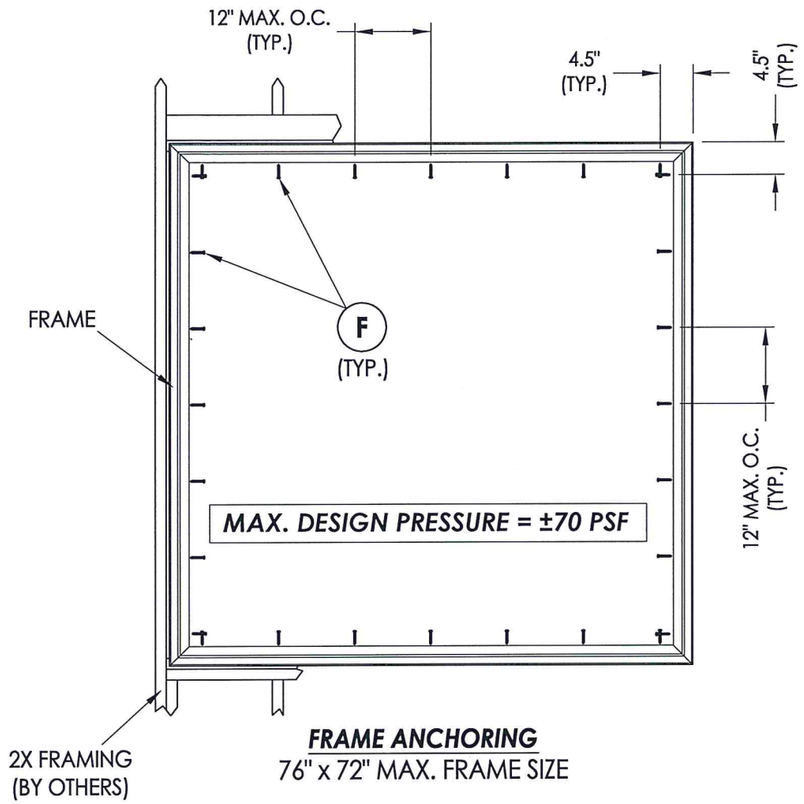

FRAME ANCHORING
76" x 72" MAX. FRAME SIZE

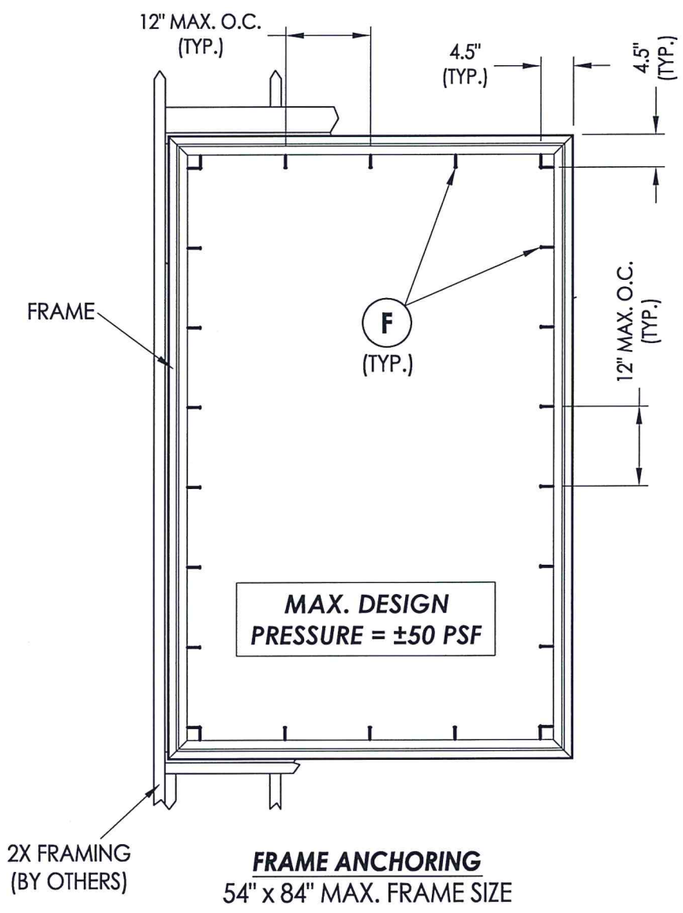

FRAME ANCHORING
54" x 84" MAX. FRAME SIZE

STATE OF TEXAS
LYNDON F. SCHMIDT
104123
LICENSED
PROFESSIONAL ENGINEER
7.30.20

Documents Prepared By: Lyndon F. Schmidt, P.E.
TEXAS P.E. #104123

RW BUILDING CONSULTANTS, INC.
P.O. Box 230 Valrico FL. 33595
Phone No.: 813.659.9197

TEXAS BOARD OF PROFESSIONAL ENGINEERS
CERTIFICATE OF REGISTRATION # F-11852

PRODUCT: FIXED WINDOW

PART OR ASSEMBLY: FRAME ANCHORING

NO.	DATE	BY

REVISIONS

DATE: 7/30/20
SCALE: N.T.S.
DWG. BY: RW
CHK. BY: LFS
DRAWING NO.: TX-5090
SHEET 3 OF 4

© 2020 R.W. BUILDING CONSULTANTS INC.

R:\Clients\Wincore PERMANENT\B - (2018) Texas Dept of Ins\TDI XXX 8800 Fixed Windows\C - Drawings\TX-5090.dwg, 1-3

BILL OF MATERIALS		
ITEM #	DESCRIPTION	MATERIAL
B	2X FRAMING (SG >= 0.42)	WOOD
C	1/4" MAX. SHIM SPACE	-
F	#10 X 2" MODIFIED TRUSS HEAD (7/16" Ø) SMS (1-5/16" MIN. EMBEDMENT)	STEEL
1	FRAME (PE7701B)*	PVC
2	1" GLAZING BEAD (BV79)*	PVC

* THE APPROVED WHITE RIGID PVC EXTERIOR EXTRUSIONS FOR WINDOWS ARE TO BE PRODUCED BY EXTRUDERS LICENSEES IN "AAMA CERTIFICATION PROGRAMS FOR RIGID PVC EXTRUSIONS".

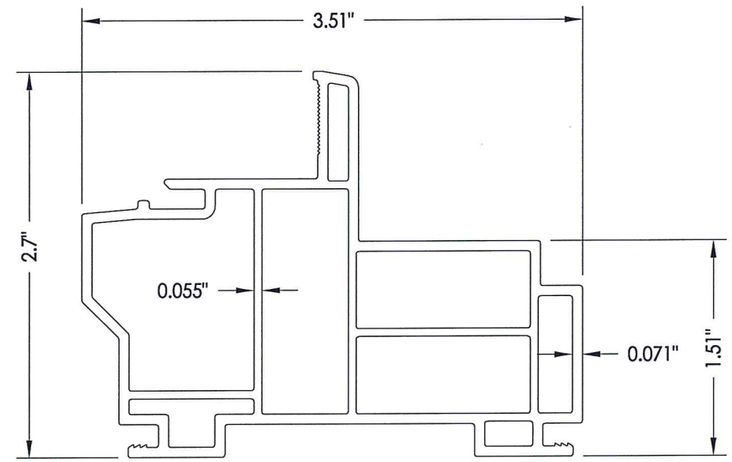

1 FRAME

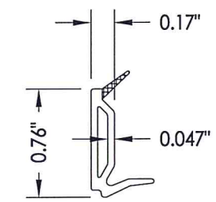

2 GLAZING BEAD

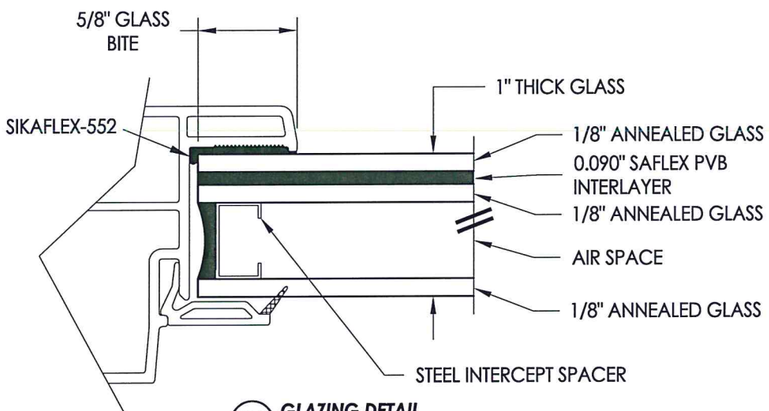

G1 GLAZING DETAIL

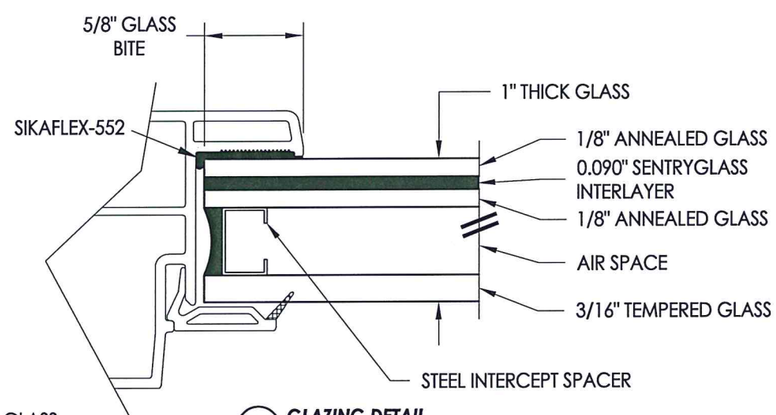

G3 GLAZING DETAIL

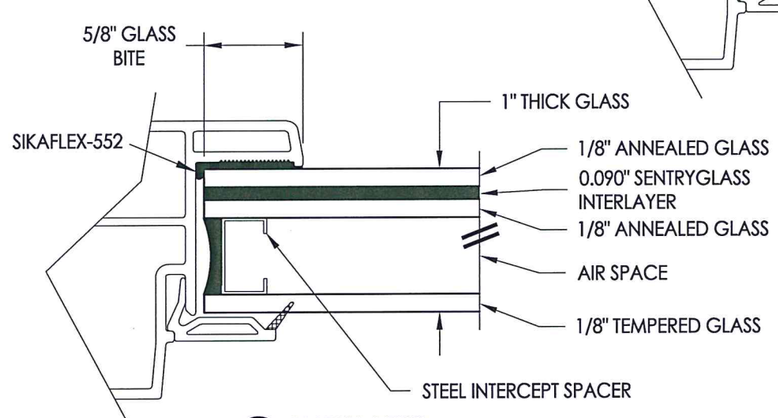

G2 GLAZING DETAIL

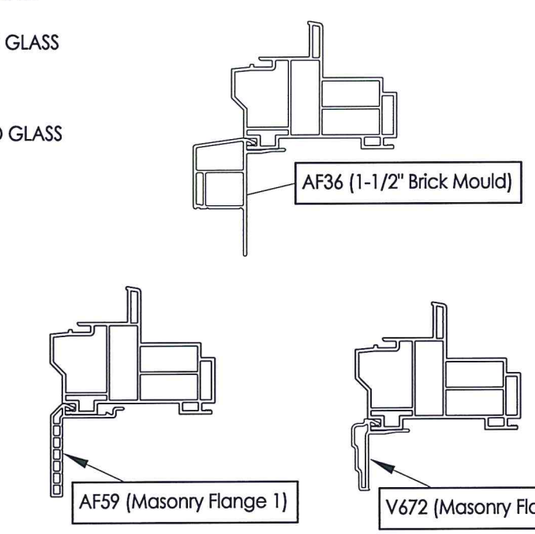

OPTIONAL COSMETIC FLANGES

STATE OF TEXAS
LYNDON F. SCHMIDT
104123
LICENSED PROFESSIONAL ENGINEER
7.30.20

Documents Prepared By: Lyndon F. Schmidt, P.E. TEXAS P.E. #104123
RW BUILDING CONSULTANTS, INC.
P.O. Box 230 Valrico FL. 33595
Phone No.: 813.659.9197
TEXAS BOARD OF PROFESSIONAL ENGINEERS CERTIFICATE OF REGISTRATION # F-11852

PRODUCT: FIXED WINDOW

PART OR ASSEMBLY: BILL OF MATERIALS, GLAZING DETAILS & COMPONENTS

NO.	DATE	REVISIONS	BY

DATE: 7/30/20
SCALE: N.T.S.
DWG. BY: RW
CHK. BY: LFS
DRAWING NO.: TX-5090
SHEET 4 OF 4

© 2020 R.W. BUILDING CONSULTANTS INC.

R:\Clients\Wincore PERMANENT\B - (2018) Texas Dept of Ins\TDI XXX 8800 Fixed Windows\C - Drawings\TX-5090.dwg, 1-4