SINGLE HUNG - NON-IMPACT

(SHOWN w/DIFFERENT OPTIONS)

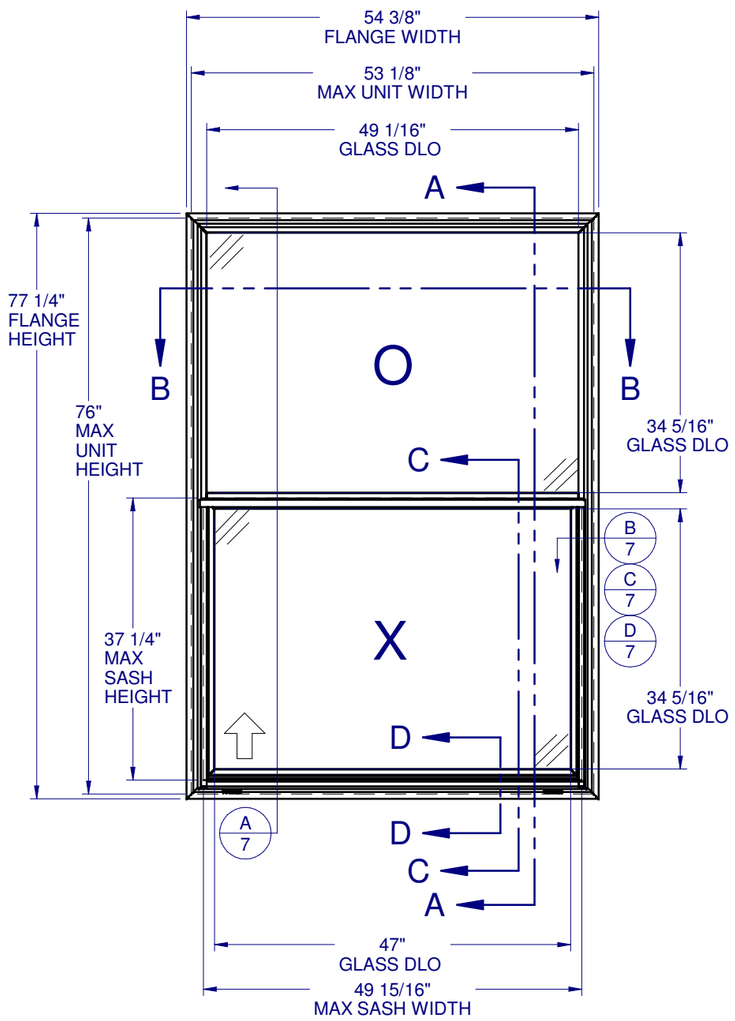

EQUAL SPLIT

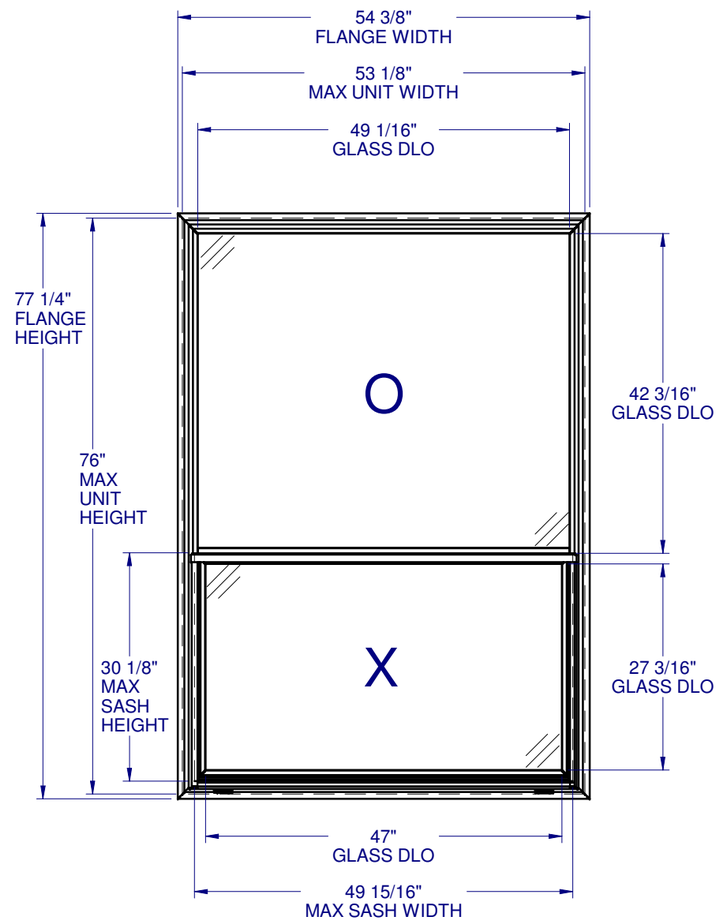

ORIEL

GENERAL NOTES:

1. THE PRODUCT SHOWN HEREIN IS DESIGNED AND MANUFACTURED TO COMPLY WITH THE REQUIREMENTS OF THE 2006 INTERNATIONAL BUILDING CODE (IBC) AND INTERNATIONAL RESIDENTIAL CODE (IRC), WITH 2006 TEXAS REVISIONS EFFECTIVE JANUARY 1, 2008.
2. GLAZING OPTIONS: (SEE SHEET 3)
3. CONFIGURATIONS: "O/X".
4. DESIGN PRESSURE RATING (SEE SHEET 2):
   -NEGATIVE DESIGN LOADS BASED ON, TESTED PRESSURE AND GLASS TABLES ASTM E-1300-04.
   -POSITIVE DESIGN LOADS BASED ON, TESTED PRESSURE, WATER INFILTRATION TEST PRESSURE AND GLASS TABLES ASTM E-1300-04.
5. ANCHORAGE: THE 33 1/3% STRESS INCREASE HAS NOT BEEN USED IN THE DESIGN OF THIS PRODUCT. SEE SHEET 7 FOR ANCHOR DETAILS. WINDLOAD DURATION FACTOR Cd=1.6 WAS USED FOR WOOD ANCHOR CALCULATIONS.
6. NOT APPROVED FOR IMPACT RESISTANCE. IMPACT PROTECTIVE SYSTEM IS REQUIRED IN WIND BORNE DEBRIS REGION.
7. ALL FRAMES AND VENTS FULLY WELDED. SMALL JOINT SEAM SEALANT USED AT FIXED MEETING RAIL AND JAMB.
8. SERIES / MODEL DESIGNATION SH-610.
9. THE DESIGNATION X AND O STAND FOR THE FOLLOWING: X = OPERABLE SASH, O = FIXED SASH
10. SECTION CALLOUTS APPLY TO ALL ELEVATIONS IN A SIMILAR LOCATION.
11. EXTERNAL WEEP SLOT = 1/4 x 1-1/2" LOCATED 5" FROM BOTH ENDS.

Lucas A. Turner
2016-02-23
09:29-05:00

TABLE OF CONTENTS

GENERAL NOTES & ELEVATIONS.....1
DP CHARTS.....2
GLAZING DETAILS.....3
SECTION VIEWS.....4
EXTRUSIONS & B.O.M.....5
ANCHOR SCHEDULE & NOTES.....6
INSTALLATION DETAIL.....7

CONFIG.	MAX. UNIT SIZE	EXTERNAL REINFORCEMENT	DESIGN PRESSURE RATING	IMPACT RATING
EQUAL	37" x 76"	NONE	SEE COMPARATIVE ANALYSIS CHART, SHEET 2	NONE
EQUAL	53-1/8" x 76"	* 2011		
5 HI ORIEL				

* ONLY REQUIRED WITH H-6137 FIXED MEETING RAIL & SCREW-ON INTERLOCK, S-2001 - SEE SHEET 4 FOR DETAILS.

Custom CW WINDOW SYSTEMS
1900 SW 44TH AVE.
OCALA, FLORIDA 34474
WWW.CWS.CC

610 PVC SINGLE HUNG NON-IMPACT

NO.:	DESCRIPTION:	BY:	DATE:

REVISIONS

STATE OF TEXAS
LUCAS A. TURNER
115094
LICENSED
PROFESSIONAL ENGINEER

2/23/2016

LUCAS A. TURNER, P.E.
TX PE # 115094
1239 JABARA AVE.
NORTH PORT, FL 34288
PH. 941-380-1574

SHEET DESCRIPTION:
GENERAL NOTES AND ELEVATIONS

DRAWN BY:	DATE:
EMK	12/17/15
DWG #: TDI-935	REV.: -
SCALE: 1:20	SHEET 1 OF 7

Design Pressures (PSF) for Equal Split Configuration with Glass Types A, B, C, or D											
Unit	Unit Widths (in.)										
Heights (in.)	23 1/2	27 1/2	29 1/2	31 1/2	35 1/2	39 1/2	41 1/2	43 1/2	47 1/2	51 1/2	53 1/8
35 1/2	+50.0/-75.0	+50.0/-75.0	+50.0/-75.0	+50.0/-75.0	+50.0/-75.0	+50.0/-75.0	+50.0/-75.0	+50.0/-75.0	+50.0/-75.0	+50.0/-75.0	+50.0/-75.0
39 1/2	+50.0/-75.0	+50.0/-75.0	+50.0/-75.0	+50.0/-75.0	+50.0/-75.0	+50.0/-75.0	+50.0/-75.0	+50.0/-75.0	+50.0/-75.0	+50.0/-75.0	+50.0/-75.0
41 1/2	+50.0/-75.0	+50.0/-75.0	+50.0/-75.0	+50.0/-75.0	+50.0/-75.0	+50.0/-75.0	+50.0/-75.0	+50.0/-75.0	+50.0/-75.0	+50.0/-75.0	+50.0/-73.1
43 1/2	+50.0/-75.0	+50.0/-75.0	+50.0/-75.0	+50.0/-75.0	+50.0/-75.0	+50.0/-75.0	+50.0/-75.0	+50.0/-75.0	+50.0/-75.0	+50.0/-73.4	+50.0/-70.6
47 1/2	+50.0/-75.0	+50.0/-75.0	+50.0/-75.0	+50.0/-75.0	+50.0/-75.0	+50.0/-75.0	+50.0/-75.0	+50.0/-75.0	+50.0/-75.0	+50.0/-68.9	+50.0/-66.2
51 1/2	+50.0/-75.0	+50.0/-75.0	+50.0/-75.0	+50.0/-75.0	+50.0/-75.0	+50.0/-75.0	+50.0/-75.0	+50.0/-75.0	+50.0/-72.7	+50.0/-65.2	+50.0/-62.6
53 1/2	+50.0/-75.0	+50.0/-75.0	+50.0/-75.0	+50.0/-75.0	+50.0/-75.0	+50.0/-75.0	+50.0/-75.0	+50.0/-75.0	+50.0/-71.0	+50.0/-63.6	+50.0/-61.0
55 1/2	+50.0/-75.0	+50.0/-75.0	+50.0/-75.0	+50.0/-75.0	+50.0/-75.0	+50.0/-75.0	+50.0/-75.0	+50.0/-75.0	+50.0/-69.5	+50.0/-62.1	+50.0/-59.5
59 1/2	+50.0/-75.0	+50.0/-75.0	+50.0/-75.0	+50.0/-75.0	+50.0/-75.0	+50.0/-75.0	+50.0/-75.0	+50.0/-75.0	+50.0/-66.8	+50.0/-59.5	+50.0/-57.0
63 1/2	+50.0/-75.0	+50.0/-72.9	+50.0/-72.0	+50.0/-71.6	+50.0/-71.6	+50.0/-71.6	+50.0/-71.6	+50.0/-71.6	+50.0/-64.6	+50.0/-57.3	+50.0/-54.8
65 1/2	+50.0/-73.2	+50.0/-69.1	+50.0/-68.0	+50.0/-67.4	+50.0/-67.3	+50.0/-67.3	+50.0/-67.3	+50.0/-67.3	+50.0/-63.6	+50.0/-56.4	+50.0/-53.9
67 1/2	+50.0/-69.8	+50.0/-65.6	+50.0/-64.4	+50.0/-63.7	+50.0/-63.4	+50.0/-63.4	+50.0/-63.4	+50.0/-63.4	+50.0/-62.7	+50.0/-55.5	+50.0/-53.0
71 1/2	+50.0/-64.0	+50.0/-59.7	+50.0/-58.3	+50.0/-57.3	+50.0/-56.5	+50.0/-56.5	+50.0/-56.5	+50.0/-56.5	+50.0/-56.5	+50.0/-53.9	+50.0/-51.5
74 3/4	+50.0/-59.9	+50.0/-55.6	+50.0/-54.1	+50.0/-53.0	+50.0/-51.8	+50.0/-51.7	+50.0/-51.7	+50.0/-51.7	+50.0/-51.7	+50.0/-51.7	+50.0/-50.4
76	+50.0/-58.5	+50.0/-54.1	+50.0/-52.6	+50.0/-51.5	+50.0/-50.2	+50.0/-50.0	+50.0/-50.0	+50.0/-50.0	+50.0/-50.0	+50.0/-50.0	+50.0/-50.0

Design Pressures (PSF) for Oriel Configuration with Glass Types A, B, C, or D in the Sash, and Glass Types C or D in the Fixed											
Unit	Unit Widths (in.)										
Heights (in.)	23 1/2	27 1/2	29 1/2	31 1/2	35 1/2	39 1/2	41 1/2	43 1/2	47 1/2	51 1/2	53 1/8
35 1/2	+50.0/-75.0	+50.0/-75.0	+50.0/-75.0	+50.0/-75.0	+50.0/-75.0	+50.0/-75.0	+50.0/-75.0	+50.0/-75.0	+50.0/-75.0	+50.0/-75.0	+50.0/-75.0
39 1/2	+50.0/-75.0	+50.0/-75.0	+50.0/-75.0	+50.0/-75.0	+50.0/-75.0	+50.0/-75.0	+50.0/-75.0	+50.0/-75.0	+50.0/-75.0	+50.0/-75.0	+50.0/-74.1
41 1/2	+50.0/-75.0	+50.0/-75.0	+50.0/-75.0	+50.0/-75.0	+50.0/-75.0	+50.0/-75.0	+50.0/-75.0	+50.0/-75.0	+50.0/-75.0	+50.0/-74.2	+50.0/-71.3
43 1/2	+50.0/-75.0	+50.0/-75.0	+50.0/-75.0	+50.0/-75.0	+50.0/-75.0	+50.0/-75.0	+50.0/-75.0	+50.0/-75.0	+50.0/-75.0	+50.0/-71.6	+50.0/-68.9
47 1/2	+50.0/-75.0	+50.0/-75.0	+50.0/-75.0	+50.0/-75.0	+50.0/-75.0	+50.0/-75.0	+50.0/-75.0	+50.0/-75.0	+50.0/-74.8	+50.0/-67.2	+50.0/-64.6
51 1/2	+50.0/-69.0	+50.0/-68.4	+50.0/-68.4	+50.0/-68.4	+50.0/-68.1	+50.0/-67.4	+50.0/-67.4	+50.0/-67.4	+50.0/-67.4	+50.0/-63.6	+50.0/-61.1
53 1/2	+50.0/-64.4	+50.0/-63.4	+50.0/-63.4	+50.0/-63.4	+50.0/-62.4	+50.0/-61.2	+50.0/-61.1	+50.0/-61.1	+50.0/-61.1	+50.0/-61.1	+50.0/-59.5
55 1/2	+50.0/-60.3	+50.0/-58.9	+50.0/-58.9	+50.0/-58.9	+50.0/-57.6	+50.0/-56.1	+50.0/-55.7	+50.0/-55.6	+50.0/-55.6	+50.0/-55.6	+50.0/-55.6
59 1/2	+50.0/-53.6	+50.0/-51.6	+50.0/-51.3	+50.0/-51.3	+50.0/-51.3	+50.0/-51.0	+50.0/-50.5	+50.0/-50.1	+50.0/-50.0	+50.0/-50.0	+50.0/-50.0
63 1/2	+50.0/-52.5	+50.0/-50.4	+50.0/-50.0	+50.0/-50.0	+50.0/-50.0	+50.0/-50.0	+50.0/-50.0	+50.0/-50.0	+50.0/-50.0	+50.0/-50.0	+50.0/-50.0
65 1/2	+50.0/-52.5	+50.0/-50.4	+50.0/-50.0	+50.0/-50.0	+50.0/-50.0	+50.0/-50.0	+50.0/-50.0	+50.0/-50.0	+50.0/-50.0	+50.0/-50.0	+50.0/-50.0
67 1/2	+50.0/-52.5	+50.0/-50.4	+50.0/-50.0	+50.0/-50.0	+50.0/-50.0	+50.0/-50.0	+50.0/-50.0	+50.0/-50.0	+50.0/-50.0	+50.0/-50.0	+50.0/-50.0
71 1/2	+50.0/-52.5	+50.0/-50.4	+50.0/-50.0	+50.0/-50.0	+50.0/-50.0	+50.0/-50.0	+50.0/-50.0	+50.0/-50.0	+50.0/-50.0	+50.0/-50.0	+50.0/-50.0
74 3/4	+50.0/-52.5	+50.0/-50.4	+50.0/-50.0	+50.0/-50.0	+50.0/-50.0	+50.0/-50.0	+50.0/-50.0	+50.0/-50.0	+50.0/-50.0	+50.0/-50.0	+50.0/-50.0
76	+50.0/-52.5	+50.0/-50.4	+50.0/-50.0	+50.0/-50.0	+50.0/-50.0	+50.0/-50.0	+50.0/-50.0	+50.0/-50.0	+50.0/-50.0	+50.0/-50.0	+50.0/-50.0

NOTE:

IF SIZE INTENDED IS NOT SHOWN, USE NEXT LARGER SIZE.

Custom CWS WINDOW SYSTEMS
1900 SW 44TH AVE.
OCALA, FLORIDA 34474
WWW.CWS.CC

610 PVC SINGLE HUNG NON-IMPACT

REVISIONS

NO.:	DESCRIPTION:	BY:	DATE:

STATE OF TEXAS
LUCAS A. TURNER
115094
LICENSED
PROFESSIONAL ENGINEER

2/23/2016

LUCAS A. TURNER, P.E.
TX PE # 115094
1239 JABARA AVE.
NORTH PORT, FL 34288
PH. 941-380-1574

SHEET DESCRIPTION:
DESIGN PRESSURE CHARTS

DRAWN BY:	DATE:
EMK	12/17/15
DWG #: TDI-935	REV.: -
SCALE: 1:1	SHEET 2 OF 7

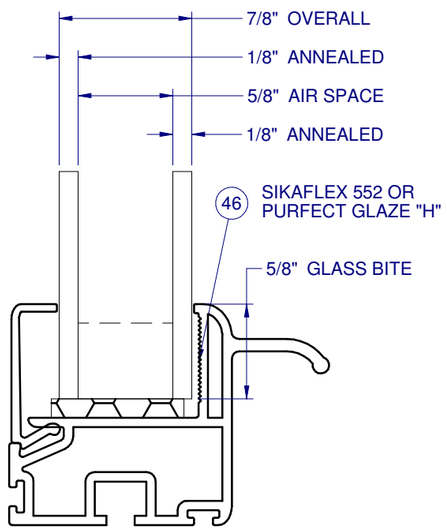

GLASS TYPE A

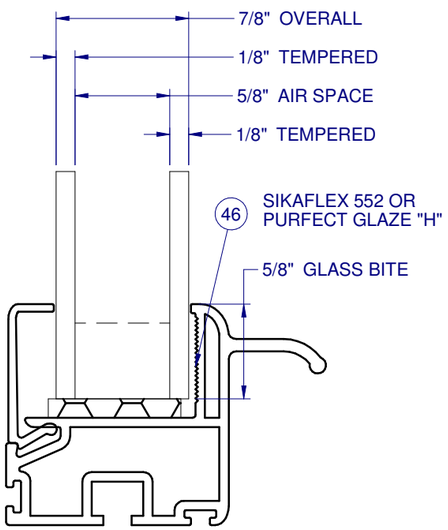

GLASS TYPE B

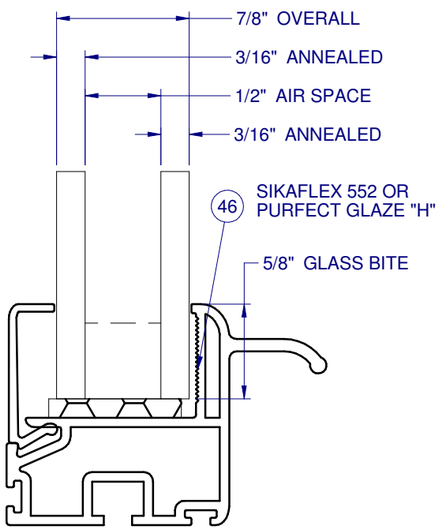

GLASS TYPE C

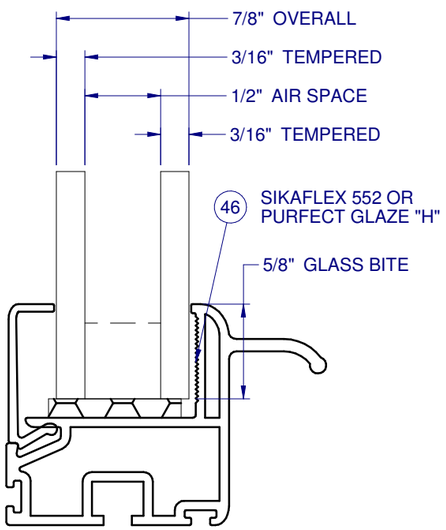

GLASS TYPE D

Custom C
WINDOW SYSTEMS
1900 SW 44TH AVE.
OCALA, FLORIDA 34474
WWW.CWS.CC

610 PVC SINGLE HUNG NON-IMPACT

NO.:	DESCRIPTION:	BY:	DATE:

REVISIONS

STATE OF TEXAS
LUCAS A. TURNER
115094
LICENSED
PROFESSIONAL ENGINEER

2/23/2016

LUCAS A. TURNER, P.E.
TX PE # 115094
1239 JABARA AVE.
NORTH PORT, FL 34288
PH. 941-380-1574

SHEET DESCRIPTION:
GLAZING DETAILS

DRAWN BY:	DATE:
EMK	12/17/15
DWG #: TDI-935	REV.: -
SCALE: 1:1	SHEET 3 OF 7

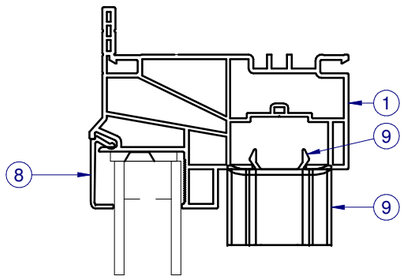

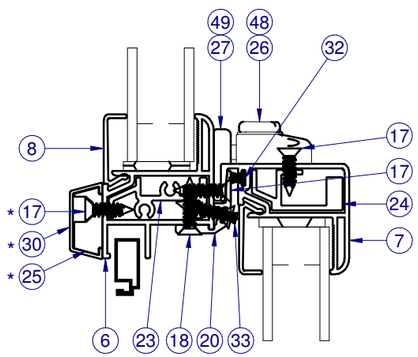

INTERIOR

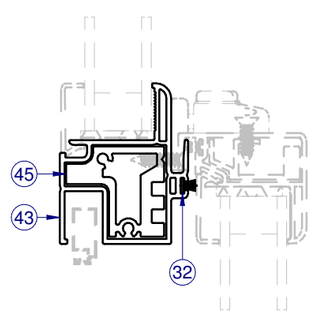

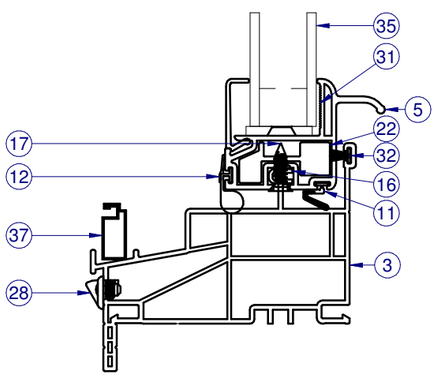

SECTION A-A

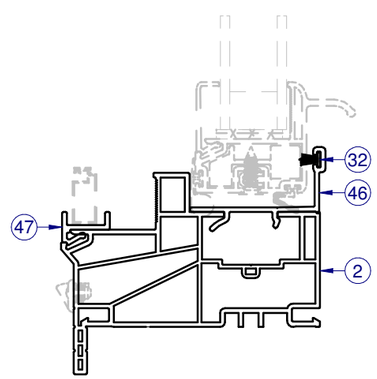

SECTION C-C
ALTERNATE HD MEETING RAIL
AND UNI-FRAME

INTERIOR

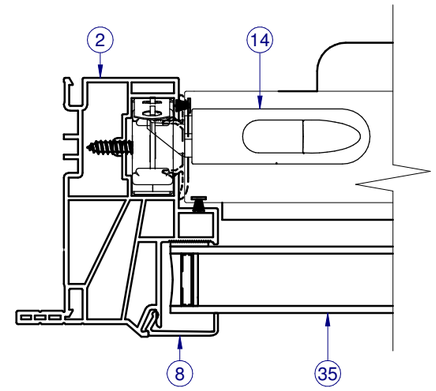

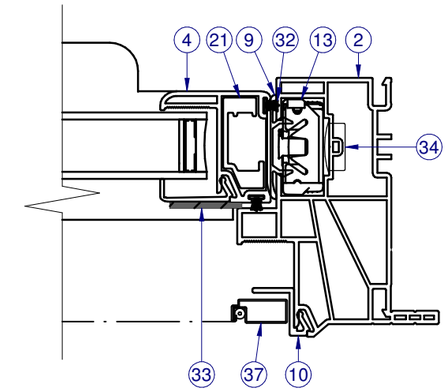

SECTION B-B

NOTE: LEFT SIDE SHOWS FIXED SECTION VIEW,
RIGHT SIDE SHOWS SASH SECTION VIEW.

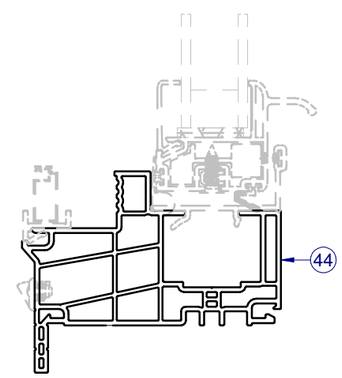

SECTION D-D
DEEP POCKET UNI-FRAME

NOTES:
- FIN FRAME AVAILABLE FOR BOTH UNI-FRAME AND STANDARD FRAME TYPES.
- 880 BALANCERS AND DEEP POCKET UNI-FRAME (H-6193) REQUIRED FOR LARGER SASHES. (NOT SHOWN IN SECTION B-B)
* EXTERNAL REINFORCEMENT REQUIRED ON UNIT WIDTHS OVER 37" WITH THE H-6137 FIXED MEETING RAIL AND SCREW-ON INTERLOCK, S-2001.

NOTE: ITEMS NOT SHOWN FOR CLARITY: 38-41

Custom C WINDOW SYSTEMS
1900 SW 44TH AVE.
OCALA, FLORIDA 34474
WWW.CWS.CC

610 PVC SINGLE HUNG NON-IMPACT

NO.:	DESCRIPTION:	BY:	DATE:

REVISIONS

STATE OF TEXAS
LUCAS A. TURNER
115094
LICENSED
PROFESSIONAL ENGINEER

2/23/2016

LUCAS A. TURNER, P.E.
TX PE # 115094
1239 JABARA AVE.
NORTH PORT, FL 34288
PH. 941-380-1574

SHEET DESCRIPTION:
SECTION VIEWS

DRAWN BY:	DATE:
EMK	12/17/15
DWG #: TDI-935	REV.: -
SCALE: 1:2	SHEET 4 OF 7

ITEM	PART	DESCRIPTION	MATERIAL	VENDOR
1	H-6125	HEAD, OUTERFRAME	PVC	ATN
2	H-6125	JAMBS, OUTERFRAME	PVC	ATN
3	H-6126	SILL, OUTERFRAME	PVC	ATN
4	H-6132	SASH SIDE RAIL	PVC	ATN
5	H-6136	SASH BOTTOM RAIL	PVC	ATN
6	H-6137	FIXED MEETING RAIL.	PVC	ATN
7	H-6138	SASH TOP RAIL	PVC	ATN
8	S-6141	GLAZING BEAD	PVC	ATN
9	S-6142	SASH STOP	PVC	ATN
10	S-6143	SCREEN ADAPTOR	PVC	ATN
11	P-5085	WSTP, QLON BULB VINYL		AMESBURY
12	P-5086	WSTP, QLON BULB VINYL		AMESBURY
13		BALANCERS - CONSTANT FORCE RT 562		CALDWELL
14	P-5392	SASH TILT LATCH	NYLON	CALDWELL
15	P-5393	PIVOT CARRIER	NYLON	CALDWELL
16	P-5396	PIVOT BAR	SS	CALDWELL
17	P-3515	#8 x 5/8 PHIL FLAT WHITE SMS	STEEL	FASTENAL
18	P-4146	#8 X 3/4 PHIL FLAT tek	STEEL	FASTENAL
19	P-3028	SETTING BLOCK	RUBBER	FRANK LOWE
20	S-2001	INTERLOCK RAIL	ALUM	ASCEND
21	S-2006	REINF, SASH SIDE RAIL, HD	ALUM	ASCEND
22	S-2007	REINF, BOTTOM RAIL	ALUM	ASCEND
23	S-2008	REINF, FMR	ALUM	ASCEND
24	S-2009	REINF, TOP RAIL	ALUM	ASCEND
25	S-2011	REINF, EXTERNAL	ALUM	ASCEND
26	P-5388	LOCKS	NYLON	LAWRENCE
27	P-5389	KEEPERS	NYLON	LAWRENCE
28	P-4779	WEEP COVER	NYLON	M&M
29	P-5397	FMR ENDCAP	NYLON	M&M
30	P-5400	COVER, FMR REINF.	PVC	TEAM PLASTICS
31		HOTMELT	SILICONE	TRUSEAL
32	P-3305	WSTP., .270 X 187, SOFT TOUCH FIN		ULTRAFAB
33	P-5425	WSTP, .200 X 5/8" X 5/8" DUST PLUG		ULTRAFAB
34	P-5390	HOLE PLUG	NYLON	
35	GLASS	SEE SHEET 2		
36	P-4638	#8 X 2-1/2 PHIL TRUSS tek	STEEL	FASTENAL
37	P-3218	SCREEN FRAME	ALUM	FLA SCREEN
38	P-4754	SCREEN CORNER KEY	NYLON	FLA SCREEN
39	P-3228	SCREEN SPLINE		DAPA
40	P-3029	SCREEN LIFTS		SUMMIT
41	P-3033	SCREEN SPRINGS		FLA SCREEN
42		BALANCERS - CONSTANT FORCE RT 880		
43	H-6157	HD FIXED MEETING RAIL	PVC	VISION
44	H-6193	UNI-FRAME, 880 BALANCERS	PVC	VISION
45	H-2115	REINF, HD FMR	ALUM	KEYMARK
46	S-6216	UNI-FRAME SILL POCKET INSERT	PVC	VISION
47	S-6217	UNI-FRAME SCREEN RETAINER	PVC	VISION
48	P-3783	LOCKS, IMPACT	STEEL	INTERLOCK
49	P-3784	KEEPERS, IMPACT	STEEL	INTERLOCK

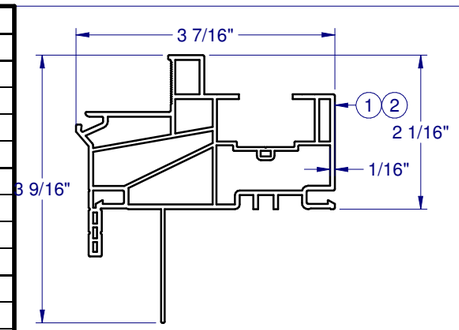

PVC FRAME HEAD & JAMB
H-6125

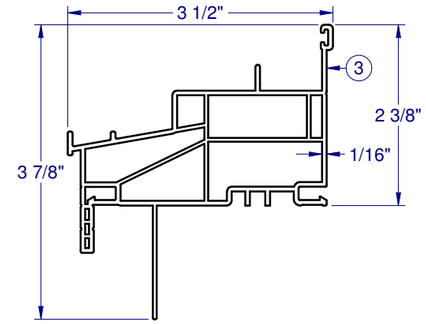

PVC FRAME SILL
H-6126

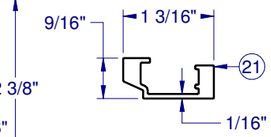

REINF. SSR HD
S-2006

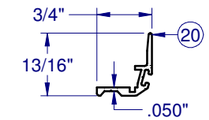

INTERLOCK
S-2001

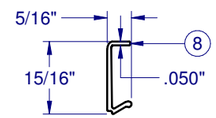

PVC GLAZING BEAD
S-6141

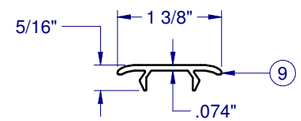

PVC SASH STOP
S-6138

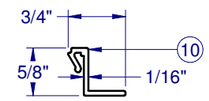

PVC SCREEN ADAPTOR
S-6143

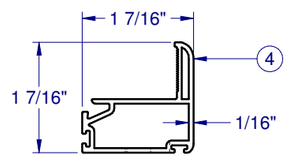

PVC SIDE RAIL
H-6132

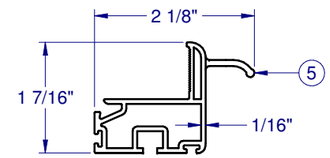

PVC SASH BTM RAIL
H-6136

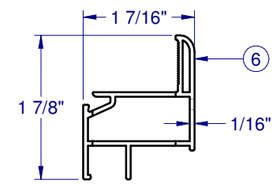

PVC SASH FMR
H-6137

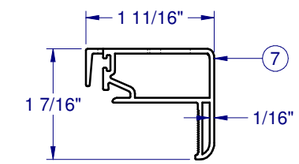

PVC SASH TOP RAIL
H-6138

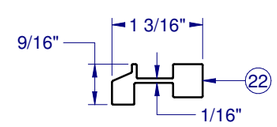

REINF. BTM RAIL
S-2007

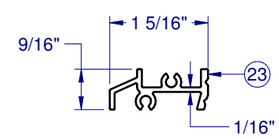

REINF. FMR
S-2008

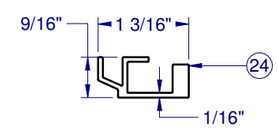

REINF. TOP RAIL
S-2009

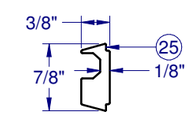

REINF. EXTERNAL
S-2011

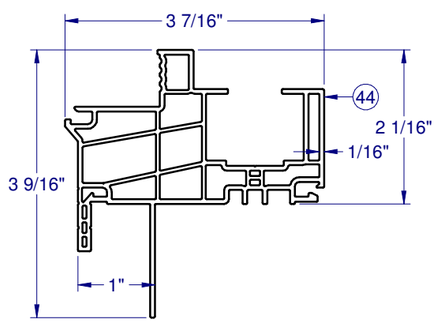

PVC FRAME
H-6193

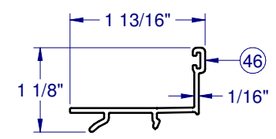

PVC SILL POCKET INSERT
S-6216

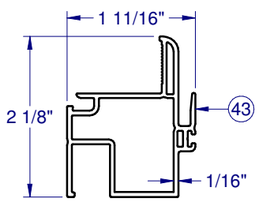

PVC HD FMR
H-6157

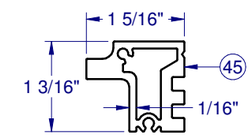

REINF. HD FMR
H-2115
6005A-T5

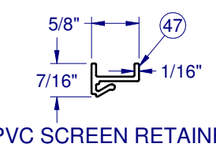

PVC SCREEN RETAINER
S-6217

NOTE: ALL EXTRUSIONS ARE ALUM. 6063-T6 UNLESS OTHERWISE NOTED.

FRAME CORNER CONSTRUCTION

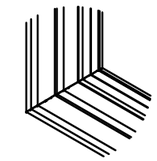
CORNER WELD (ALL SIDES)
1:8

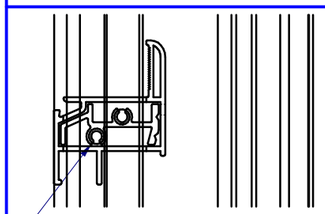
FIXED MEETING RAIL
SCREWED TOGETHER WITH
OUTERFRAME
1:8

Custom C WINDOW SYSTEMS
1900 SW 44TH AVE.
OCALA, FLORIDA 34474
WWW.CWS.CC

610 PVC SINGLE HUNG NON-IMPACT

NO.:	DESCRIPTION:	BY:	DATE:

REVISIONS

STATE OF TEXAS
LUCAS A. TURNER
115094
LICENSED
PROFESSIONAL ENGINEER

2/23/2016

LUCAS A. TURNER, P.E.
TX PE # 115094
1239 JABARA AVE.
NORTH PORT, FL 34288
PH. 941-380-1574

SHEET DESCRIPTION:
BOM AND EXTRUSIONS

DRAWN BY:	DATE:
EMK	12/17/15
DWG #: TDI-935	REV.: -
SCALE: 1:2	SHEET 5 OF 7

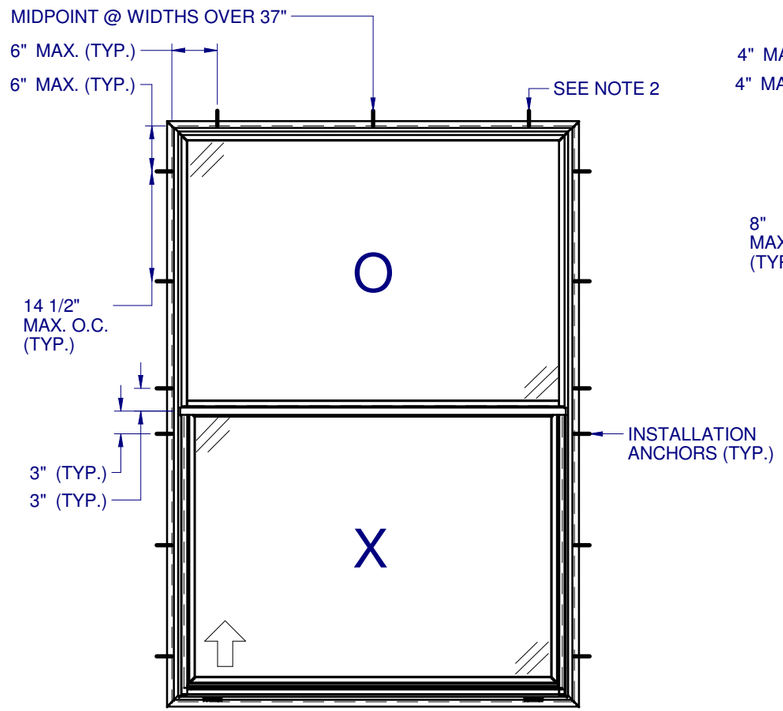

ANCHOR LAYOUT - (FLANGE)
[NO SILL ANCHORS REQUIRED]

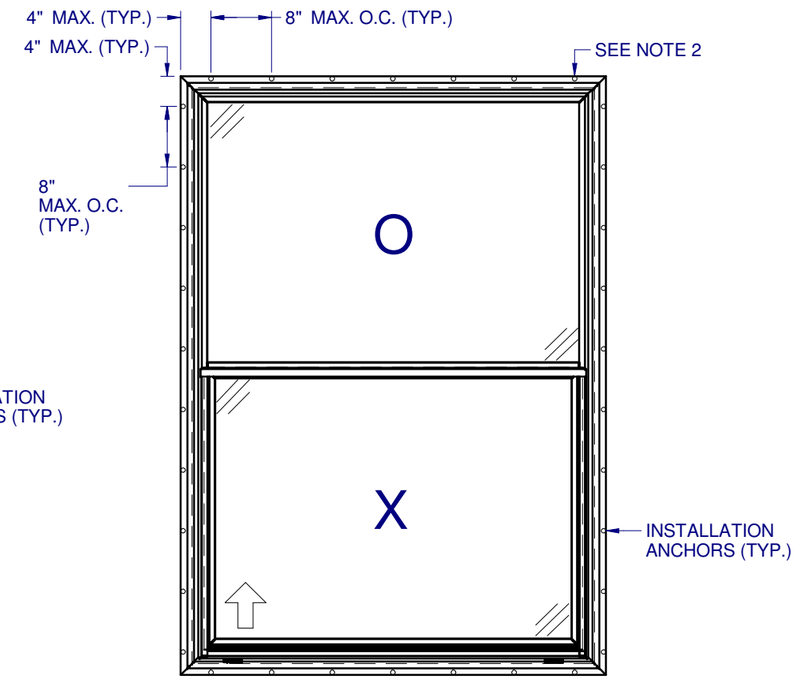

ANCHOR LAYOUT - (FIN)

NOTES:

1. INSTALL ONE ANCHOR AT EACH INSTALLATION LOCATION. SILL ANCHOR SPACING SAME AS HEAD.

2. SHIM AS REQ AT EACH INSTALLATION ANCHOR USING LOAD BEARING SHIMS. MAX. ALLOWABLE SHIM STACK TO BE 1/4". USE SHIMS WHERE SPACE GREATER THAN 1/16" IS PRESENT. LOAD BEARING SHIMS SHALL BE CONSTRUCTED OF HIGH DENSITY PLASTIC OR BETTER. WOOD SHIMS ARE NOT ALLOWED.

3. ANCHOR TYPE, SIZE, SPACING AND EMBEDMENT SHALL BE AS SPECIFIED IN THESE DRAWINGS, SEE TABLE 1, SHEET 7.

4. ALL INSTALLATION ANCHORS MUST BE MADE OF OR PROTECTED WITH A CORROSION RESISTANT MATERIAL OR COATING. DISSIMILAR METALS OR MATERIALS IN CONTACT WITH PRESSURE TREATED WOOD MUST BE PROTECTED TO PREVENT REACTION.

5. INSTALLATION ANCHORS SHALL BE IN ACCORDANCE WITH ANCHOR MANUFACTURER'S INSTALLATION INSTRUCTIONS, AND ANCHORS SHALL NOT BE USED IN SUBSTRATES WITH STRENGTHS LESS THAN THE MINIMUM SPECIFIED IN TABLE 1, SHEET 7.

6. ANCHOR EMBEDMENT TO SUBSTRATE SHALL BE BEYOND WALL DRESSING OR STUCCO. FOR CONCRETE/CMU OPENINGS, EMBEDMENT SHALL BE BEYOND WOOD BUCKS, IF USED, INTO SUBSTRATE - 1X BUCKS ARE OPTIONAL.

7. A MINIMUM CENTER-TO-CENTER SPACING SHALL BE MAINTAINED BETWEEN ALL FASTENERS: 3" FOR MASONRY, 1" FOR WOOD AND METAL.

8. WOOD OR MASONRY OPENINGS, BUCKS AND BUCK FASTENERS SHALL BE PROPERLY DESIGNED BY THE ARCHITECT OR ENGINEER OF RECORD AND INSTALLED TO TRANSFER WIND LOADS TO THE STRUCTURE. SUBSTRATES SHALL MEET THE MINIMUM STRENGTH REQUIREMENTS AS SHOWN IN TABLE1, SHEET 7. CONCRETE AND MASONRY SUBSTRATES MAY NOT BE CRACKED.

9. SEALING AND FLASHING STRATEGIES FOR OVERALL WATER RESISTANCE OF INSTALLATION SHALL BE DONE BY OTHERS FOLLOWING THE CURRENT VERSION OF THE REFERENCE DOCUMENTS: FMA/AAMA 100(FIN WINDOWS), FMA/AAMA 200(FLANGE WINDOWS), FMA/WDMA 250(BOX WINDOWS), FMA/AAMA/WDMA 300(EXTERIOR DOORS)

Custom CWS
WINDOW SYSTEMS
1900 SW 44TH AVE.
OCALA, FLORIDA 34474
WWW.CWS.CC

610 PVC SINGLE HUNG NON-IMPACT

NO.:	DESCRIPTION:	BY:	DATE:

REVISIONS

STATE OF TEXAS
LUCAS A. TURNER
115094
LICENSED
PROFESSIONAL ENGINEER

2/23/2016

LUCAS A. TURNER, P.E.
TX PE # 115094
1239 JABARA AVE.
NORTH PORT, FL 34288
PH. 941-380-1574

SHEET DESCRIPTION:
ANCHOR SCHEDULE AND NOTES

DRAWN BY:	DATE:
EMK	12/17/15
DWG #: TDI-935	REV.: -
SCALE: 1:20	SHEET 6 OF 7

TYPICAL HEAD ANCHORAGE

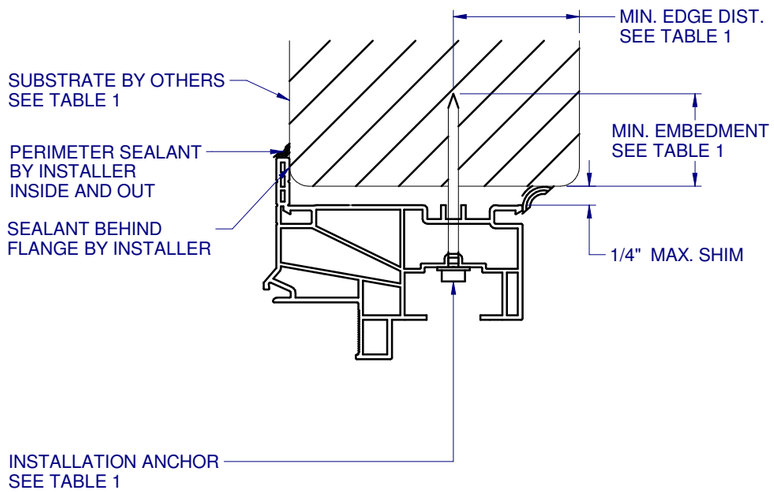

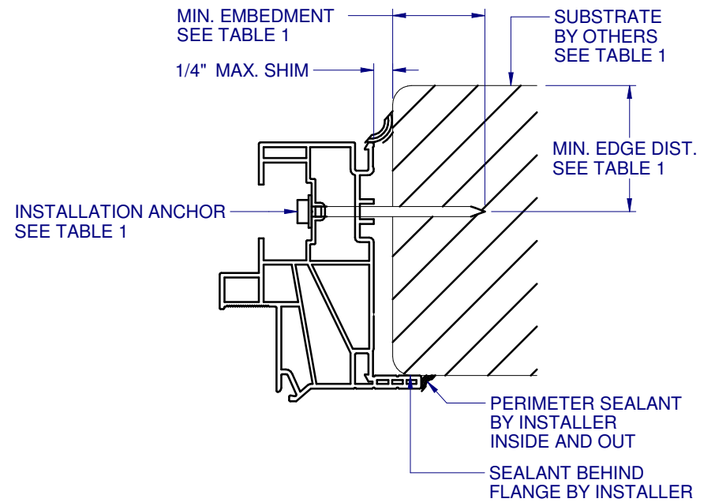

B / 7 HORIZONTAL SECTION
TYPICAL JAMB ANCHORAGE

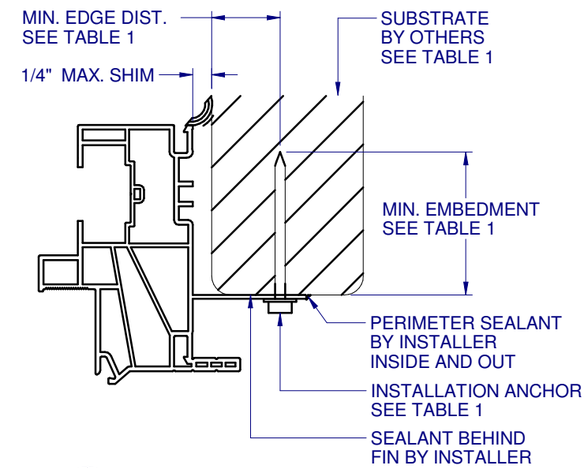

C / 7 HORIZONTAL SECTION
TYPICAL FIN ANCHORAGE
HEAD AND SILL SIMILAR FOR FIN INSTALLATION

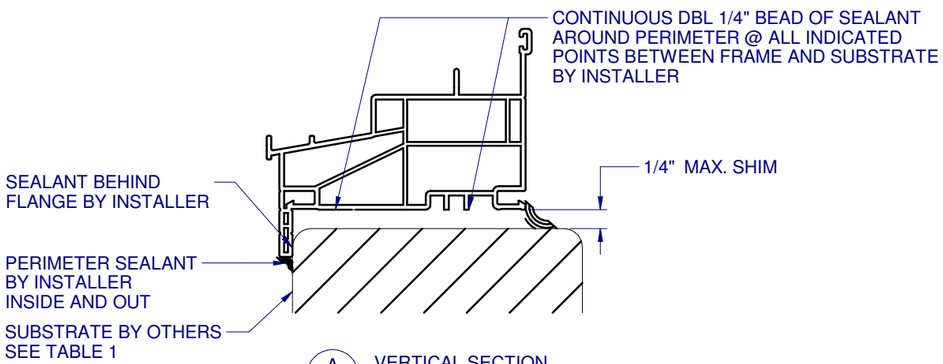

A / 7 VERTICAL SECTION
TYPICAL SILL ANCHORAGE
NO SILL ANCHORS REQUIRED

TABLE 1: APPROVED INSTALLATION FASTENERS

FRAME TYPE	SUBSTRATE TYPE	ANCHOR TYPE	MIN. EMBEDMENT	MIN. EDGE DIST.
FLANGE	CONCRETE (2.0 KSI MIN.)	3/16" ITW TAPCON	1"	1-1/8"
FLANGE	HOLLOW OR GROUT-FILLED CMU (117 PCF MIN.)	3/16" ITW TAPCON	1"	2"
FLANGE	CONCRETE (2.85 KSI MIN.)	3/16" ELCO ULTRACON	1"	1"
FLANGE	GROUT-FILLED CMU (ASTM C-90)	3/16" ELCO ULTRACON	1-1/4"	2-1/2"
FLANGE	2X MIN. SOUTHERN PINE (G=0.55)	3/16" ITW TAPCON OR ELCO ULTRACON	1-3/8"	7/8"
FLANGE	2X MIN. SOUTHERN PINE (G=0.55)	#10 WOOD SCREW	1-3/8"	7/8"
FLANGE	16 GAUGE (0.060") MIN. STEEL STUD (33 KSI YIELD MIN)	#10-16 HILTI KWIK-FLEX OR ITW TEKS SELF-DRILLING SCREW	FULL THREAD THRU 0.060"	7/16"
FLANGE	1/8" ALUM. (6063-T5 MIN.) OR 1/8" STEEL (33 KSI MIN.)	#10 GRADE 5 SELF-TAPPING / DRILLING SCREW	FULL THREAD THRU 0.125"	7/16"
FIN	2X MIN. SOUTHERN PINE (G=0.55)	#10 WOOD SCREW	1-1/2"	1/2"

NOTE: UNIF-FRAME OPTIONS NOT SHOWN.

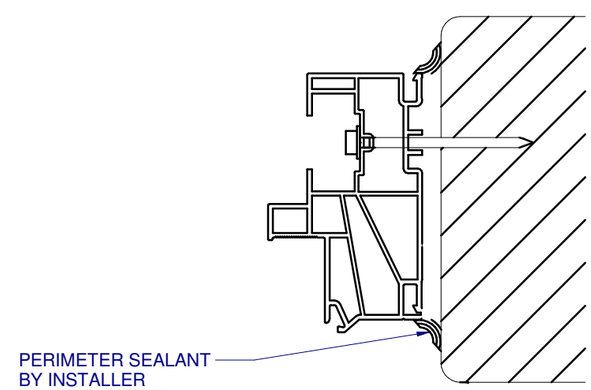

D / 7 HORIZONTAL SECTION
BOX FRAME INSTALLATION
SIMILAR FOR SILL AND JAMBS FOR BOX INSTALLATION

FLANGE REMOVAL NOTE: PARTIALLY OR FULLY REMOVING THE FLANGE, UP TO AND INCLUDING A BOX-FRAME APPLICATION IS ACCEPTABLE PROVIDED:

- MIN. 1/4" FILLET OF CONSTRUCTION-GRADE ADHESIVE CAULK IS APPLIED INSIDE AND OUT, FULL PERIMETER, BY INSTALLER.
- PRODUCT ANCHORAGE IS IN ACCORDANCE WITH REQUIREMENTS AS SHOWN FOR FLANGE WINDOWS.

Custom C WINDOW SYSTEMS
1900 SW 44TH AVE.
OCALA, FLORIDA 34474
WWW.CWS.CC

610 PVC SINGLE HUNG NON-IMPACT

NO.:	DESCRIPTION:	BY:	DATE:

REVISIONS

STATE OF TEXAS
LUCAS A. TURNER
115094
LICENSED
PROFESSIONAL ENGINEER

2/23/2016

LUCAS A. TURNER, P.E.
TX PE # 115094
1239 JABARA AVE.
NORTH PORT, FL 34288
PH. 941-380-1574

SHEET DESCRIPTION:
INSTALLATION DETAILS

DRAWN BY:	DATE:
EMK	12/17/15
DWG #: TDI-935	REV.: -
SCALE: 1:2	SHEET 7 OF 7