ICOLETTE DOORS

FROM OUR DOOR TO YOURS

By R3Composites

14123 Roth Road
Grabill, IN 46741

Nicolette
Opaque Fiberglass Door
INSWING / OUTSWING
"NON-IMPACT"

EVALUATED FOR USE IN THE STATE OF TEXAS

The Fiberglass Door described herein complies with the 2006 International Residential Code (IRC), Sections R301 & R613 and the 2006 International Building Code (IBC), Sections 1405.12, 1609, 1714.5, 2403 and 2404 (including Texas revisions) subject to the following conditions:

1. Anchors shall be as listed and spaced as shown in the details. Anchor embedment to base material shall be beyond wall dressing or stucco.
2. When used in areas requiring wind-borne debris protection this product is required to be protected with an impact resistant covering that complies with Section R301.2.1.2 of the IRC and Section 1609.1.2 of the IBC.
3. Allowable design pressure requirements must be equal to or less than the design pressure rating shown in the design pressure chart, sheet 1 of this drawing.
4. Conditions not covered by this drawing are subject to further engineering analysis.

TABLE OF CONTENTS

SHEET #	DESCRIPTION
1	Typical elevation, design pressures, & general notes
2	Door panel details
3	Horizontal cross sections
4	Vertical cross sections
5	Buck and frame anchoring
6	Bill of materials & components

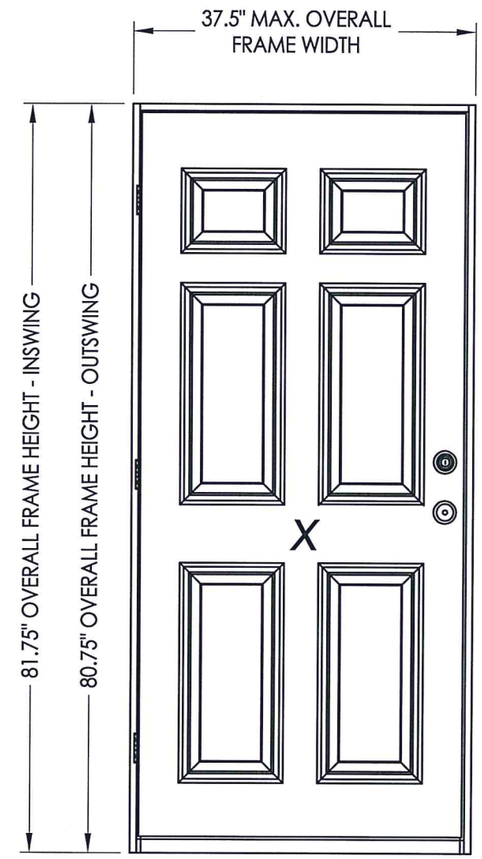

MAX. FRAME DIMENSION	DESIGN PRESSURE (PSF) INSWING		DESIGN PRESSURE (PSF) OUTSWING	
	POSITIVE	NEGATIVE	POSITIVE	NEGATIVE
37.5" x 81.75"	+65.0	-70.0	+65.0	-65.0

STATE OF TEXAS
LYNDON F. SCHMIDT
104123
LICENSED PROFESSIONAL ENGINEER
7-27-15

Documents Prepared By:
Lyndon F. Schmidt, P.E.
TEXAS P.E. #104123
RW BUILDING CONSULTANTS, INC.
P.O. Box 230 Valrico FL. 33595
Phone No.: 813.659.9197
TEXAS BOARD OF PROFESSIONAL ENGINEERS
CERTIFICATE OF REGISTRATION # F-11852

PRODUCT: R3 COMPOSITES

PART OR ASSEMBLY: TYPICAL ELEVATION, DESIGN PRESSURES & GENERAL NOTES

NO.	DATE	REVISIONS	BY

DATE: 7/20/15
SCALE: N.T.S.
DWG. BY: JK
CHK. BY: LFS
DRAWING NO.: TX-4550
SHEET 1 OF 6

© 2015 R.W. BUILDING CONSULTANTS INC.

R:\Clients\R 3 Composites PERMANENT\Texas Dept of Ins\TDI - XXX\Drawings\Current\TX-4550.dwg, TX-4450

HARDWARE TABLE	
MANUFACTURER	MODEL
KWIKSET	KNOB: SERIES (400) DEADBOLT: SERIES (660)
SCHLAGE	KNOB: F51 DEADBOLT: B60N

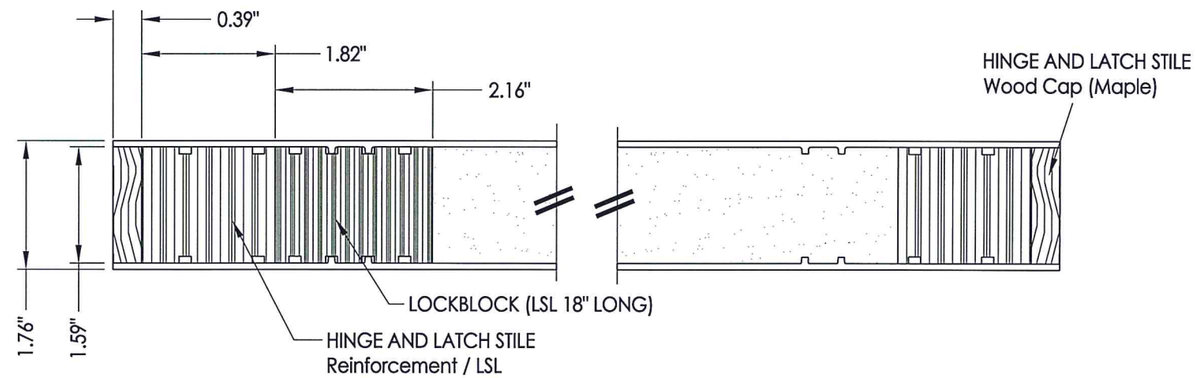

1/2 **HORIZONTAL CROSS SECTION**

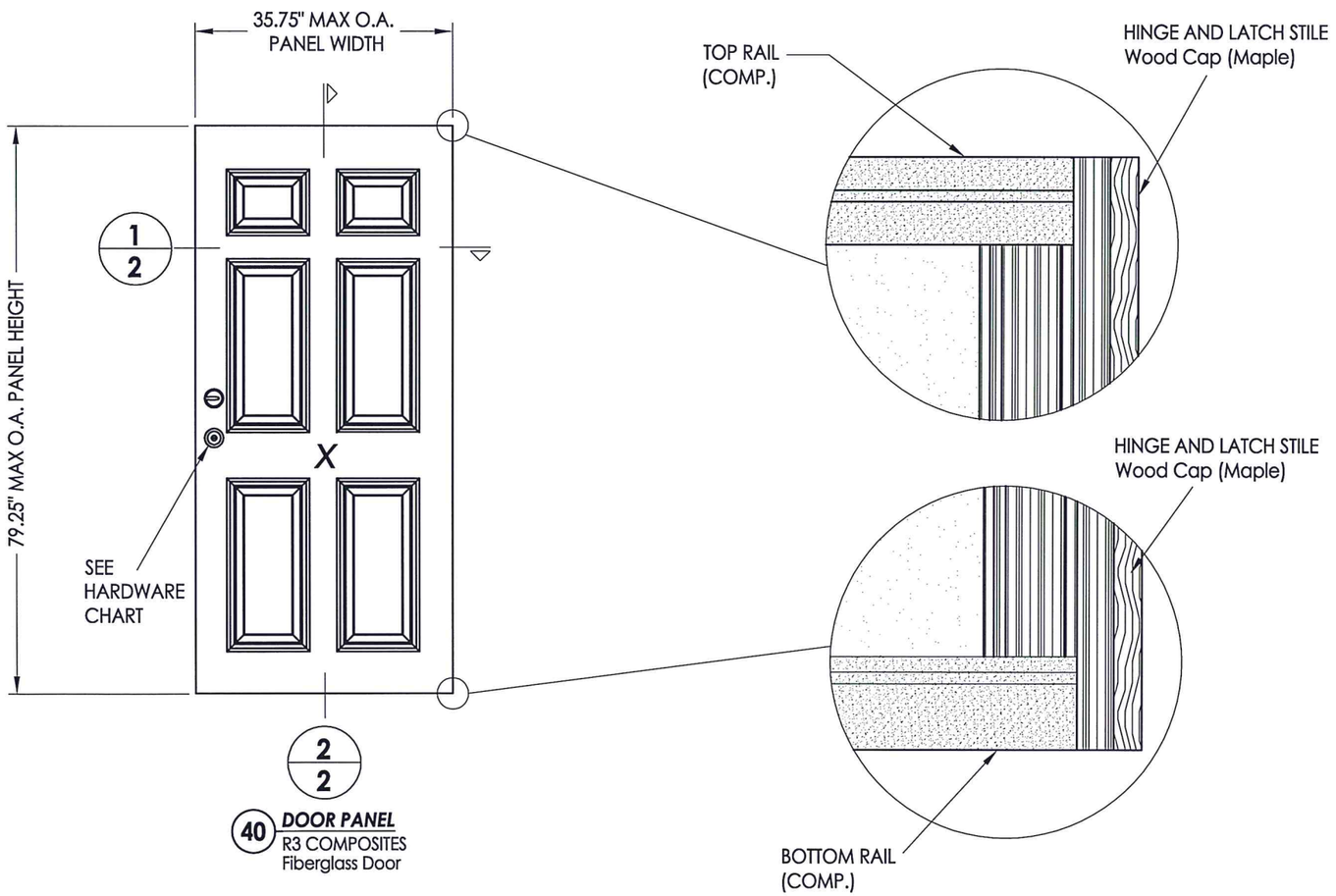

2/2

40 **DOOR PANEL**
R3 COMPOSITES
Fiberglass Door

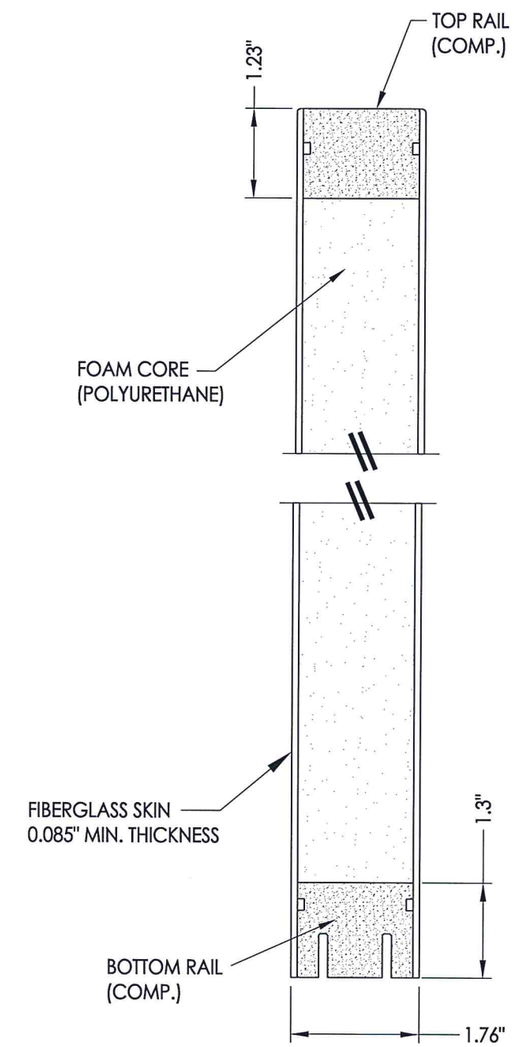

2/2 **VERTICAL CROSS SECTION**

STATE OF TEXAS
LYNDON F. SCHMIDT
104123
LICENSED
PROFESSIONAL ENGINEER
7-20-15

Documents Prepared By:
Lyndon F. Schmidt, P.E.
TEXAS P.E. #104123
RW BUILDING CONSULTANTS, INC.
P.O. Box 230 Valrico FL. 33595
Phone No.: 813.659.9197
TEXAS BOARD OF PROFESSIONAL ENGINEERS
CERTIFICATE OF REGISTRATION # F-11852

PRODUCT: R3 COMPOSITES

PART OR ASSEMBLY: DOOR PANEL DETAILS

REVISIONS

NO.	DATE	BY

DATE: 7/20/15
SCALE: N.T.S.
DWG. BY: JK
CHK. BY: LFS
DRAWING NO.: TX-4550
SHEET 2 OF 6

© 2015 R.W. BUILDING CONSULTANTS INC.

R:\Clients\R 3 Composites PERMANENT\Texas Dept of Ins\TDI - XXX\Drawings\Current\TX-4550.dwg, 1-2

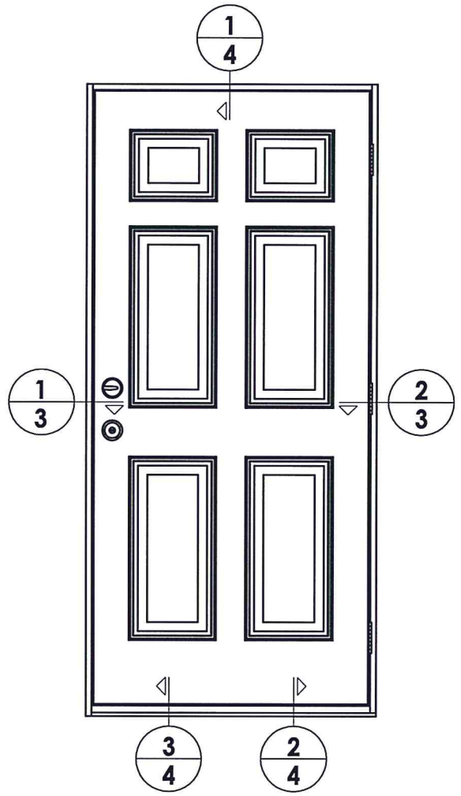

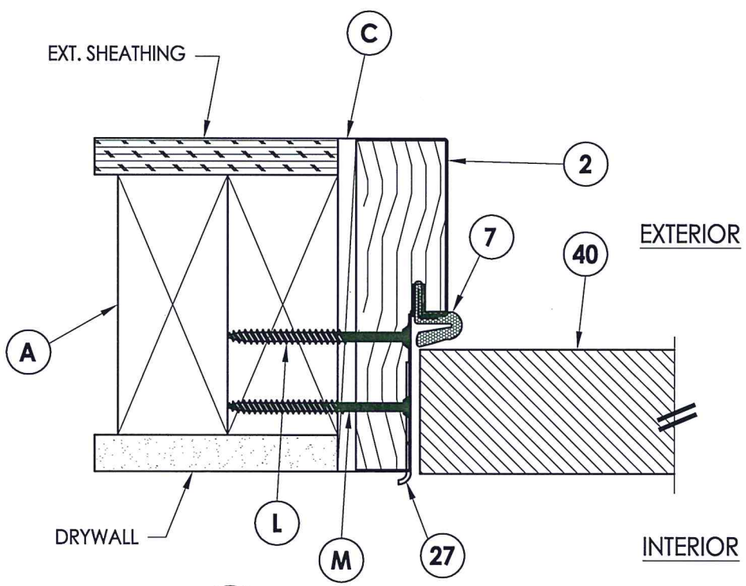

1/3 **HORIZONTAL CROSS SECTION**
Inswing shown (Outswing similar)

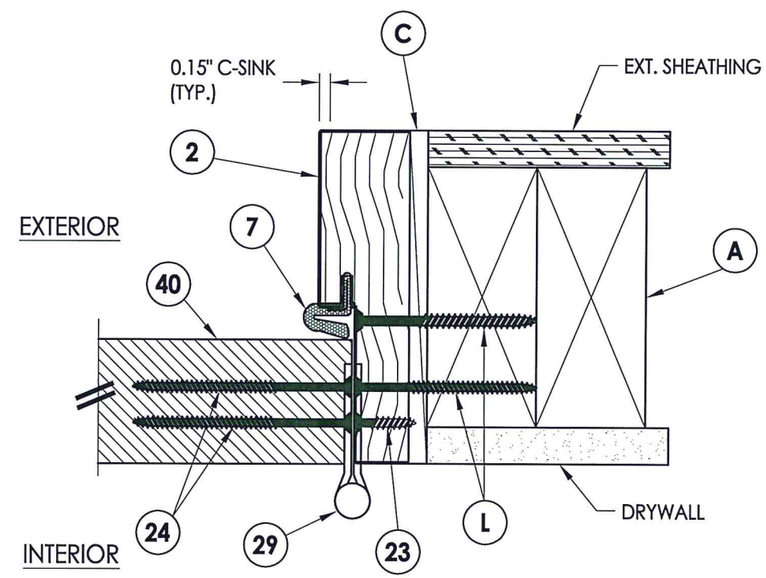

2/3 **HORIZONTAL CROSS SECTION**
Inswing shown (Outswing similar)

STATE OF TEXAS
LYNDON F. SCHMIDT
104123
LICENSED PROFESSIONAL ENGINEER
7-27-15

Documents Prepared By:

Lyndon F. Schmidt, P.E.
TEXAS P.E. #104123

RW BUILDING CONSULTANTS, INC.
P.O. Box 230 Valrico FL. 33595
Phone No.: 813.659.9197

TEXAS BOARD OF PROFESSIONAL ENGINEERS
CERTIFICATE OF REGISTRATION # F-11852

PRODUCT: R3 COMPOSITES

PART OR ASSEMBLY: HORIZONTAL CROSS SECTIONS

NO.	DATE	REVISIONS	BY

DATE: 7/20/15
SCALE: N.T.S.
DWG. BY: JK
CHK. BY: LFS
DRAWING NO.: TX-4550
SHEET 3 OF 6

© 2015 R.W. BUILDING CONSULTANTS INC.

R:\Clients\R 3 Composites PERMANENT\Texas Dept of Ins\TDI - XXX\Drawings\Current\TX-4550.dwg, 1-3

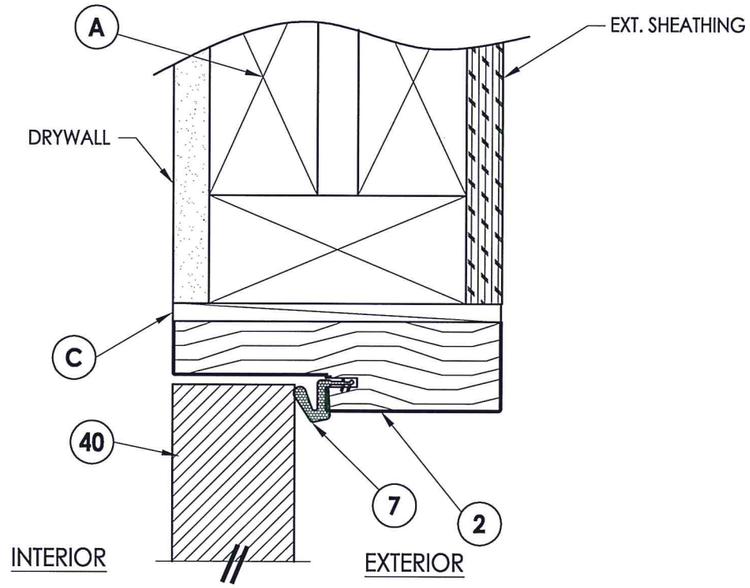

1/4 **VERTICAL CROSS SECTION**
Inswing shown (Outswing similar)

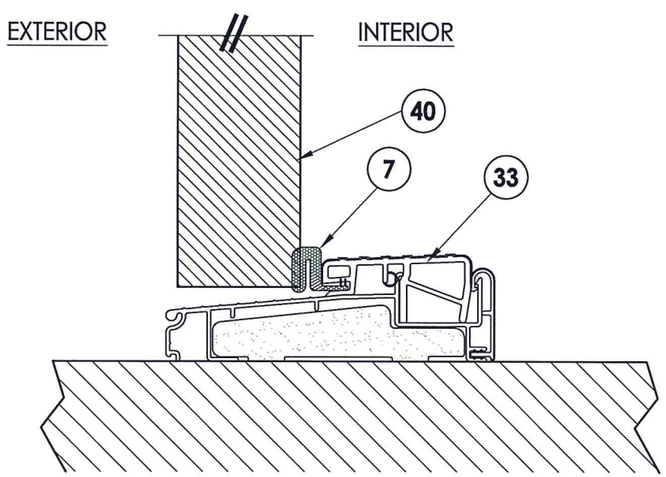

3/4 **VERTICAL CROSS SECTION**
Outswing confirguration

NOTE:
1. Item #9 location, 2" from each end and 2 more equally space (4) total.

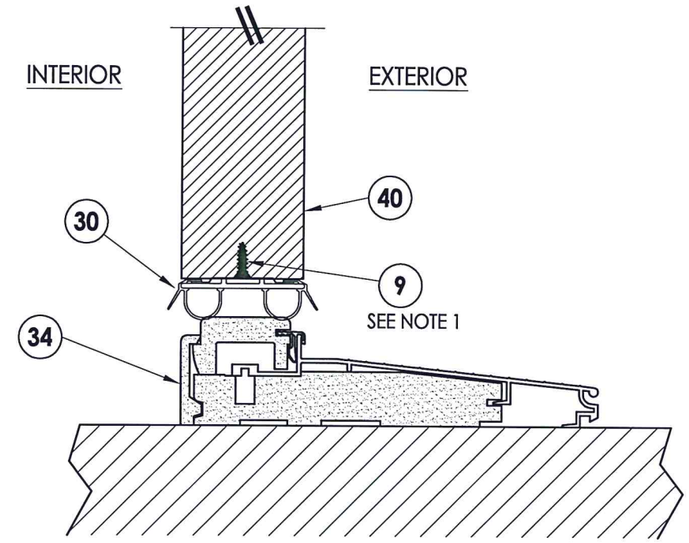

2/4 **VERTICAL CROSS SECTION**
Inswing configuration

STATE OF TEXAS
LYNDON F. SCHMIDT
104123
LICENSED
PROFESSIONAL ENGINEER

Documents Prepared By:
Lyndon F. Schmidt, P.E.
TEXAS P.E. #104123
RW BUILDING CONSULTANTS, INC.
P.O. Box 230 Valrico FL. 33595
Phone No.: 813.659.9197
TEXAS BOARD OF PROFESSIONAL ENGINEERS
CERTIFICATE OF REGISTRATION # F-11852

PRODUCT: R3 COMPOSITES

PART OR ASSEMBLY: VERTICAL CROSS SECTIONS

NO.	DATE	REVISIONS	BY

DATE: 7/20/15
SCALE: N.T.S.
DWG. BY: JK
CHK. BY: LFS
DRAWING NO.: TX-4550
SHEET 4 OF 6

© 2015 R.W. BUILDING CONSULTANTS INC.

R:\Clients\R 3 Composites PERMANENT\Texas Dept of Ins\TDI - XXX\Drawings\Current\TX-4550.dwg, 1-4

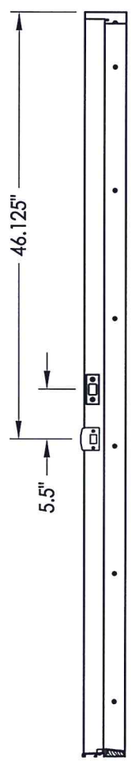

STRIKE JAMB

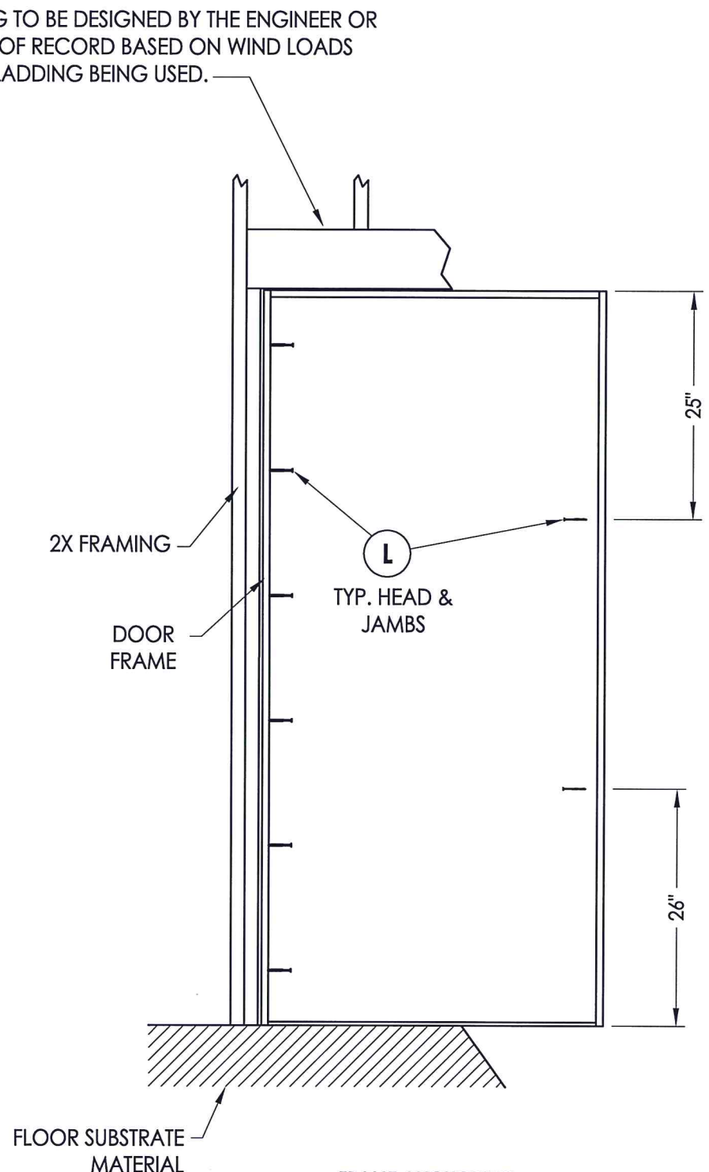

FRAME ANCHORING

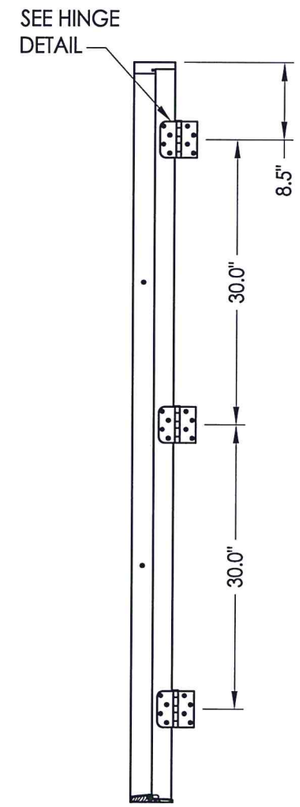

HINGE JAMB

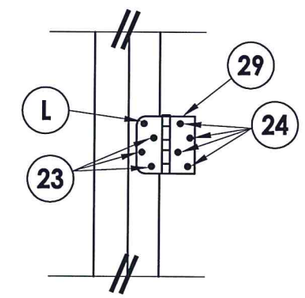

HINGE DETAIL

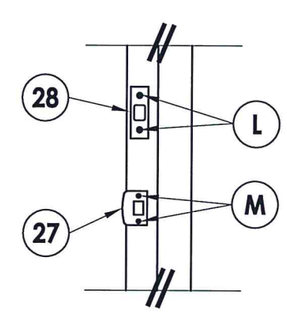

LATCH & DEADBOLT DETAIL

STATE OF TEXAS
LYNDON F. SCHMIDT
104123
LICENSED PROFESSIONAL ENGINEER

7.27.15

Documents Prepared By:

Lyndon F. Schmidt, P.E.
TEXAS P.E. #104123

RW BUILDING CONSULTANTS, INC.
P.O. Box 230 Valrico FL. 33595
Phone No.: 813.659.9197

TEXAS BOARD OF PROFESSIONAL ENGINEERS
CERTIFICATE OF REGISTRATION # F-11852

PRODUCT: R3 COMPOSITES

PART OR ASSEMBLY: BUCK AND FRAME ANCHORING

NO.	DATE	BY

REVISIONS

DATE: 7/20/15
SCALE: N.T.S.
DWG. BY: JK
CHK. BY: LFS
DRAWING NO.: TX-4550
SHEET 5 OF 6

© 2015 R.W. BUILDING CONSULTANTS INC.

R:\Clients\R 3 Composites PERMANENT\Texas Dept of Ins\TDI - XXX\Drawings\Current\TX-4550.dwg, 1-5

BILL OF MATERIALS

ITEM #	DESCRIPTION	MATERIAL
A	2X FRAMING SG >= 0.42	WOOD
C	1/4" MAX. SHIM SPACE	-
L	#10 X 2-1/2" PFH WOOD SCREW (1.15" MIN. EMB.)	STEEL
M	#8 X 2-1/2" PFH WOOD SCREW	STEEL
2	FINGER JOINTED PINE FRAME	WOOD
7	WEATHERSTRIP	FOAM
9	#8 X 1/2" PFH WOOD SCREW	STEEL
23	#10 X 3/4" PFH WOOD SCREW	STEEL
24	#9 X 3" PFH WOOD SCREW	STEEL
27	LATCH STRIKE PLATE	STEEL
28	DEADBOLT STRIKE PLATE	STEEL
29	4" X 4" BUTT HINGE	STEEL
30	DOOR BOTTOM SWEEP WITH STEEL RETAINER	VINYL
33	OUTSWING THRESHOLD	ALUM. / WOOD
34	INSWING ADJUSTABLE THRESHOLD	ALUM. / WOOD
40	DOOR PANEL - SEE DOOR PANEL DETAIL SHEET FOR CONSTRUCTION DETAILS	-

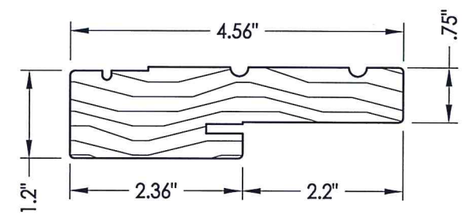

2 **WOOD JAMB**

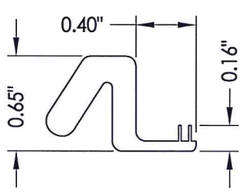

7 **WEATHERSTRIP**
Endura Force 5

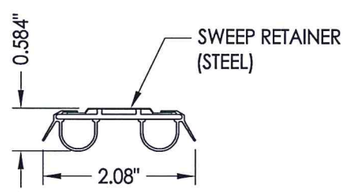

30 **DOOR BOTTOM SWEEP**

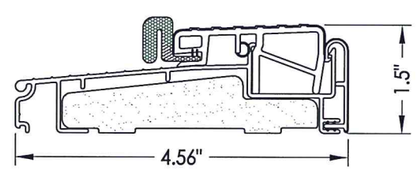

33 **OUTSWING THRESHOLD**
By Endura

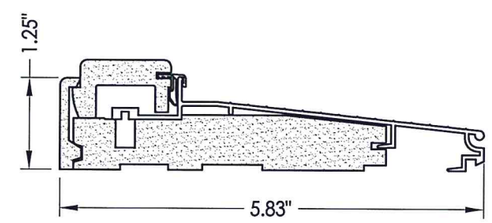

34 **ADJUSTABLE INSWING THRESHOLD**
By Endura

STATE OF TEXAS
LYNDON F. SCHMIDT
104123
LICENSED
PROFESSIONAL ENGINEER
7-27-15

Documents Prepared By:
Lyndon F. Schmidt, P.E.
TEXAS P.E. #104123
R3W BUILDING CONSULTANTS, INC.
P.O. Box 230 Valrico FL. 33595
Phone No.: 813.659.9197
TEXAS BOARD OF PROFESSIONAL ENGINEERS
CERTIFICATE OF REGISTRATION # F-11852

PRODUCT: R3 COMPOSITES

PART OR ASSEMBLY: BILL OF MATERIALS & COMPONENTS

REVISIONS

NO.	DATE	BY

DATE: 7/20/15
SCALE: N.T.S.
DWG. BY: JK
CHK. BY: LFS
DRAWING NO.: TX-4550
SHEET 6 OF 6

© 2015 R.W. BUILDING CONSULTANTS INC.

R:\Clients\R 3 Composites PERMANENT\Texas Dept of Ins\TDI - XXX\Drawings\Current\TX-4550.dwg,1-6