TRINITY GLASS INTERNATIONAL
33615 1st Way S, Federal Way, WA 98003

OPAQUE FIBERGLASS DOUBLE DOOR
w/ SIDELITE(S)
"IMPACT"
INSWING / OUTSWING

EVALUATED FOR USE IN THE STATE OF TEXAS

The Fiberglass Door system described herein complies with the 2018 International Residential Code (IRC), Sections R301 & R609 and the 2018 International Building Code (IBC), Sections 1404.13, 1609, 1709.5, 2403 and 2404 subject to the following conditions:

1. Anchors shall be as listed and spaced as shown in the details. Anchor embedment to base material shall be beyond wall dressing or stucco.
2. This system has been tested and evaluated as a large missile impact protective system for installation in areas that require wind borne debris protection. This product meets missile level "D" as defined in ASTM E 1996.
3. Allowable design pressure requirements must be equal to or less than the design pressure rating shown in the design pressure chart, sheet 1 of this drawing.
4. Conditions not covered by this drawing are subject to further engineering analysis.

TABLE OF CONTENTS

SHEET #	DESCRIPTION
1	Typical elevations, design pressures & general notes
2	Door panel details
3	Sidelite panel details
4	Elevations
5	Horizontal & vertical cross sections
6	Horizontal cross sections
7	Vertical cross sections
8	Frame anchoring
9	Components
10	Bill of materials

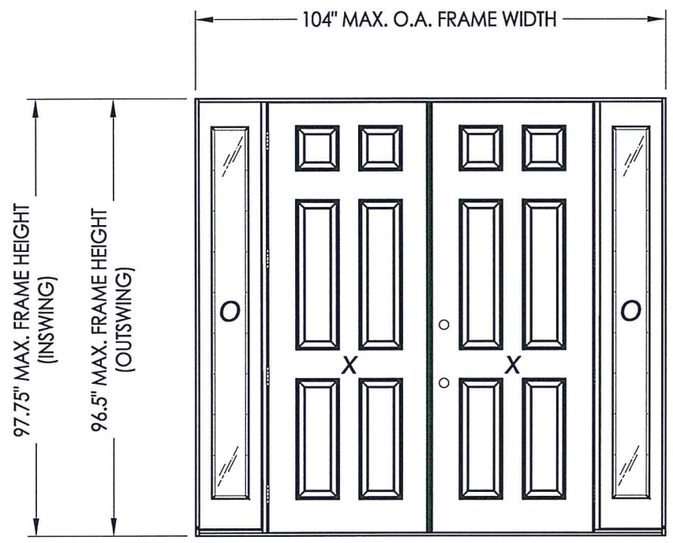

Continuous Head and Sill

CONFIGURATION	FRAME MATERIAL	DESIGN PRESSURE (PSF) INSWING		DESIGN PRESSURE (PSF) OUTSWING	
		POSITIVE	NEGATIVE	POSITIVE	NEGATIVE
OXXO	FJ PINE	+45.0	-45.0	+45.0	-45.0
OXXO	COMPOSITE	+45.0	-45.0	+45.0	-45.0

STATE OF TEXAS
LYNDON F. SCHMIDT
104123
LICENSED PROFESSIONAL ENGINEER
3-7-21

Documents Prepared By: Lyndon F. Schmidt, P.E.
TEXAS P.E. #104123
RW BUILDING CONSULTANTS, INC.
P.O. Box 230 Valrico FL. 33595
Phone No.: 813.659.9197
CERTIFICATE OF REGISTRATION # F-11852

PRODUCT: TRINITY GLASS INT'L

PART OR ASSEMBLY: TYPICAL ELEVATION, DESIGN PRESSURES & GENERAL NOTES

NO.	DATE	REVISIONS	BY

DATE: 3/25/21
SCALE: N.T.S.
DWG. BY: RW
CHK. BY: LFS
DRAWING NO.: TX-5168
SHEET 1 OF 10

Z:\Clients\Trinity Glass PERMANENT\B - Texas Dept of Ins\DR-XXX 8-0 OP FG - IMP\C - Drawings\TX-5166-68.dwg

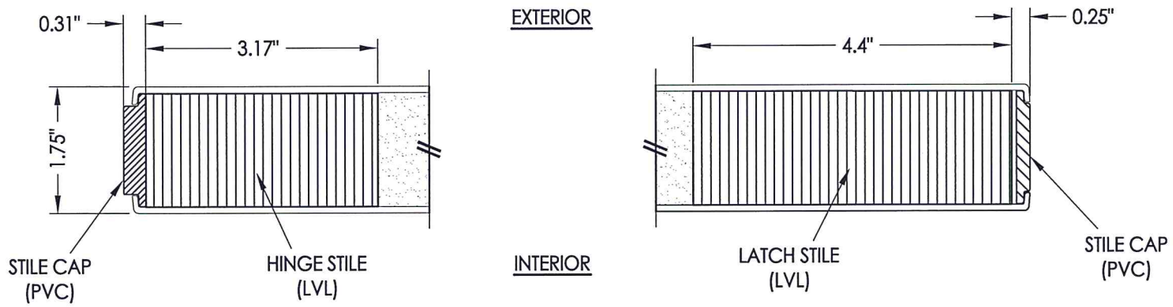

1/2 **HORIZONTAL CROSS SECTION**

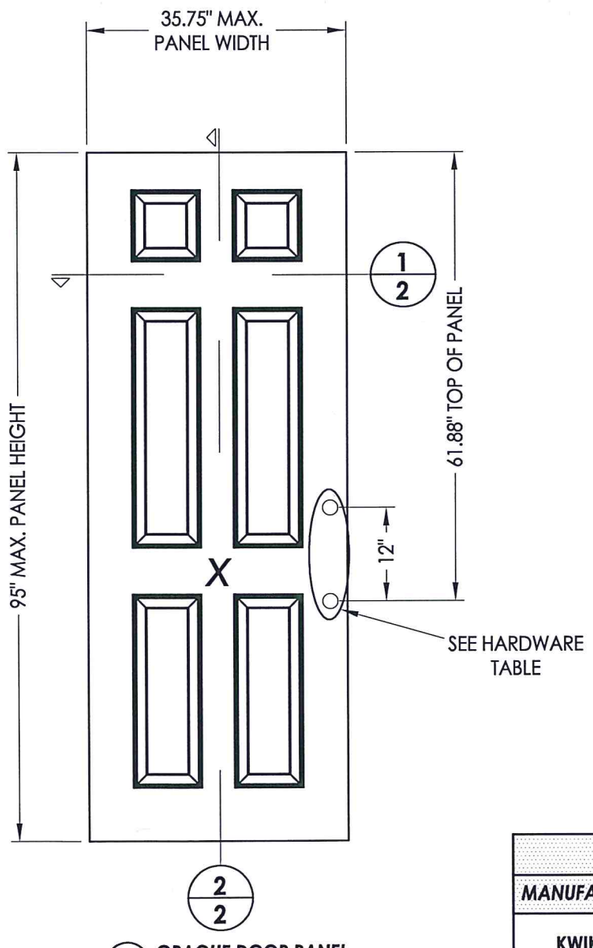

40 **OPAQUE DOOR PANEL**
Fiberglass "Cherry"

DOOR SKIN: 0.085" MIN. THK. FIBERGLASS
CORE MATERIAL: POLYURETHANE FOAM

HARDWARE CHART		
MANUFACTURER	MODEL	
KWIKSET	KNOB:	SIGNATURE SERIES
	DEADBOLT:	SIGNATURE SERIES (980)
SCHLAGE	KNOB:	F SERIES
	DEADBOLT:	B60 SERIES

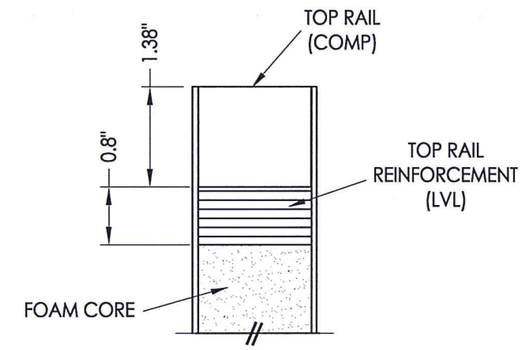

EXTERIOR INTERIOR

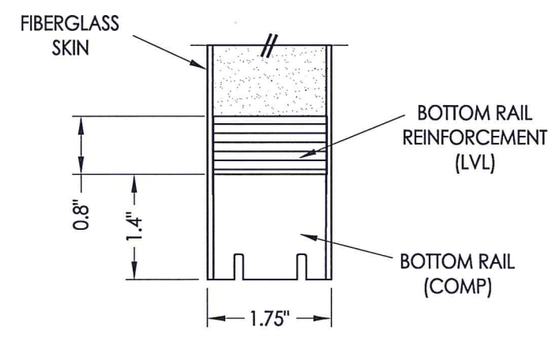

2/2 **VERTICAL CROSS SECTION**

STATE OF TEXAS
LYNDON F. SCHMIDT
104123
PROFESSIONAL ENGINEER
LICENSED
3-7-21

Documents Prepared By: Lyndon F. Schmidt, P.E.
TEXAS P.E. #104123
RW BUILDING CONSULTANTS, INC.
P.O. Box 230 Valrico FL. 33595
Phone No.: 813.659.9197
CERTIFICATE OF REGISTRATION # F-11852

PRODUCT: TRINITY GLASS INT'L
PART OR ASSEMBLY: DOOR PANEL DETAILS

REVISIONS

NO.	DATE	BY

DATE: 3/25/21
SCALE: N.T.S.
DWG. BY: RW
CHK. BY: LFS
DRAWING NO.: TX-5168
SHEET 2 OF 10

© 2021 R.W. BUILDING CONSULTANTS INC.

Z:\Clients\Trinity Glass PERMANENT\B - Texas Dept of Ins\DR-XXX 8-0 OP FG - IMP\C - Drawings\TX-5166-68.dwg

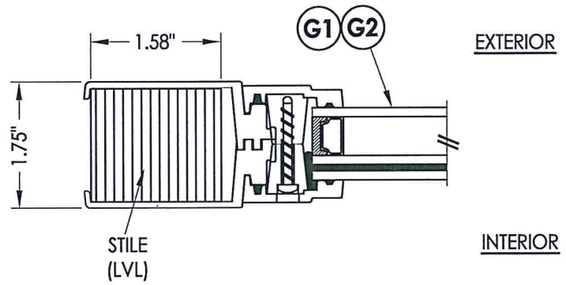

1/3 **HORIZONTAL CROSS SECTION**

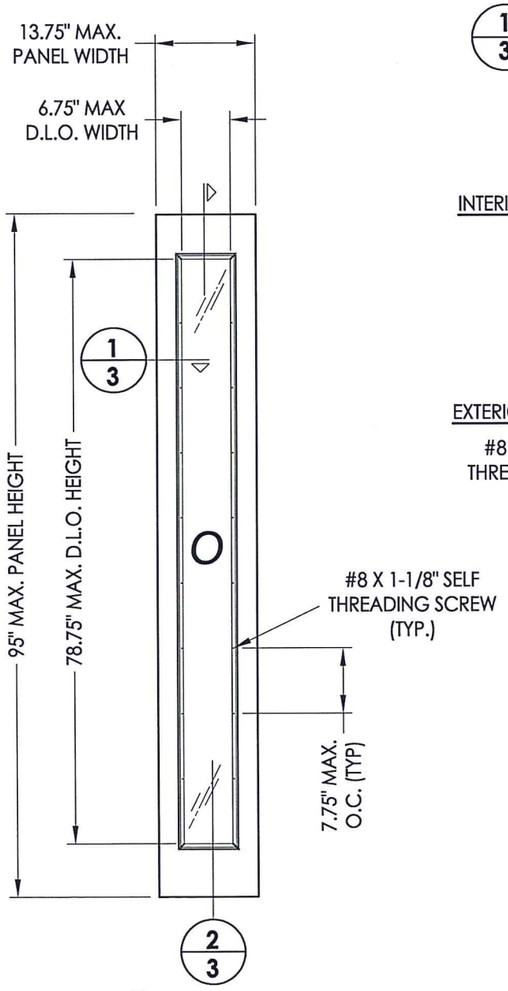

50 **SIDELITE PANEL**
Fiberglass

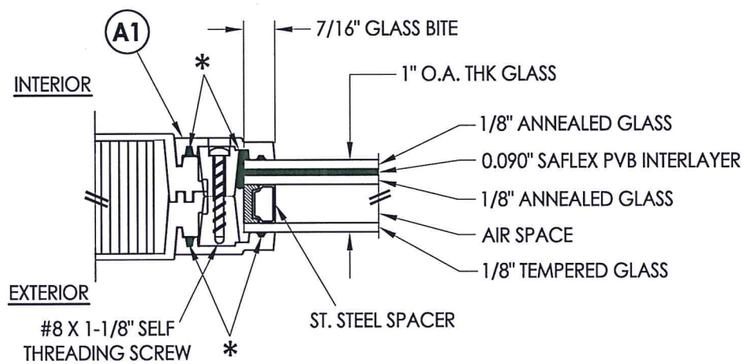

G1 **GLAZING DETAIL**
DUAL GLAZED

*DOW 995 STRUCTURAL SEALANT

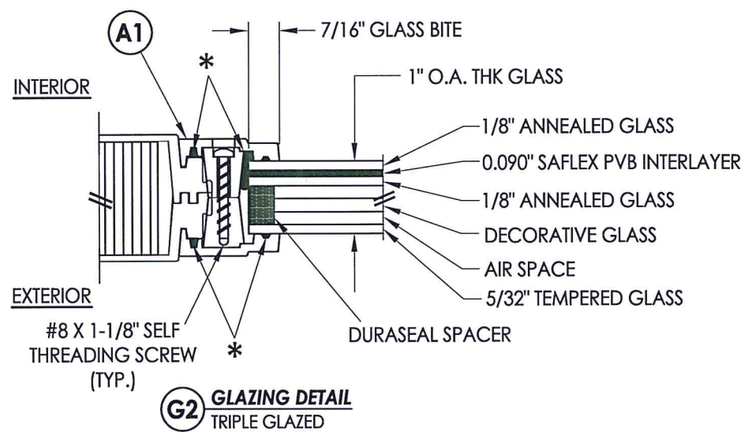

G2 **GLAZING DETAIL**
TRIPLE GLAZED

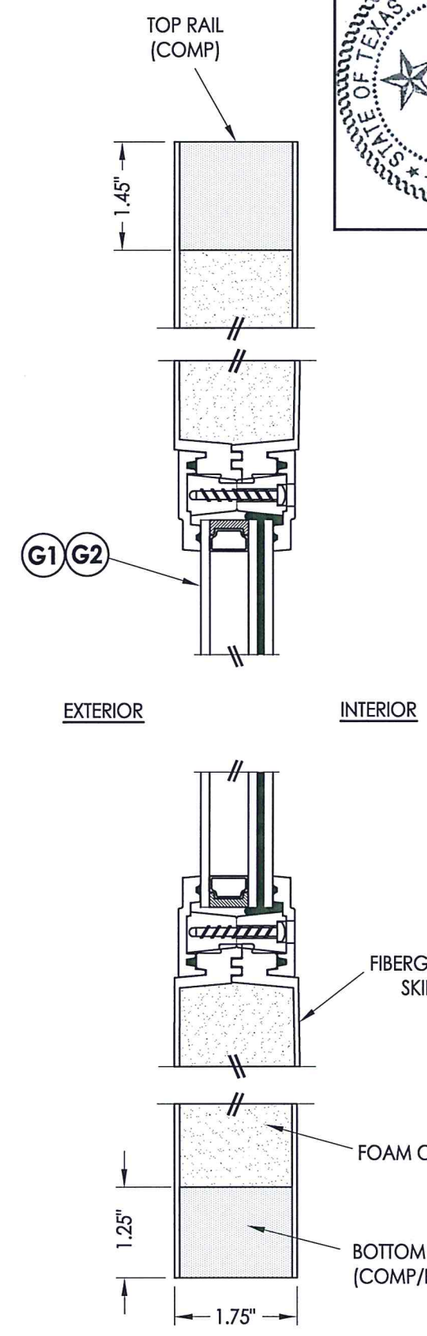

2/3 **VERTICAL CROSS SECTION**

DOOR SKIN: 0.075" MIN. THK. FIBERGLASS
CORE MATERIAL: POLYURETHANE FOAM

STATE OF TEXAS
LYNDON F. SCHMIDT
104123
LICENSED PROFESSIONAL ENGINEER
3/25/21

Documents Prepared By: Lyndon F. Schmidt, P.E.
TEXAS P.E. #104123
RW BUILDING CONSULTANTS, INC.
P.O. Box 230 Valrico FL. 33595
Phone No.: 813.659.9197
CERTIFICATE OF REGISTRATION # F-11852

PRODUCT: TRINITY GLASS INT'L
PART OR ASSEMBLY: DOOR PANEL DETAILS

NO.	DATE	REVISIONS	BY

DATE: 3/25/21
SCALE: N.T.S.
DWG. BY: RW
CHK. BY: LFS
DRAWING NO.: TX-5168
SHEET 3 OF 10

© 2021 R.W. BUILDING CONSULTANTS INC.

Z:\Clients\Trinity Glass PERMANENT\B - Texas Dept of Ins\DR-XXX 8-0 OP FG - IMP\C - Drawings\TX-5166-68.dwg

Z:\Clients\Trinity Glass PERMANENT\B - Texas Dept of Ins\DR-XXX 8-0 OP FG - IMP\C - Drawings\TX-5166-68.dwg

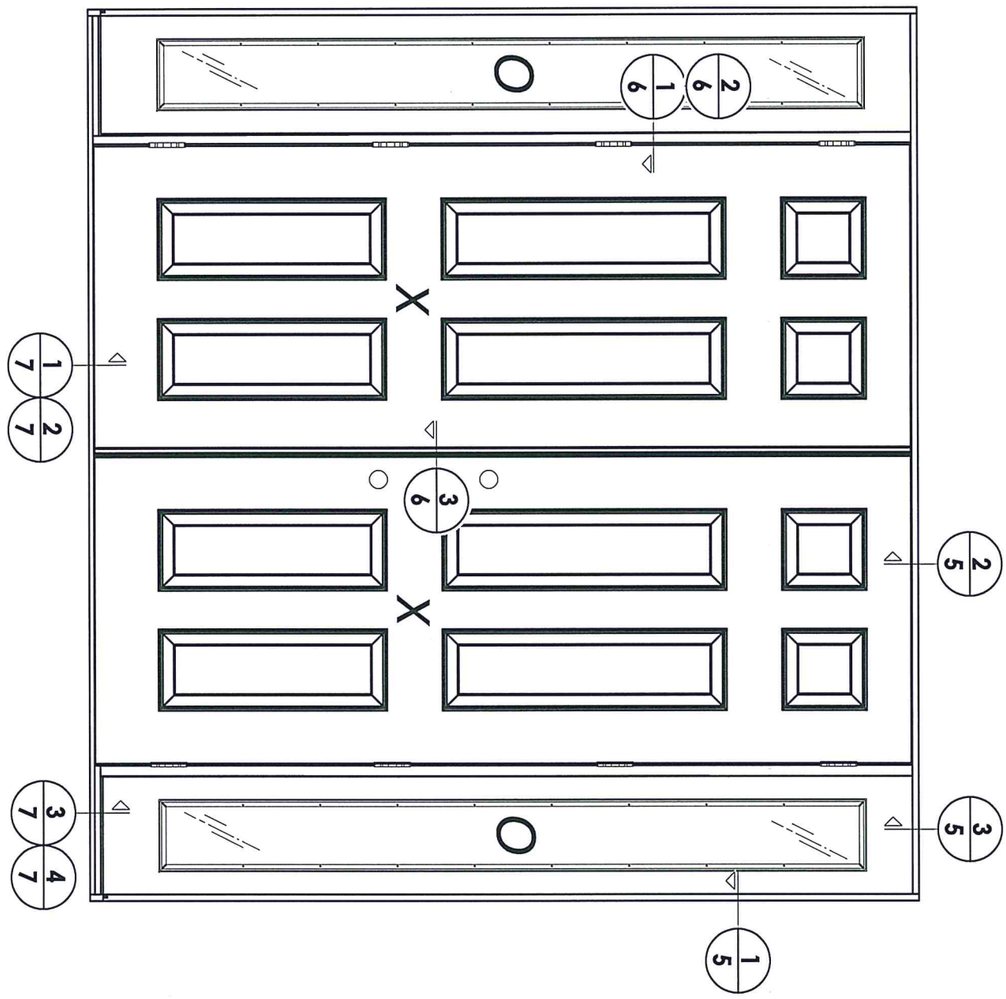

STATE OF TEXAS
LYNDON F. SCHMIDT
104123
LICENSED
PROFESSIONAL ENGINEER

9.7.21

SHEET 4 OF 10	
DRAWING NO.:	TX-5168
CHK. BY:	LFS
DWG. BY:	RW
SCALE:	N.T.S.
DATE:	3/25/21

NO.	DATE		BY

REVISIONS

PRODUCT:
TRINITY GLASS INT'L

PART OR ASSEMBLY:
ELEVATIONS

Documents Prepared By:
Lyndon F. Schmidt, P.E.
TEXAS P.E. #104123

RW BUILDING CONSULTANTS, INC.
P.O. Box 230 Valrico FL. 33595
Phone No.: 813.659.9197

CERTIFICATE OF REGISTRATION # F-11852

© 2021 R.W. Building Consultants Inc.

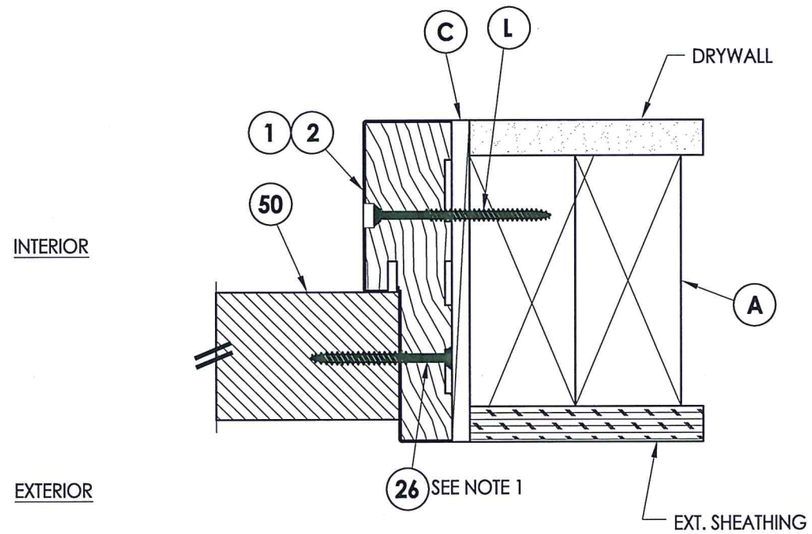

1/5 **HORIZONTAL CROSS SECTION**
Outswing shown (Inswing similar)

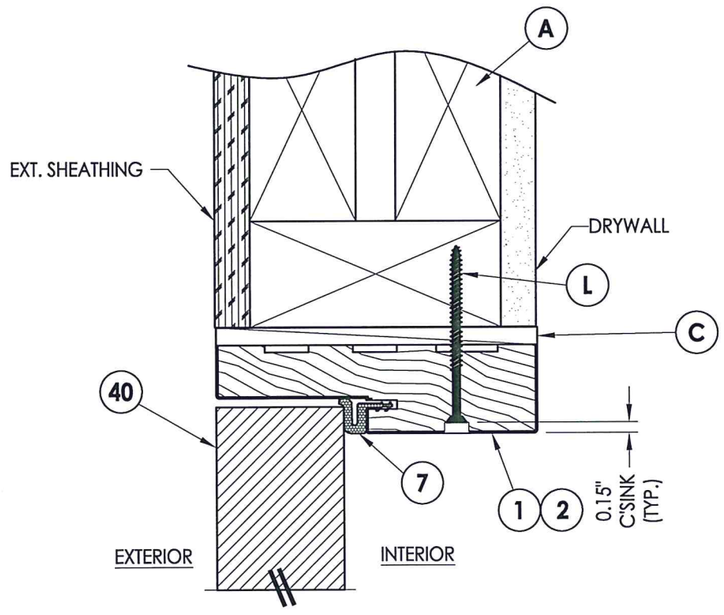

2/5 **VERTICAL CROSS SECTION**
Outswing shown (Inswing similar)

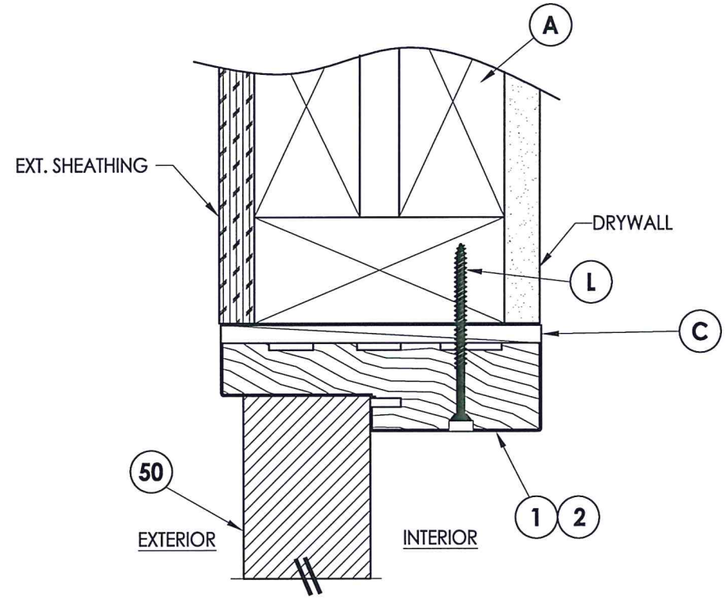

3/5 **VERTICAL CROSS SECTION**
Outswing shown (Inswing similar)

NOTES:
1. Item #26 located 6" from each end and 3 more equally spaced (5 total).

STATE OF TEXAS
LYNDON F. SCHMIDT
104123
LICENSED PROFESSIONAL ENGINEER
3-7-21

Documents Prepared By: Lyndon F. Schmidt, P.E.
TEXAS P.E. #104123
RW BUILDING CONSULTANTS, INC.
P.O. Box 230 Valrico FL. 33595
Phone No.: 813.659.9197
CERTIFICATE OF REGISTRATION # F-11852

PRODUCT: TRINITY GLASS INT'L
PART OR ASSEMBLY: HORIZONTAL & VERTICAL CROSS SECTIONS

NO.	DATE	REVISIONS	BY

DATE: 3/25/21
SCALE: N.T.S.
DWG. BY: RW
CHK. BY: LFS
DRAWING NO.: TX-5168
SHEET 5 OF 10

© 2021 R.W. BUILDING CONSULTANTS INC.

Z:\Clients\Trinity Glass PERMANENT\B - Texas Dept of Ins\DR-XXX 8-0 OP FG - IMP\C - Drawings\TX-5166-68.dwg

NOTES:
1. Item #26 located @ 6", 20" & 34" from the head down and @ 6" & 20" from the sill up (5 screws total).
2. Item #26 equally spaced between each hinge (3 total).

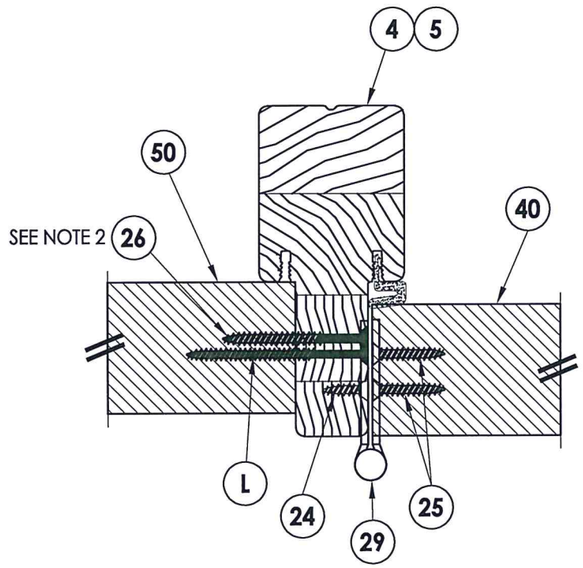

1/6 **HORIZONTAL CROSS SECTION**
Outswing shown - Inswing also approved

INTERIOR

EXTERIOR

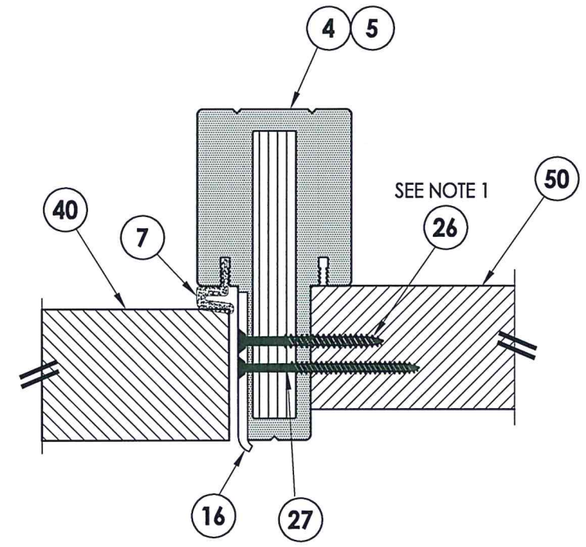

2/6 **HORIZONTAL CROSS SECTION**
Outswing shown - Inswing also approved

INTERIOR

EXTERIOR

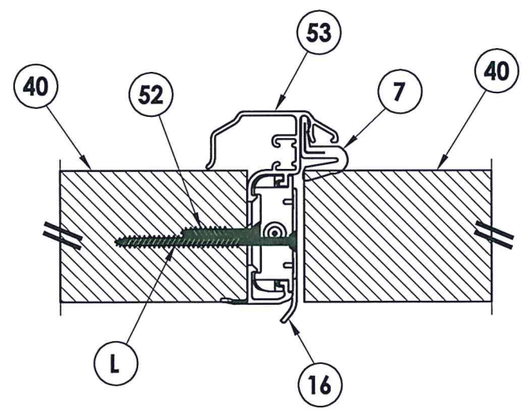

3/6 **HORIZONTAL CROSS SECTION**
Outswing shown - Inswing also approved

STATE OF TEXAS
LYNDON F. SCHMIDT
104123
LICENSED
PROFESSIONAL ENGINEER

Documents Prepared By: Lyndon F. Schmidt, P.E.
TEXAS P.E. #104123
RW BUILDING CONSULTANTS, INC.
P.O. Box 230 Valrico FL. 33595
Phone No.: 813.659.9197
CERTIFICATE OF REGISTRATION # F-11852

PRODUCT: TRINITY GLASS INT'L

PART OR ASSEMBLY: HORIZONTAL CROSS SECTIONS

NO.	DATE	REVISIONS	BY

DATE: 3/25/21
SCALE: N.T.S.
DWG. BY: RW
CHK. BY: LFS
DRAWING NO.: TX-5168
SHEET 6 OF 10

© 2021 R.W. BUILDING CONSULTANTS INC.

Z:\Clients\Trinity Glass PERMANENT\B - Texas Dept of Ins\DR-XXX 8-0 OP FG - IMP\C - Drawings\TX-5166-68.dwg

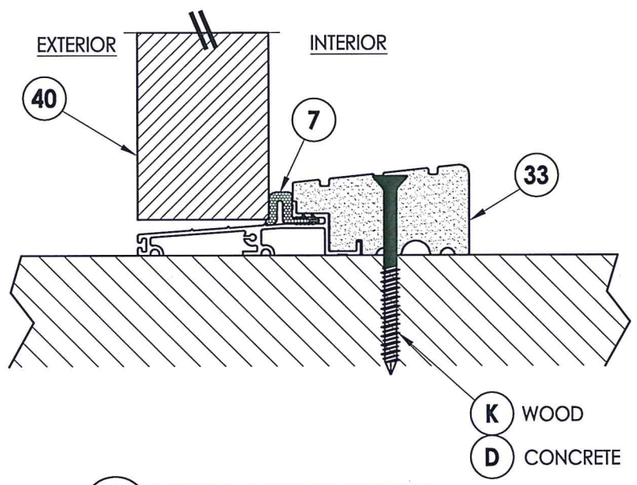

1/7 **VERTICAL CROSS SECTION**
Outswing sill - high dam

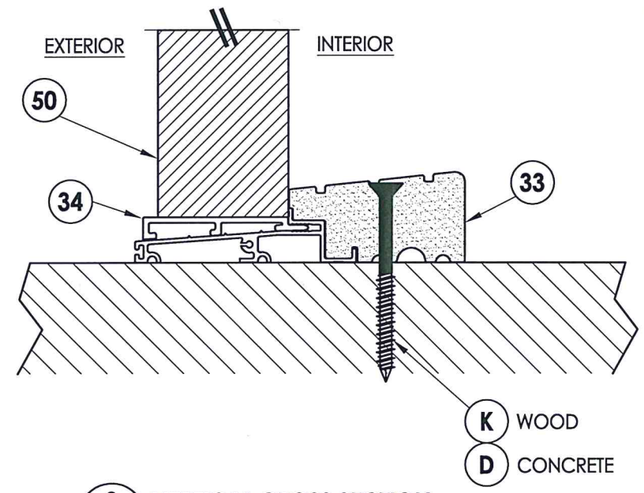

3/7 **VERTICAL CROSS SECTION**
Outswing sill - high dam

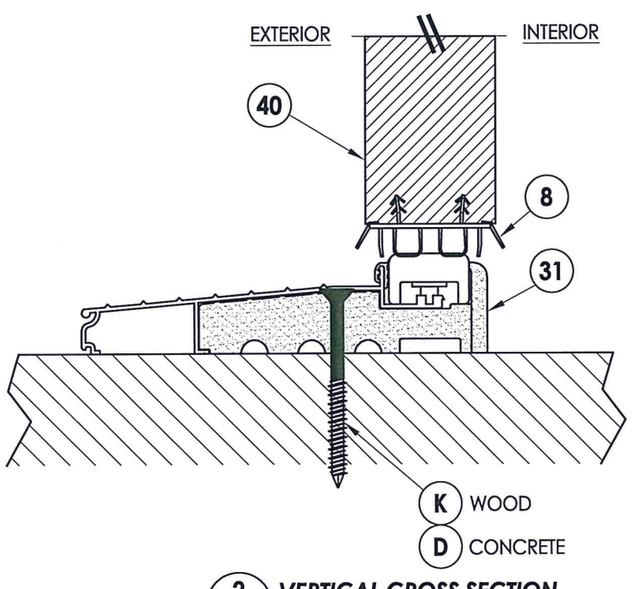

2/7 **VERTICAL CROSS SECTION**
Inswing sill

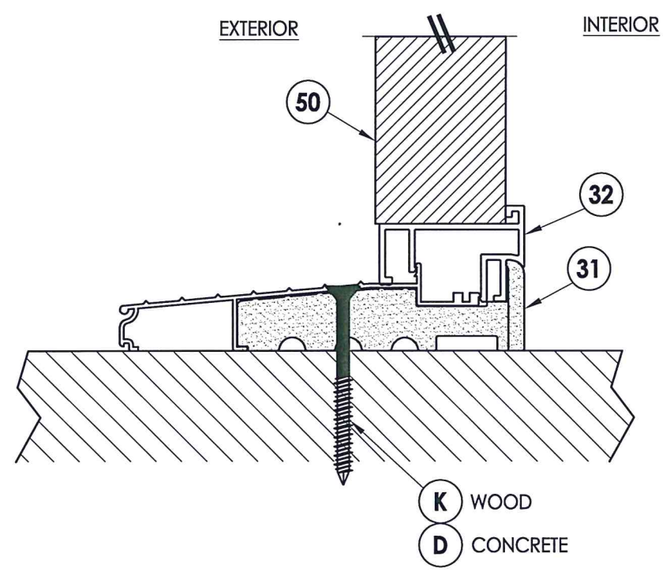

4/7 **VERTICAL CROSS SECTION**
Inswing sill

STATE OF TEXAS
LYNDON F. SCHMIDT
104123
LICENSED PROFESSIONAL ENGINEER
5-7-21

Documents Prepared By: Lyndon F. Schmidt, P.E.
TEXAS P.E. #104123

RW BUILDING CONSULTANTS, INC.
P.O. Box 230 Valrico FL. 33595
Phone No.: 813.659.9197

CERTIFICATE OF REGISTRATION # F-11852

PRODUCT: TRINITY GLASS INT'L

PART OR ASSEMBLY: VERTICAL CROSS SECTIONS

NO.	DATE	REVISIONS	BY

DATE: 3/25/21
SCALE: N.T.S.
DWG. BY: RW
CHK. BY: LFS
DRAWING NO.: TX-5168
SHEET 7 OF 10

© 2021 R.W. BUILDING CONSULTANTS INC.

Z:\Clients\Trinity Glass PERMANENT\B - Texas Dept of Ins\DR-XXX 8-0 OP FG - IMP\C - Drawings\TX-5166-68.dwg

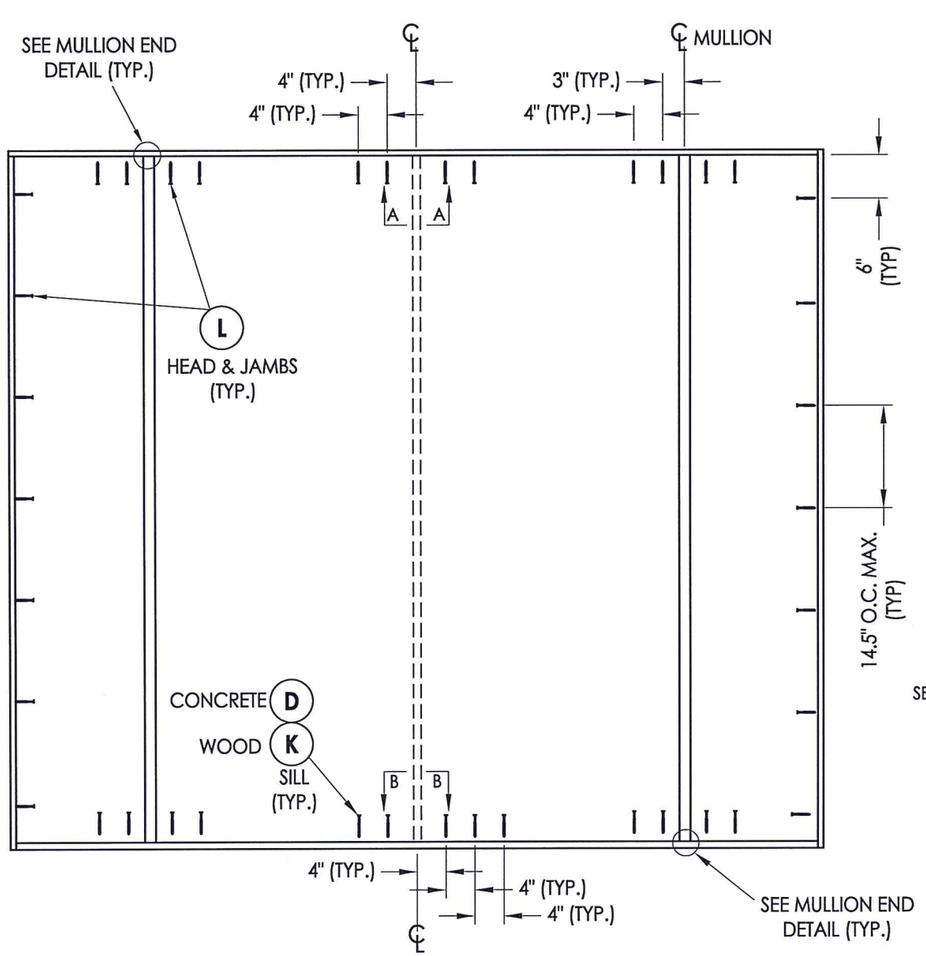

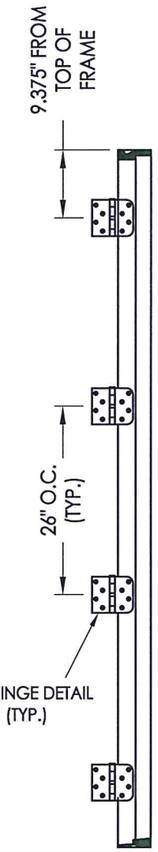

HINGE JAMB

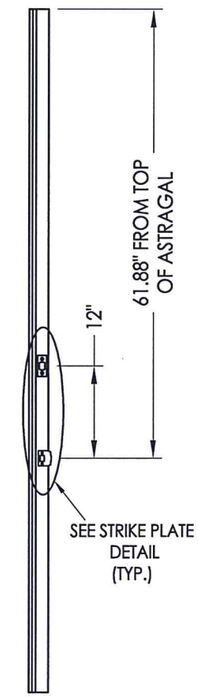

ASTRAGAL

OXXO

FRAME ANCHORING

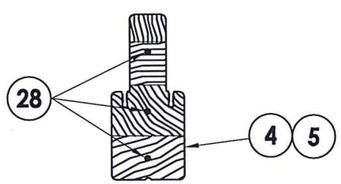

MULLION END DETAIL
(TYP. @ HEAD & SILL)

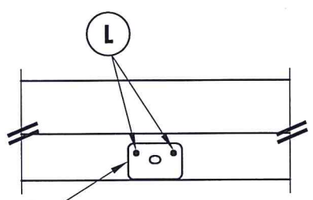

VIEW A-A
Astragal strike @ head

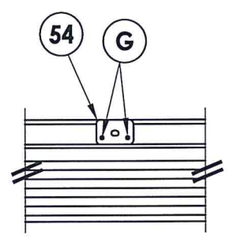

VIEW B-B
Astragal strike @ sill
Inswing

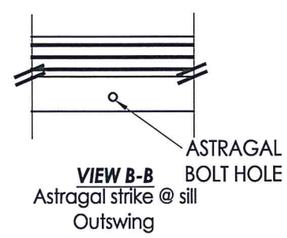

VIEW B-B
Astragal strike @ sill
Outswing

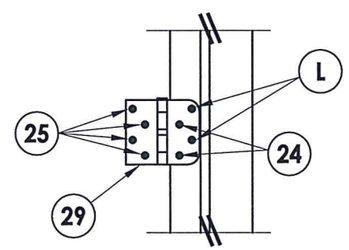

HINGE DETAIL
INSWING

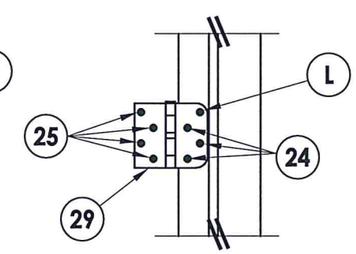

HINGE DETAIL
OUTSWING

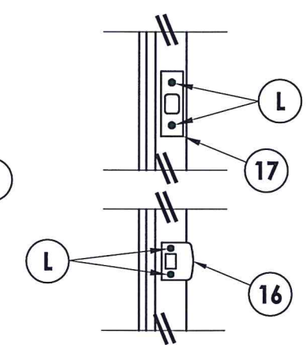

STRIKE PLATE DETAIL

STATE OF TEXAS
LYNDON F. SCHMIDT
104123
LICENSED
PROFESSIONAL ENGINEER

Documents Prepared By: Lyndon F. Schmidt, P.E.
TEXAS P.E. #104123

RW BUILDING CONSULTANTS, INC.
P.O. Box 230 Valrico FL. 33595
Phone No.: 813.659.9197

CERTIFICATE OF REGISTRATION # F-11852

PRODUCT: TRINITY GLASS INT'L

PART OR ASSEMBLY: FRAME ANCHORING

NO.	DATE	REVISIONS	BY

DATE: 3/25/21
SCALE: N.T.S.
DWG. BY: RW
CHK. BY: LFS
DRAWING NO.: TX-5168
SHEET 8 OF 10

© 2021 R.W. BUILDING CONSULTANTS INC.

Z:\Clients\Trinity Glass PERMANENT\B - Texas Dept of Ins\DR-XXX 8-0 OP FG - IMP\C - Drawings\TX-5166-68.dwg

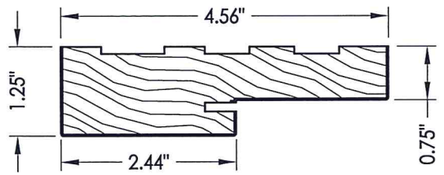

1 **HEAD & JAMBS**
FINGER JOINT PINE

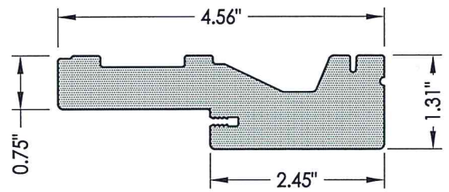

2 **HEAD & JAMBS**
PVC

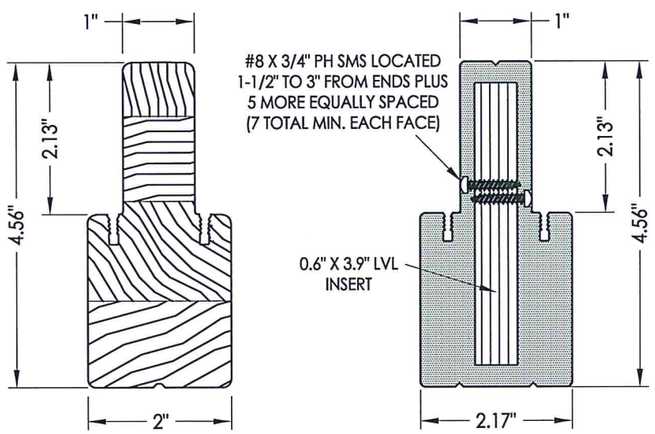

4 **INTEGRAL MULLION**
PINE

5 **INTEGRAL MULLION**
PVC/LVL

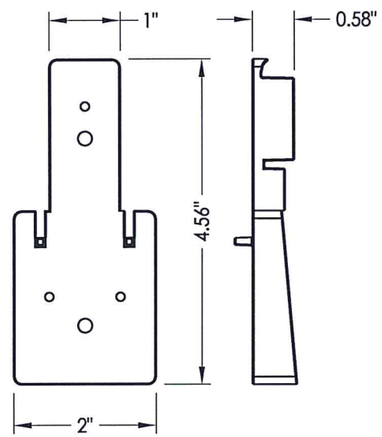

6 **INTEGRAL MULLION BASE KIT**
Optional

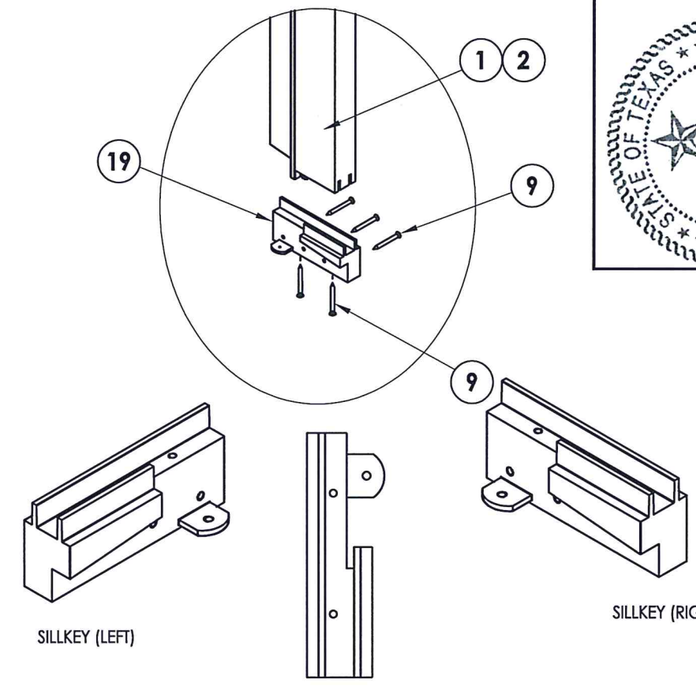

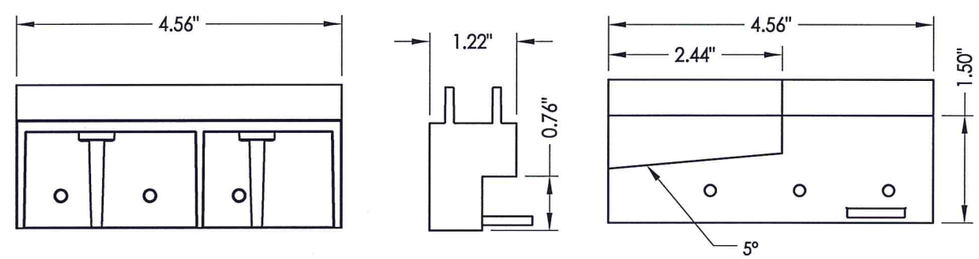

19 **SILLKEY DETAILS**
Optional

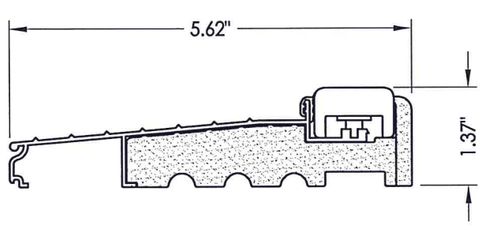

31 **INSWING THRESHOLD**

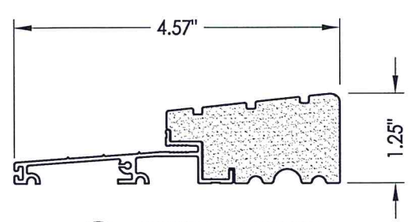

33 **OUTSWING THRESHOLD**
High-dam

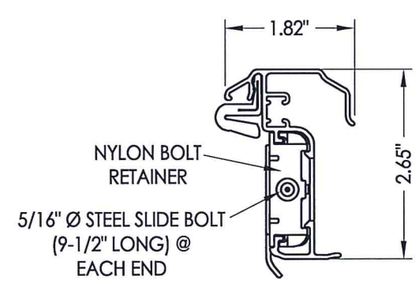

53 **ULTIMATE HURRICANE ASTRAGAL**
Endura Products

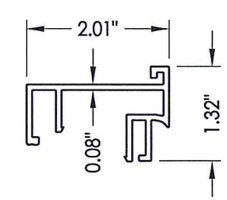

32 **SIDELITE SPACER**
Inswing

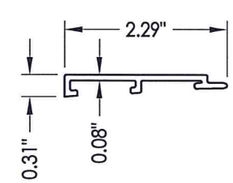

34 **SIDELITE SPACER**
Outswing

STATE OF TEXAS
LYNDON F. SCHMIDT
104123
LICENSED
PROFESSIONAL ENGINEER

Documents Prepared By: Lyndon F. Schmidt, P.E.
TEXAS P.E. #104123

RW BUILDING CONSULTANTS, INC.
P.O. Box 230 Valrico FL. 33595
Phone No.: 813.659.9197

CERTIFICATE OF REGISTRATION # F-11852

PRODUCT: TRINITY GLASS INT'L

PART OR ASSEMBLY: COMPONENTS

NO.	DATE	BY

REVISIONS

DATE: 3/25/21
SCALE: N.T.S.
DWG. BY: RW
CHK. BY: LFS
DRAWING NO.: TX-5168
SHEET 9 OF 10

© 2021 R.W. BUILDING CONSULTANTS INC.

Z:\Clients\Trinity Glass PERMANENT\B - Texas Dept of Ins\DR-XXX 8-0 OP FG - IMP\C - Drawings\TX-5166-68.dwg

BILL OF MATERIALS

ITEM #	DESCRIPTION	MATERIAL
A	2X FRAMING (SG >= 0.42)	WOOD
C	1/4" MAX. SHIM SPACE	-
D	1/4" FH DeWALT OR ITW CONCRETE SCREW (1-3/4" MIN. EMBEDMENT)	STEEL
K	#10 FH WOOD SCREW (1-3/4" MIN. EMBEDMENT)	STEEL
L	#10 X 2-1/2" PFH WS (1.15" MIN. EMBEDMENT)	STEEL
1	HEAD & JAMB (FINGER JOINT PINE: SG >= 0.42)	WOOD
2	HEAD & JAMB	PVC
4	INTEGRAL MULLION (PINE: SG >= 0.42)	WOOD
5	INTEGRAL MULLION (PVC)	PVC
6	INTEGRAL MULLION BASE KIT	ABS
7	WEATHERSTRIP	FOAM
8	DOOR BOTTOM SWEEP	PVC
9	#6 X 1-1/4 PFH DRYWALL SCREW	STEEL
11	#9 X 2-1/4" PFH WOOD SCREW	STEEL
16	LATCH STRIKE PLATE	STEEL
17	DEADBOLT STRIKE PLATE	STEEL
18	DEADBOLT SUB-STRIKE PLATE	STEEL
19	SILLKEY	ABS
24	#9 X 3/4" PFH WS	STEEL
25	#9 X 1" PFH WS	STEEL
26	#10 X 2" PFH WS	STEEL
27	#8 X 2-1/2" PFH WOOD SCREW	STEEL
28	#10 X 3" PFH WOOD SCREW	STEEL
29	4" X 4" HINGE	STEEL
31	INSWING THRESHOLD ALUMINUM w/ COMPOSITE SUBSTRATE	ALUM/ COMP
32	SIDELITE SPACER - INSWING	PVC
33	OUTSWING HIGH - DAM THRESHOLD ALUMINUM w/ COMPOSITE SUBSTRATE	ALUM/ COMP
34	SIDELITE SPACER - OUTSWING	PVC
40	DOOR PANEL	-
50	SIDELITE PANEL	-
52	#8 X 1" FH WOOD SCREW	STEEL
53	ENDURA ULTIMATE HURRICANE ASTRAGAL	ALUM
54	ASTRAGAL STRIKE PLATE	STEEL

CONCRETE ANCHOR NOTES:

1. *Concrete anchor locations at the corners may be adjusted to maintain the min. edge distance to mortar joints.*
2. *Concrete anchor locations noted as "MAX. ON CENTER" must be adjusted to maintain the min. edge distance to mortar joints, additional concrete anchors may be required to ensure the "MAX. ON CENTER" dimension are not exceeded.*
3. *Concrete anchor table:*

ANCHOR TYPE	ANCHOR SIZE	MIN. EMBEDMENT	MIN. CLEARANCE TO MASONRY EDGE	MIN. CLEARANCE TO ADJACENT ANCHOR
ITW TAPCON®	1/4"	1-3/4"	2"	4"
DeWALT ULTRACON+®	1/4"	1-3/4"	1"	4"

WOOD SCREW INSTALLATION NOTES:

1. *Maintain a minimum 5/8" edge distance, 1" end distance, & 1" o.c. spacing of wood screws to prevent the splitting of wood.*

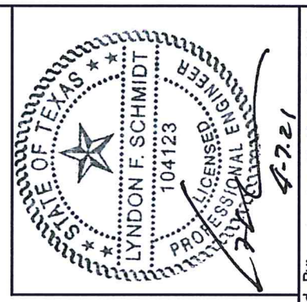

Documents Prepared By: Lyndon F. Schmidt, P.E.
TEXAS P.E. #104123
RW BUILDING CONSULTANTS, INC.
P.O. Box 230 Valrico FL. 33595
Phone No.: 813.659.9197
CERTIFICATE OF REGISTRATION # F-11852

PRODUCT: TRINITY GLASS INT'L

PART OR ASSEMBLY: BILL OF MATERIALS

REVISIONS

NO.	DATE	BY

DATE: 3/25/21
SCALE: N.T.S.
DWG. BY: RW
CHK. BY: LFS
DRAWING NO.: TX-5168
SHEET 10 OF 10

© 2021 R.W. BUILDING CONSULTANTS INC.

Z:\Clients\Trinity Glass PERMANENT\B - Texas Dept of Ins\DR-XXX 8-0 OP FG - IMP\C - Drawings\TX-5166-68.dwg