Alside BECAUSE LIFE IS FOR LIVING®

3773 STATE ROAD
CUYAHOGA FALLS, OH 44223

MODEL 0602
HORIZONTAL SLIDER
"NON-IMPACT"

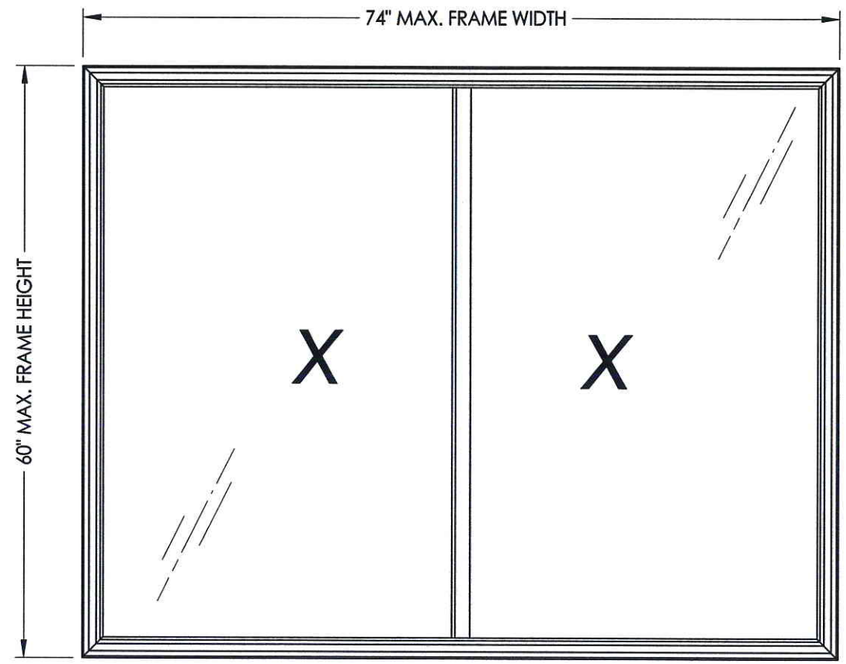

ALSO DISTRIBUTED UNDER THE FOLLOWING TRADE NAMES:

ASSOCIATED MATERIALS, INC.
GENTEK BUILDING PRODUCTS
REVERE BUILDING PRODUCTS

EVALUATED FOR USE IN THE STATE OF TEXAS

The Alside Horizontal Slider described herein complies with the 2006 International Residential Code (IRC), Sections R301 & R613 and the 2006 International Building Code (IBC), Sections 1405.12, 1609, 1714.5, 2403 and 2404 (including Texas revisions) subject to the following conditions:

1. Anchors shall be as listed and spaced as shown in the details. Anchor embedment to base material shall be beyond wall dressing or stucco.
2. When used in areas requiring wind-borne debris protection this product is required to be protected with an impact resistant covering that complies with Section R301.2.1.2 of the IRC and Section 1609.1.2 of the IBC.
3. Allowable design pressure requirements must be equal to or less than the design pressure rating shown in the design pressure chart, sheet 1 of this drawing.
4. Conditions not covered by this drawing are subject to further engineering analysis.

TABLE OF CONTENTS

SHEET#	DESCRIPTION
1	Typical elevations, design pressures & general notes
2	Vertical & horizontal cross sections & frame anchoring
3	Bill of materials, glazing detail and components

OVERALL FRAME DIMENSION	OVERALL DAY LIGHT DIMENSION	GLASS TYPE	DESIGN PRESSURE (PSF)	
			POS.	NEG.
72.00" X 56.00"	31.63" X 47.63"	G1	+30.0	-30.0
74.00" x 50.00"	32.44" X 41.50"		+35.0	-35.0
60.00" x 60.00"	25.63" X 51.94"	G2	+45.0	-45.0

NOTE: Max. frame height & width occur on separate units.

STATE OF TEXAS LYNDON F. SCHMIDT 104123 LICENSED PROFESSIONAL ENGINEER 7-22-14

Documents Prepared By: Lyndon F. Schmidt, P.E.
TEXAS P.E. #104123
RW BUILDING CONSULTANTS, INC.
P.O. Box 230 Valrico FL. 33595
Phone No.: 813.659.9197
TEXAS BOARD OF PROFESSIONAL ENGINEERS
CERTIFICATE OF REGISTRATION # F-11852

PRODUCT: HORIZONTAL SLIDER

PART OR ASSEMBLY: TYPICAL ELEVATION, DESIGN PRESSURES & GENERAL NOTES

REVISIONS

NO.	DATE		BY
2	3/21/13	UPDATED FRAME SIZES/D.P.	LFS
1	2/8/11	REVISED D.P. TABLE	JK

DATE: 05/24/10
SCALE: N.T.S.
DWG. BY: JK
CHK. BY: LFS
DRAWING NO.: TX-4099
SHEET 1 OF 3

© 2010 R.W. BUILDING CONSULTANTS INC.

\\sbs2k3\RWBC\A - Projects\Project Folders\proj 1501 - 1600\PF 1561\D. RWBC Drawings\TX-4099.dwg, TX-4099

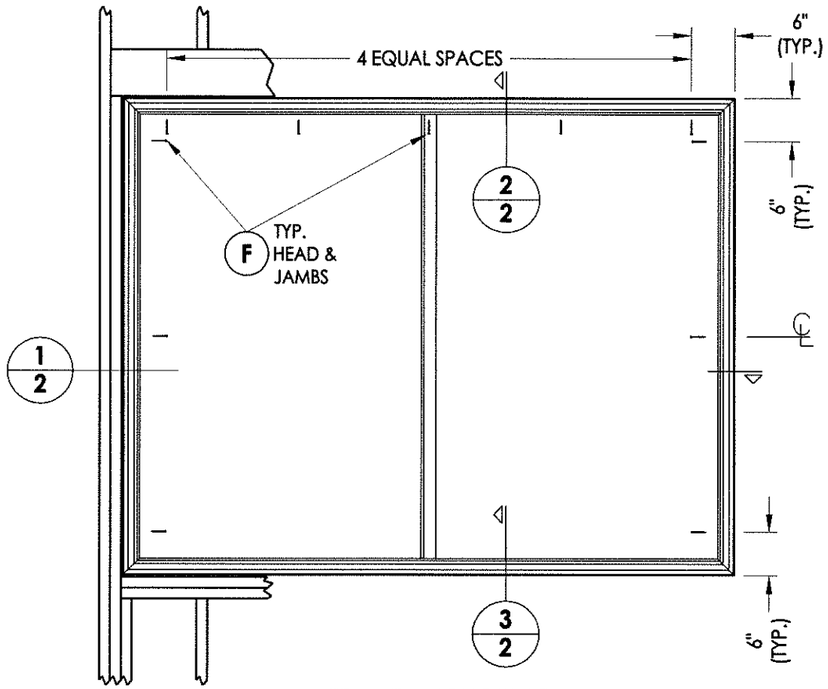

FRAME ANCHORING
Stud Construction

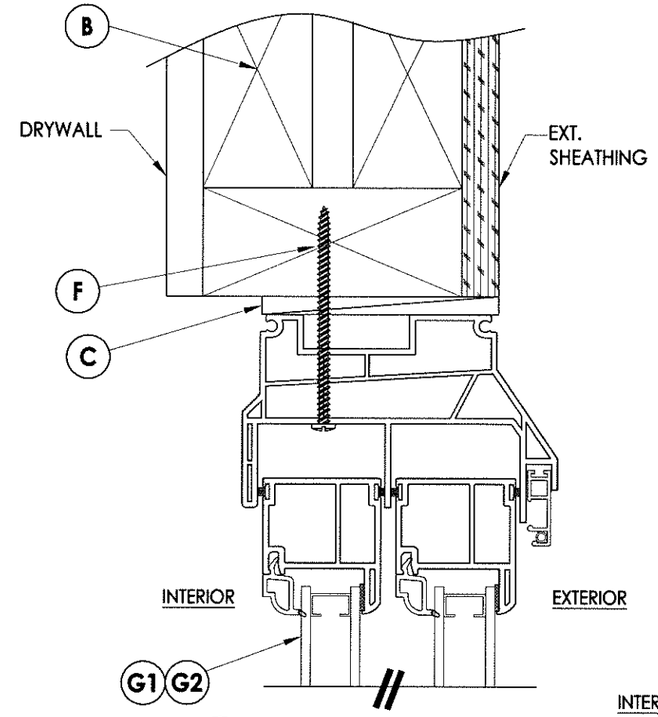

2/2 VERTICAL CROSS SECTION

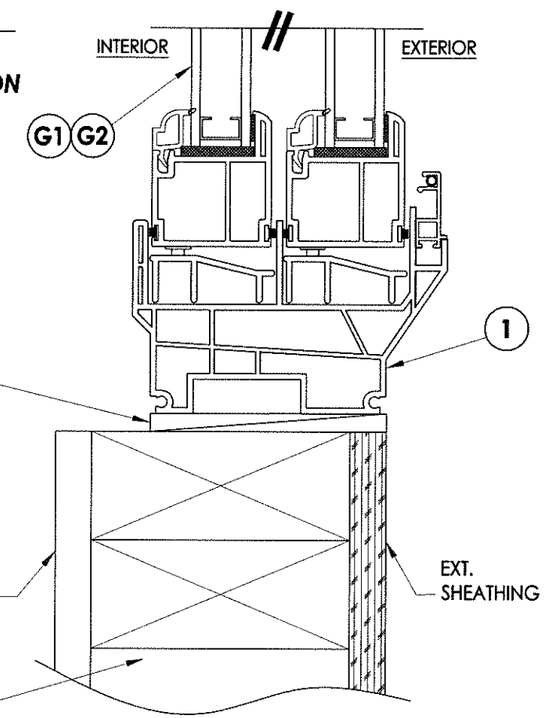

3/2 VERTICAL CROSS SECTION

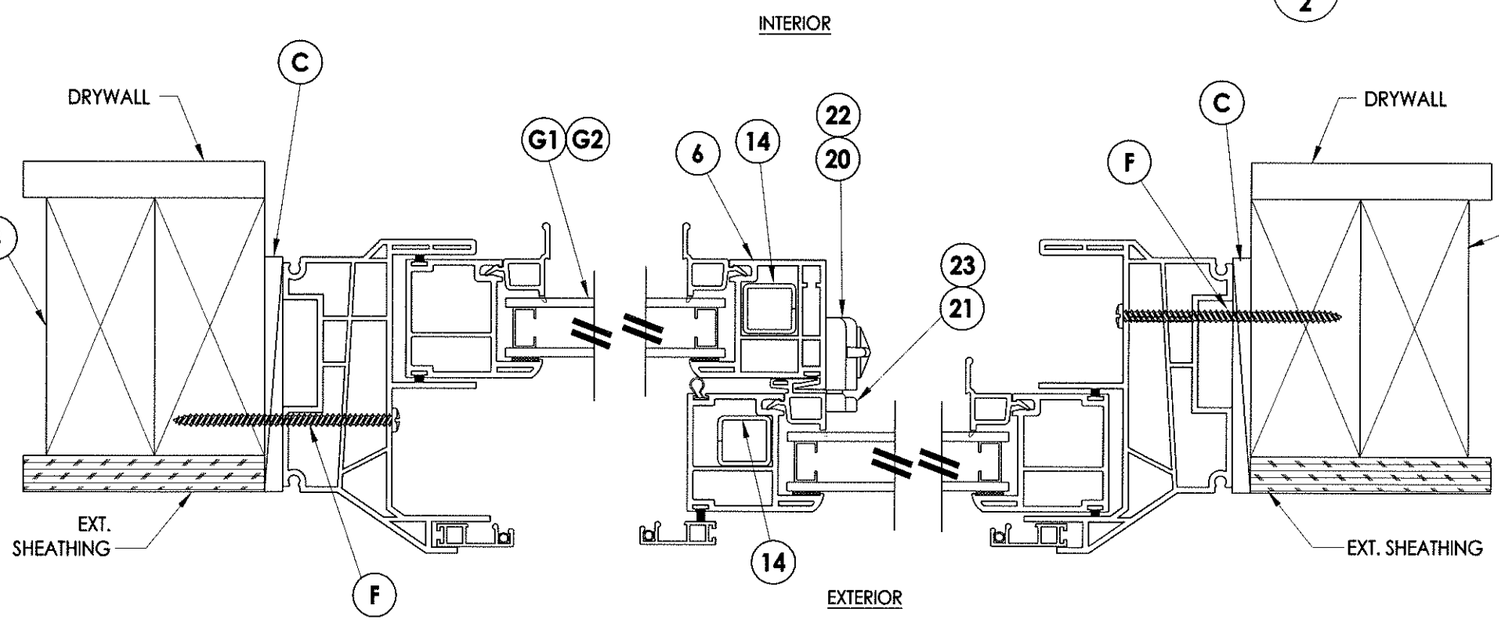

1/2 HORIZONTAL CROSS SECTION

STATE OF TEXAS
LYNDON F. SCHMIDT
104123
LICENSED
PROFESSIONAL ENGINEER
1.22.14

Documents Prepared By: Lyndon F. Schmidt, P.E.
TEXAS P.E. #104123

RW BUILDING CONSULTANTS, INC.
P.O. Box 230 Valrico FL. 33595
Phone No.: 813.659.9197

TEXAS BOARD OF PROFESSIONAL ENGINEERS
CERTIFICATE OF REGISTRATION # F-11852

PRODUCT: HORIZONTAL SLIDER

PART OR ASSEMBLY: VERTICAL & HORIZONTAL CROSS SECTIONS & FRAME ANCHORING

REVISIONS

NO.	DATE		BY
2	3/21/13	UPDATED FRAME SIZES/D.P.	LFS
1	2/8/11	REVISED D.P. TABLE	JK

DATE: 05/24/10
SCALE: N.T.S.
DWG. BY: JK
CHK. BY: LFS
DRAWING NO.: TX-4099
SHEET 2 OF 3

© 2010 R.W. BUILDING CONSULTANTS INC.

\\sbs2k3\RWBC\A - Projects\Project Folders\proj 1501 - 1600\PF 1561\D. RWBC Drawings\TX-4099.dwg, 1-2

BILL OF MATERIALS

ITEM	DESCRIPTION	MATERIAL
B	2X FRAMING SG >= 0.42	WOOD
C	MAX. 3/16" SHIM SPACE	-
F	#10 X 3" PPH SMS	STEEL
1	EXTRUDED VINYL FRAME *	RIGID PVC
3	EXTRUDED VINYL SASH *	RIGID PVC
5	EXTRUDED VINYL MEETING STILE *	RIGID PVC
7	EXTRUDED VINYL GLAZING BEAD "A" *	RIGID PVC
8	EXTRUDED VINYL GLAZING BEAD "C" *	RIGID PVC
14	LOCK REINFORCEMENT (UY0088)	STEEL
17	"U" SHAPED METAL SPACER	STEEL
18	SETTING BLOCK	-
19	DOUBLE SIDED ADHESIVE GLAZING TAPE	-
20	SWEEP LOCK (ASHLAND # L3100CL11R)	STEEL
21	KEEPER	STEEL
22	#8 x 1" PFH SCREW	STEEL
23	#6 x 1" PFH SCREW	STEEL
32	EXTRUDED VINYL GLAZING BEAD "B" *	RIGID PVC

*THE APPROVED WHITE RIGID PVC EXTERIOR EXTRUSIONS FOR WINDOWS ARE TO BE PRODUCED BY EXTRUDERS LICENSEES IN "AAMA CERTIFICATION PROGRAMS FOR RIGID PVC EXTRUSIONS."

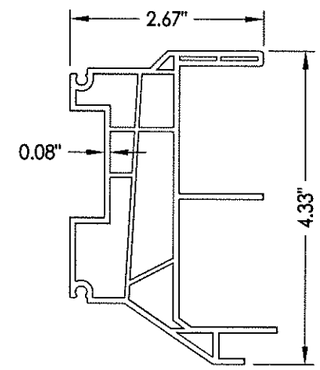

1 FRAME

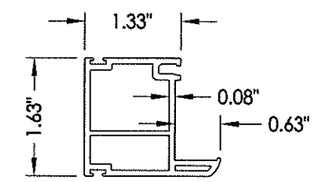

3 SASH

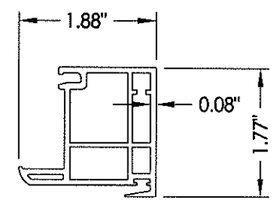

5 MEETING STILE

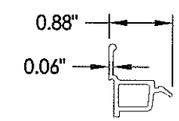

7 GLAZING BEAD "A"

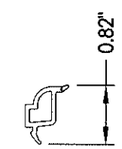

8 GLAZING BEAD "C"

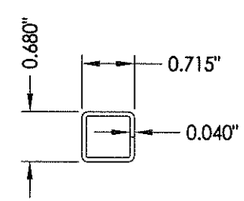

14 LOCK Reinforcement

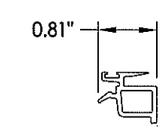

32 GLAZING BEAD "B" MEETING STILE

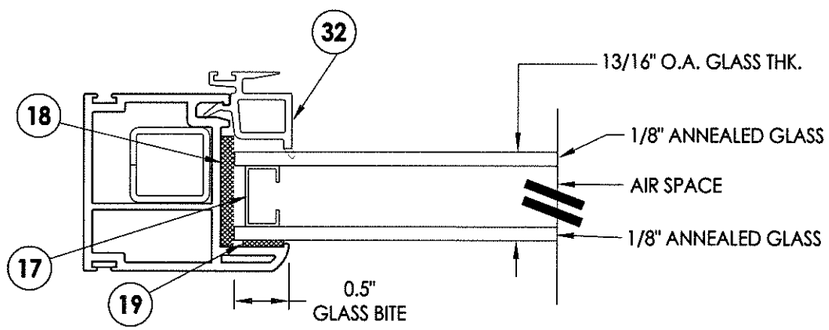

G1 GLAZING DETAIL

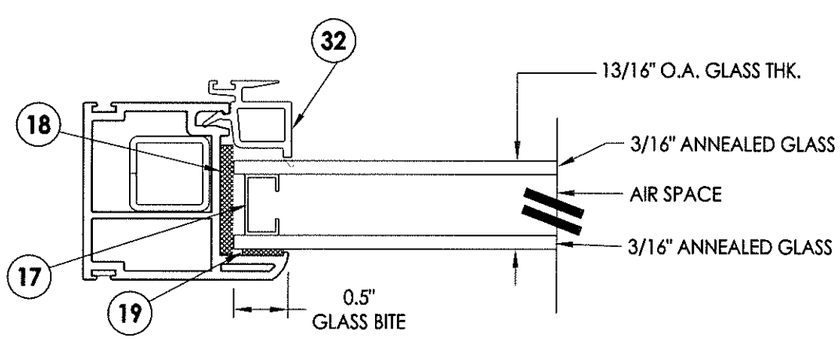

G2 GLAZING DETAIL

STATE OF TEXAS
LYNDON F. SCHMIDT
104123
LICENSED
PROFESSIONAL ENGINEER
1.22.14

Documents Prepared By: Lyndon F. Schmidt, P.E.
TEXAS P.E. #104123

RW BUILDING CONSULTANTS, INC.
P.O. Box 230 Valrico FL. 33595
Phone No.: 813.659.9197

TEXAS BOARD OF PROFESSIONAL ENGINEERS
CERTIFICATE OF REGISTRATION # F-11852

PRODUCT: HORIZONTAL SLIDER

PART OR ASSEMBLY: BILL OF MATERIALS, GLAZING DETAILS & COMPONENTS

REVISIONS

NO.	DATE		BY
2	3/21/13	UPDATED FRAME SIZES/D.P.	LFS
1	2/8/11	REVISED D.P. TABLE	JK

DATE: 05/24/10
SCALE: N.T.S.
DWG. BY: JK
CHK. BY: LFS
DRAWING NO.: TX-4099
SHEET 3 OF 3

© 2010 R.W. BUILDING CONSULTANTS INC.

\\sbs2k3\RWBCA - Projects\Project Folders\proj 1501 - 1600\PF 1561\D. RWBC Drawings\TX-4099.dwg, 1-3