ASSOCIATED MATERIALS
INCORPORATED

3773 STATE ROAD
CUYAHOGA FALLS, OH 44223

MODEL 0201
DOUBLE HUNG WINDOW
"NON-IMPACT"

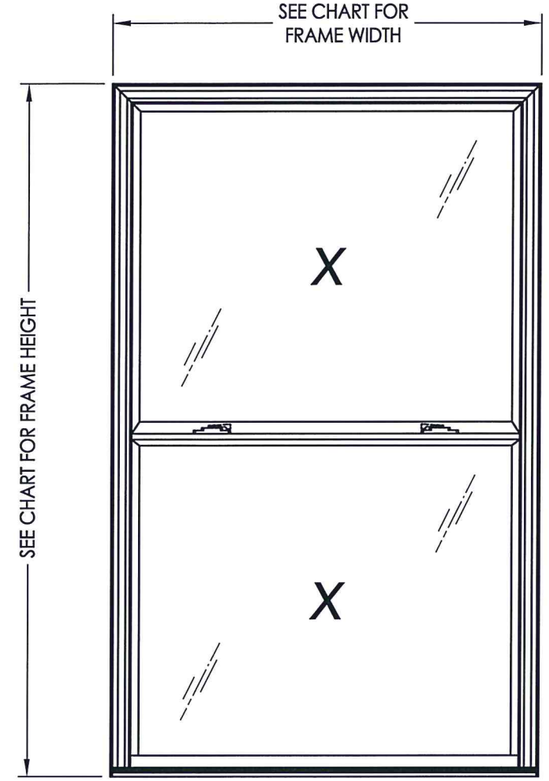

EVALUATED FOR USE IN THE STATE OF TEXAS

The Double Hung Window described herein complies with the 2006 International Residential Code (IRC), Sections R301 & R613 and the 2006 International Building Code (IBC), Sections 1405.12, 1609, 1714.5, 2403 and 2404 (including Texas revisions) subject to the following conditions:

1. Anchors shall be as listed and spaced as shown in the details. Anchor embedment to base material shall be beyond wall dressing or stucco.
2. When used in areas requiring wind-borne debris protection this product is required to be protected with an impact resistant covering that complies with Section R301.2.1.2 of the IRC and Section 1609.1.2 of the IBC.
3. Allowable design pressure requirements must be equal to or less than the design pressure rating shown in the design pressure chart, sheet 1 of this drawing.
4. Conditions not covered by this drawing are subject to further engineering analysis.

OVERALL FRAME DIMENSION	OVERALL D.L.O. (TOP)	OVERALL D.L.O. (BOTTOM)	GLASS TYPE	DESIGN PRESSURE (PSF)	
				POSITIVE	NEGATIVE
52.00" x 96.00"	46.05" x 43.67"	47.05" x 44.72"	G1	+25.0	-25.0
52.00" x 62.00"	46.05" x 26.67"	47.05" x 27.72"	G1	+50.0	-50.0
44.00" x 75.00"	38.05" x 33.17"	39.05" x 34.22"	G1	+35.0	-35.0
44.00" x 60.00"	38.05" x 25.67"	39.05" x 26.72"	G1	+45.0	-45.0
36.00" x 78.00"	30.05" x 34.67"	31.05" x 35.72"	G1	+35.0	-35.0
36.00" x 72.00"	30.05" x 31.67"	31.05" x 32.72"	G1	+45.0	-45.0
36.00" x 60.00"	30.05" x 25.67"	31.05" x 26.72"	G1	+40.0	-40.0

TABLE OF CONTENTS

SHEET#	DESCRIPTION
1	Typical elevations, design pressures & general notes
2	Vertical & horizontal cross sections & frame anchoring
3	Bill of materials, glazing detail and components

STATE OF TEXAS
LYNDON F. SCHMIDT
104123
LICENSED PROFESSIONAL ENGINEER
5-26-15

Documents Prepared By: Lyndon F. Schmidt, P.E.
TEXAS P.E. #104123

RW BUILDING CONSULTANTS, INC.
P.O. Box 230 Valrico FL. 33595
Phone No.: 813.659.9197

TEXAS BOARD OF PROFESSIONAL ENGINEERS
CERTIFICATE OF REGISTRATION # F-11852

PRODUCT: DOUBLE HUNG WINDOW

PART OR ASSEMBLY: TYPICAL ELEVATION, DESIGN PRESSURES & GENERAL NOTES

REVISIONS

NO.	DATE	ADDED FRAME SIZES	BY
1	5/14/15		LFS

DATE: 04/11/12
SCALE: N.T.S.
DWG. BY: JK
CHK. BY: LFS
DRAWING NO.: TX-4113
SHEET 1 OF 3

© 2012 R.W. BUILDING CONSULTANTS INC.

R:\Clients\Associated PERMANENT\Texas Dept of Ins\Double Hung\WIN 547 0201 Replacement Window\C - Drawings\Current\TX-4113.DWG, TX-4113

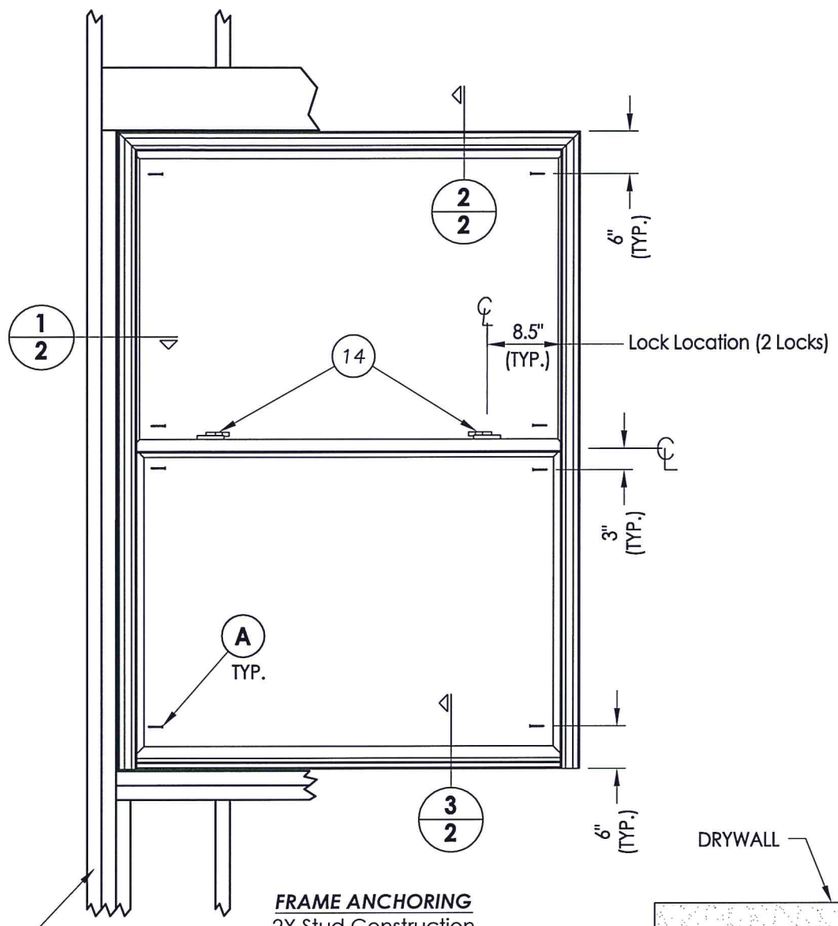

FRAME ANCHORING
2X Stud Construction

2x framing to be designed by the engineer or architect of record based on wind loads and the cladding being used.

NOTE:

1. Anchors located above the meeting rail are in the interior track and anchors located below the meeting rail are in the exterior track.

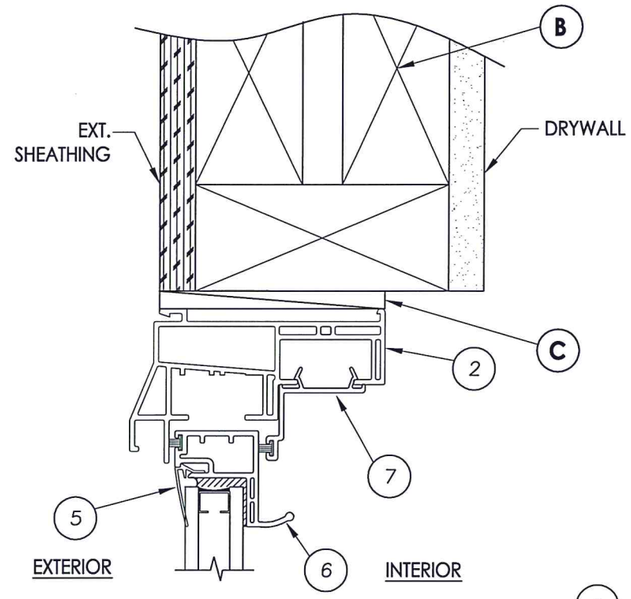

2/2 VERTICAL CROSS SECTION

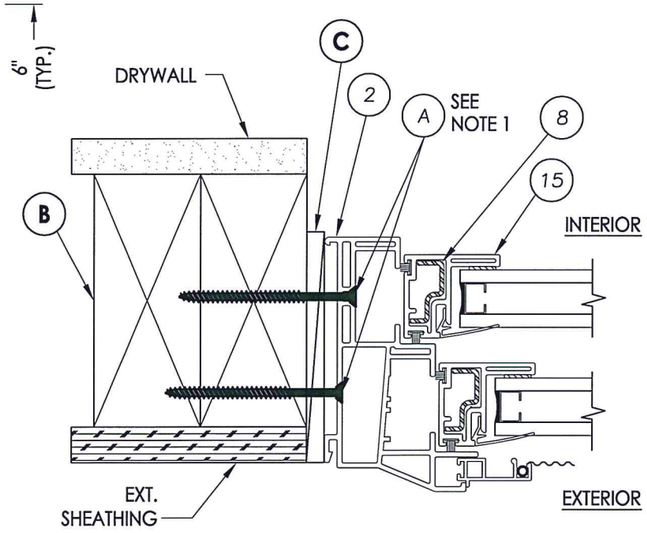

1/2 HORIZONTAL CROSS SECTION

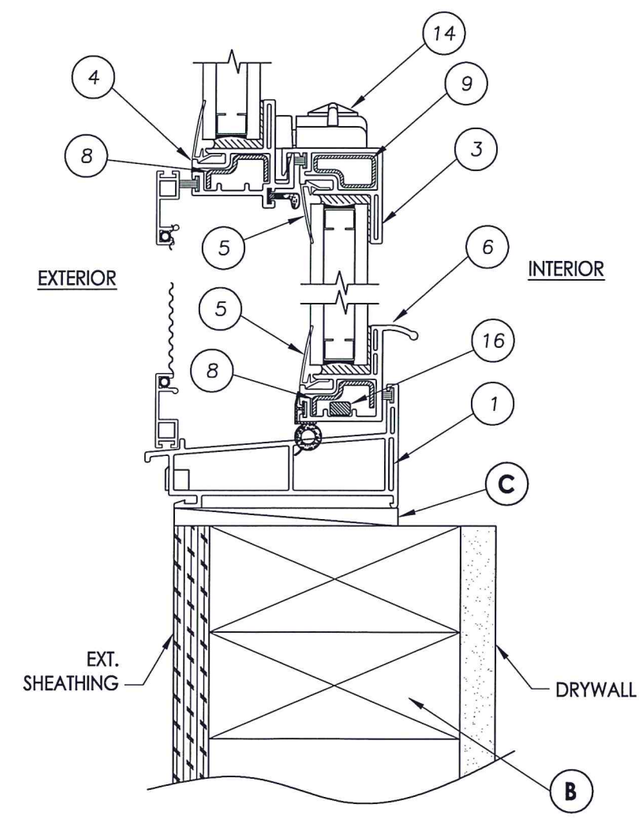

3/2 VERTICAL CROSS SECTION

STATE OF TEXAS
LYNDON F. SCHMIDT
104123
LICENSED
PROFESSIONAL ENGINEER
5.26.15

Documents Prepared By: Lyndon F. Schmidt, P.E.
TEXAS P.E. #104123

RW BUILDING CONSULTANTS, INC.
P.O. Box 230 Valrico FL. 33595
Phone No.: 813.659.9197

TEXAS BOARD OF PROFESSIONAL ENGINEERS
CERTIFICATE OF REGISTRATION # F-11852

PRODUCT: DOUBLE HUNG WINDOW

PART OR ASSEMBLY: VERTICAL & HORIZONTAL CROSS SECTIONS & FRAME ANCHORING

REVISIONS

NO.	DATE		BY
1	5/26/15	ADDED FRAME SIZES	LFS

DATE: 04/11/12
SCALE: N.T.S.
DWG. BY: JK
CHK. BY: LFS
DRAWING NO.: TX-4113
SHEET 2 OF 3

© 2012 R.W. BUILDING CONSULTANTS INC.

R:\Clients\Associated PERMANENT\Texas Dept of Ins\Double Hung\WIN 547 0201 Replacement Window\C - Drawings\Current\TX-4113.DWG, 2.1

BILL OF MATERIALS		
ITEM	DESCRIPTION	
A	#8 x 2-1/2" PFH WS	STEEL
B	2X FRAMING (G >= 0.42)	WOOD
C	1/4" MAX SHIM SPACE	WOOD
1	EXTRUDED VINYL SILL *	RIGID PVC
2	EXTRUDED VINYL HEAD & JAMB*	RIGID PVC
3	EXTRUDED VINYL LOCK RAIL *	RIGID PVC
4	EXTRUDED VINYL KEEPER RAIL *	RIGID PVC
5	EXTRUDED VINYL GLAZING BEAD *	PVC
6	EXTRUDED VINYL HANDLE RAIL *	RIGID PVC
7	EXTRUDED VINYL SASH STOP *	RIGID PVC
8	SASH STILE AND RAIL REINFORCEMENT	STEEL
9	LOCK RAIL REINFORCEMENT	STEEL
11	GLAZING TAPE (1/16" X 3/8")	-
12	STEEL INTERCEPT SPACER	STEEL
13	GLAZING SHIM 1/8" THICK	BUTYL
14	METAL BUTTON CAM LOCK (ASHLAND)	-
15	SASH STILE	STEEL
16	PIVOTTRUE PIVOT BAR	-

* THE APPROVED WHITE RIGID PVC EXTERIOR EXTRUSIONS FOR WINDOWS ARE TO BE PRODUCED BY EXTRUDERS LICENSEES IN "AAMA CERTIFICATION PROGRAMS FOR RIGID PVC EXTRUSIONS".

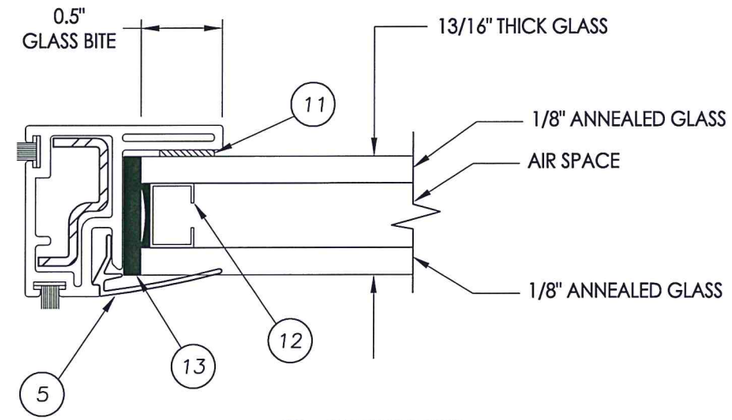

G1 GLAZING DETAIL

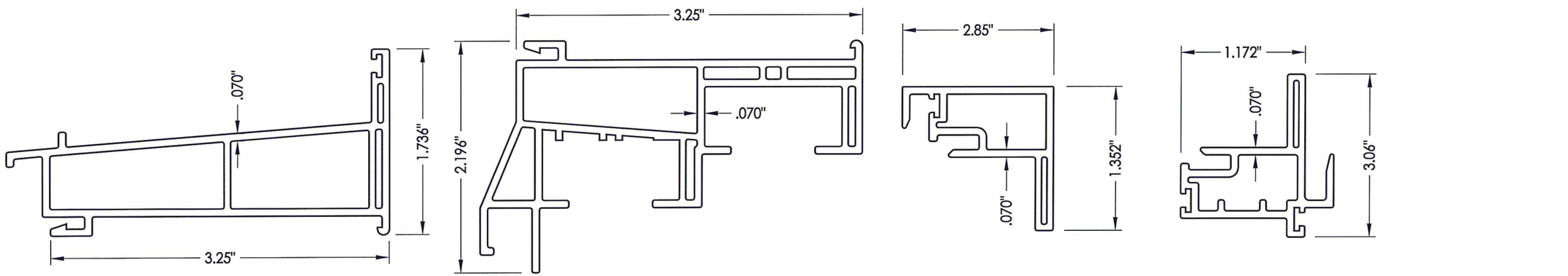

1 SILL

2 HEAD & JAMB

3 LOCK RAIL

4 KEEPER RAIL

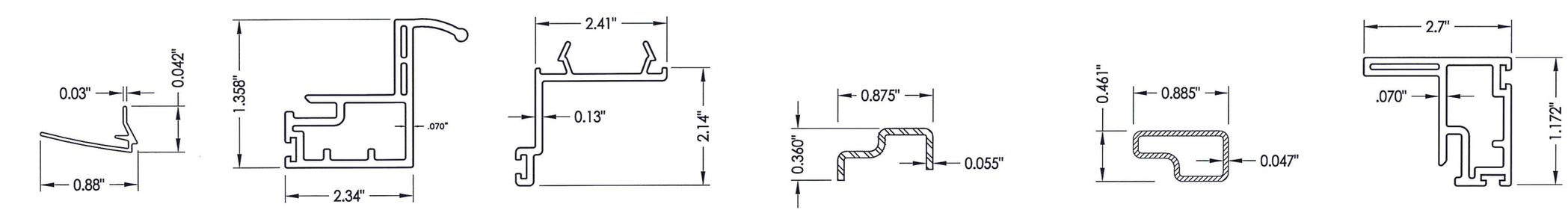

5 GLAZING BEAD

6 HANDLE RAIL

7 SASH STOP

8 SASH STILE & RAIL REINFORCEMENT

9 LOCK RAIL REINFORCEMENT

15 SASH STILE

STATE OF TEXAS
LYNDON F. SCHMIDT
104123
LICENSED PROFESSIONAL ENGINEER
5-26-15

Documents Prepared By: Lyndon F. Schmidt, P.E.
TEXAS P.E. #104123
RW BUILDING CONSULTANTS, INC.
P.O. Box 230 Valrico FL. 33595
Phone No.: 813.659.9197
TEXAS BOARD OF PROFESSIONAL ENGINEERS
CERTIFICATE OF REGISTRATION # F-11852

PRODUCT: DOUBLE HUNG WINDOW

PART OR ASSEMBLY: BILL OF MATERIALS, GLAZING DETAIL & COMPONENTS

NO.	DATE	REVISIONS	BY
1	5/26/15	ADDED FRAME SIZES	LFS

DATE: 04/11/12
SCALE: N.T.S.
DWG. BY: JK
CHK. BY: LFS
DRAWING NO.: TX-4113
SHEET 3 OF 3

© 2012 R.W. BUILDING CONSULTANTS INC.

R:\Clients\Associated PERMANENT\Texas Dept of Ins\Double Hung\WIN 547 0201 Replacement Window\C - Drawings\Current\TX-4113.DWG, 3.1