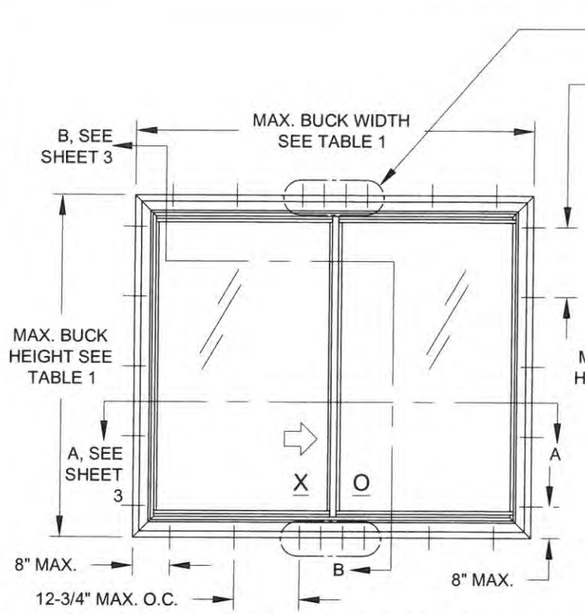

ELEVATION FOR TYP. EQUAL LEG/BOX & FLANGE FRAME, XO CONFIGURATION, OX SIMILAR

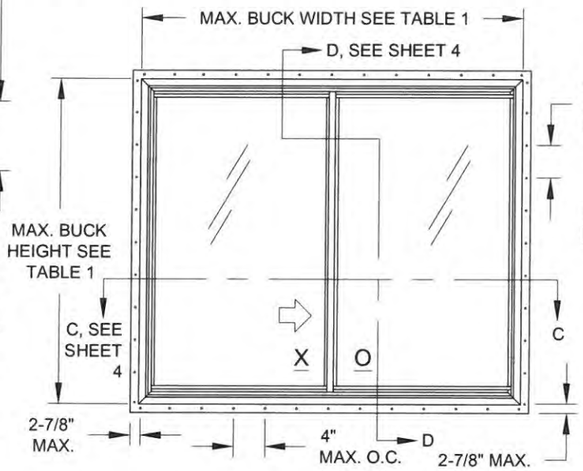

ELEVATION FOR TYP. FIN OR J-CHANNEL FRAME, XO CONFIGURATION, OX & XOX SIMILAR

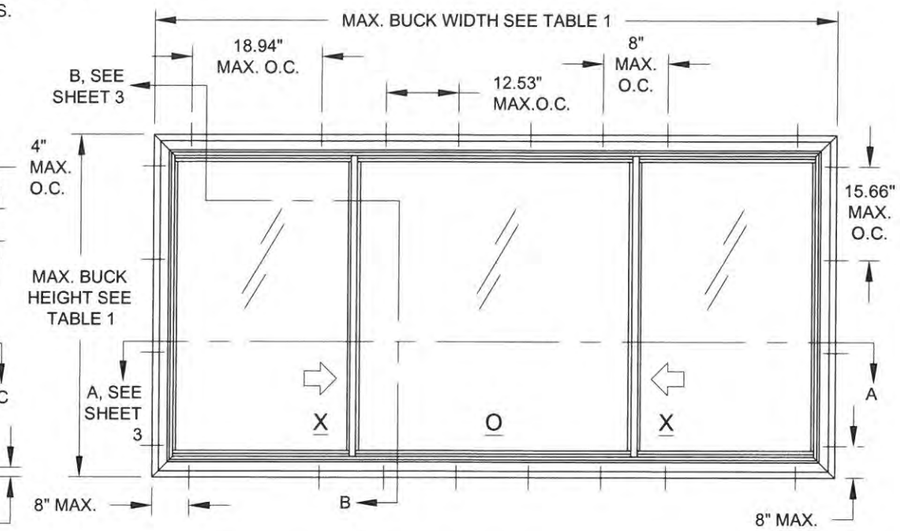

ELEVATION FOR TYP. EQUAL LEG/BOX & FLANGE FRAME, XOX CONFIGURATION

MAX. SASH WIDTH = 30.36"

MAX. FIXED LITE (BUCK WIDTH - [2 X SASH WIDTH]) = 59.28"

GENERAL NOTES: SERIES 5510 IMPACT RESISTANT, VINYL HORIZONTAL ROLLER

1) THIS PRODUCT HAS BEEN DESIGNED & TESTED TO COMPLY WITH THE REQUIREMENTS OF THE 2006 INTERNATIONAL BUILDING CODE FOR THE DESIGN PRESSURES LISTED.

2) ALL WOOD BUCKS LESS THAN 1-1/2" THICK ARE TO BE CONSIDERED 1X INSTALLATIONS. 1X WOOD BUCKS ARE OPTIONAL IF UNIT IS INSTALLED DIRECTLY TO SUBSTRATE. WOOD BUCKS DEPICTED AS 2X ARE 1-1/2" THICK OR GREATER. 1X AND 2X BUCKS (WHEN USED) SHALL BE DESIGNED TO PROPERLY TRANSFER LOADS TO THE STRUCTURE. WOOD BUCK DESIGN AND INSTALLATION IS THE RESPONSIBILITY OF THE ENGINEER, (EOR) OR ARCHITECT OF RECORD, (AOR).

3) ANCHOR EMBEDMENT TO BASE MATERIAL SHALL BE BEYOND WALL DRESSING OR STUCCO. USE ANCHORS OF SUFFICIENT EMBEDMENT. INSTALLATION ANCHORS SHOULD BE SEALED. OVERALL SEALING/FLASHING STRATEGY FOR WATER RESISTANCE OF INSTALLATION SHALL BE DONE BY OTHERS AND IS BEYOND THE SCOPE OF THESE INSTRUCTIONS.

4) MAX. 1/4" SHIMS ARE REQUIRED AT EACH ANCHOR LOCATION WHERE THE PRODUCT IS NOT FLUSH TO THE SUBSTRATE. USE SHIMS CAPABLE OF TRANSFERRING APPLIED LOADS. WOOD BUCKS, BY OTHERS, MUST BE SUFFICIENTLY ANCHORED TO RESIST LOADS IMPOSED ON THEM BY THE WINDOW.

5) THE ANCHORAGE METHODS SHOWN HAVE BEEN DESIGNED TO RESIST THE WINDLOADS CORRESPONDING TO THE REQUIRED DESIGN PRESSURE. THE 33-1/3% STRESS INCREASE HAS NOT BEEN USED IN THE DESIGN OF THIS PRODUCT. THE 1.6 LOAD DURATION FACTOR WAS USED FOR THE EVALUATION OF ANCHORS INTO WOOD. ANCHORS SHALL BE COATED OR CORROSION RESISTANT AS SPECIFIED IN THE 2006 TEXAS REVISIONS TO THE 2006 INTERNATIONAL BUILDING CODE.

TABLE 1:

Window Buck Size		Configuration	Reinf. Level	Design Pressure		Glass Types	Certification (CAR) Number
Width	Height			(+) psf	(-) psf		
75"	63"	XO/OX	R3	50.0	50.0	5-8	190-292, 1048
75"	63"	XO/OX	R4	60.0	60.0	5	190-290, 1074
75"	63"	XO/OX	R4	65.0	70.0	5-8	190-291, 1047
75"	72"	XO/OX	R4	50.0	50.0	5-8	190-289, 1046
120"	63"	XOX (1/4-1/2-1/4)	R3	45.0	45.0	5	190-297, 1053
92"	63"	XOX (1/3-1/3-1/3)					
120"	63"	XOX (1/4-1/2-1/4)	R3	50.0	50.0	5-8	190-298, 1054
92"	63"	XOX (1/3-1/3-1/3)					
120"	63"	XOX (1/4-1/2-1/4)	R4	65.0	65.0	7	190-295, 1051
92"	63"	XOX (1/3-1/3-1/3)					
120"	63"	XOX (1/4-1/2-1/4)	R4	65.0	70.0	7 & 8	190-296, 1052
92"	63"	XOX (1/3-1/3-1/3)					

SEE SHEET 2 FOR GLASS TYPES

PGT®
1070 TECHNOLOGY DRIVE
N. VENICE, FL 34275
(941)-480-1600

Title	VINYL HR WINDOW TDI (IMP.-RESIST.)	Date	3/17/15
Desc.	GENERAL NOTES & ELEVATIONS	Drawn By	J ROSOWSKI
Rev 1		Rev 1 Date	
Rev 2		Rev 2 Date	
Series	HR-5510	Scale	NTS
Sheet	1 OF 4	DWG No.	TDI-HR5510.1
Rev. No.			

STATE OF TEXAS
ANTHONY LYNN MILLER
106954
LICENSED
PROFESSIONAL ENGINEER

3/17/15

A. LYNN MILLER, P.E.
P.E.# 106954

TABLE 2: ANCHORS INSTALLED THROUGH FRAME

Anchor	Substrate	Min. Edge Distance	Min. Embedment
#10 SMS (steel, 18-8 S.S. or 410 S.S.) **Max. DP of 50.0**	P.T. Southern Pine (SG=0.55)	7/16"	1-3/8"
	Steel, A36	3/8"	0.050"
	Steel Stud, A653 Gr. 33	3/8"	0.0346" (20 Ga.)
	Aluminum, 6063-T5	3/8"	0.050"
#12 SMS (steel, 18-8 S.S. or 410 S.S.)	P.T. Southern Pine (SG=0.55)	9/16"	1-3/8"
	Steel, A36	3/8"	0.050"
	Steel Stud, A653 Gr. 33	3/8"	0.0346" (20 Ga.)
	Aluminum, 6063-T5	3/8"	0.063"
3/16" Ultracon (steel) **Max. DP of 50.0**	P.T. Southern Pine (SG=0.55)	7/16"	1-3/8"
	Concrete (min. 2.85 ksi)	1"	1-3/8"
	Ungrouted CMU, (ASTM C-90)	2-1/2"	1-1/4"
1/4" Ultracon (steel)	P.T. Southern Pine (SG=0.55)	1"	1-3/8"
	Concrete (min. 2.85 ksi)	1"	1-3/4"
	Ungrouted CMU, (ASTM C-90)	2-1/2"	1-1/4"
	Concrete (min. 2.85 ksi)	2-1/2"	1-3/4"
1/4" Crete-Flex (410 S.S.)	P.T. Southern Pine (SG=0.55)	1"	1-3/8"
	Concrete (min. 3.35 ksi)	1"	1-3/4"
	Ungrouted CMU, (ASTM C-90)	2-1/2"	1-1/4"
	Concrete (min. 3.35 ksi)	2-1/2"	1-3/4"
1/4" Aggre-Gator (18-8 S.S.)	Concrete (min. 3.275 ksi)	1-1/2"	1-3/8"
	P.T. Southern Pine (SG=0.55)	1"	1-3/8"
	Ungrouted CMU, (ASTM C-90)	2"	1-1/4"

TABLE 3: ANCHORS INSTALLED THROUGH INTEGRAL FIN

Anchor	Substrate	Min. Edge Distance	Min. Embedment
2-1/2" x .131" Common Nail **Max. DP of 50 psf**	P.T. Southern Pine (SG=.55)	9/16"	2-7/16"
2-1/2" x .131" Ring-shank Nail	P.T. Southern Pine (SG=.55)	9/16"	2-7/16"
2-1/2" x .145" Roofing Nail	P.T. Southern Pine (SG=.55)	9/16"	2-7/16"
#10 SMS (steel, 18-8 S.S. or 410 S.S.)	P.T. Southern Pine (SG=.55)	3/4"	1-3/8"
	Aluminum, 6063-T5	3/8"	0.050"
	Steel Stud, Gr. 33	3/8"	0.0346" (20 Ga.)
	Steel, A36	3/8"	0.050"

ANCHOR NOTES:

1) "UNGROUTED CMU" VALUES MAY BE USED FOR GROUTED CMU APPLICATIONS.

2) PANHEAD, FLATHEAD OR HEXHEAD ARE ACCEPTABLE.

3) ANCHOR LENGTH TO BE SO THAT A MIN. OF 3 THREADS EXTEND BEYOND THE METAL SUBSTRATE.

TABLE 4: REINFORCEMENT TYPES

Reinforcement		
Level	Vent (4 sides)	Meeting Rail
R3	B	E
R4	C	F

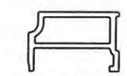

REINFORCENT TYPE B

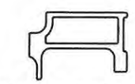

REINFORCENT TYPE C

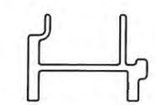

REINFORCENT TYPE E

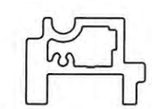

REINFORCENT TYPE F

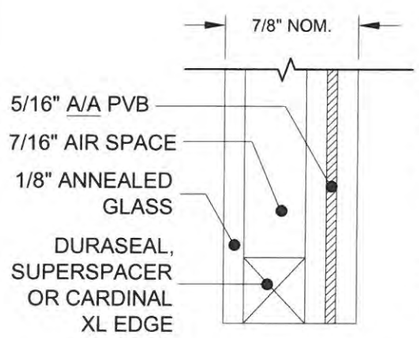

GLASS TYPE 5

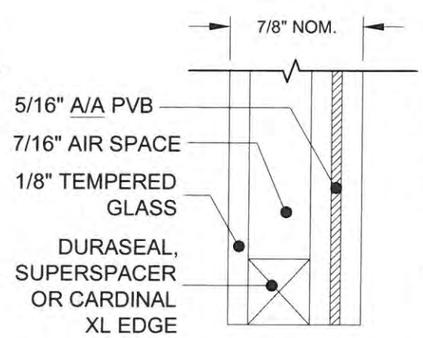

GLASS TYPE 6

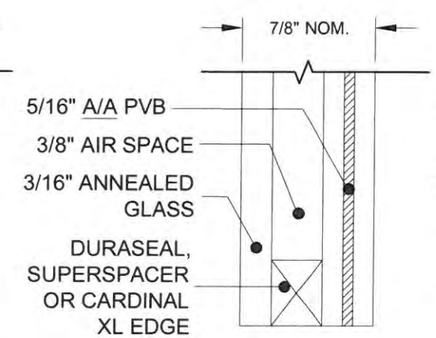

GLASS TYPE 7

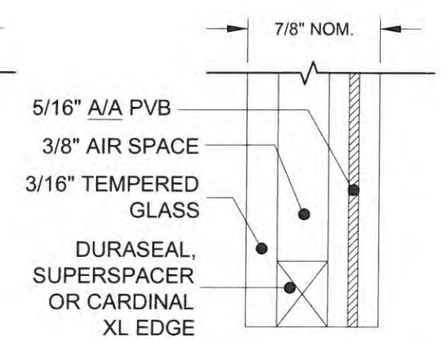

GLASS TYPE 8

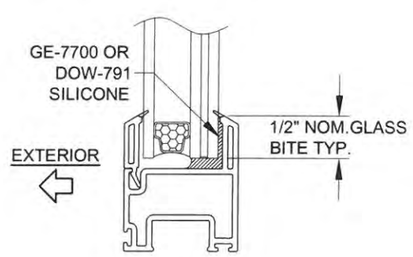

TYP. GLAZING DETAIL

PVB INTERLAYER MANUFACTURED BY DUPONT INC. (AKA KURARAY AMERICA, INC.)

PGT®
1070 TECHNOLOGY DRIVE
N. VENICE, FL 34275
(941)-480-1600

Title	VINYL HR WINDOW TDI (IMP.-RESIST.)	Date	3/17/15
Desc.	GLASS/ANCHOR OPTIONS	Drawn By	J ROSOWSKI
Rev 1		Rev 1 Date	
Rev 2		Rev 2 Date	
Series	HR-5510	Scale	NTS
Sheet	2 OF 4	DWG No.	TDI-HR5510.1
Rev. No.			

STATE OF TEXAS
ANTHONY LYNN MILLER
106954
LICENSED
PROFESSIONAL ENGINEER

3/17/15

A. LYNN MILLER, P.E.
P.E.# 106954

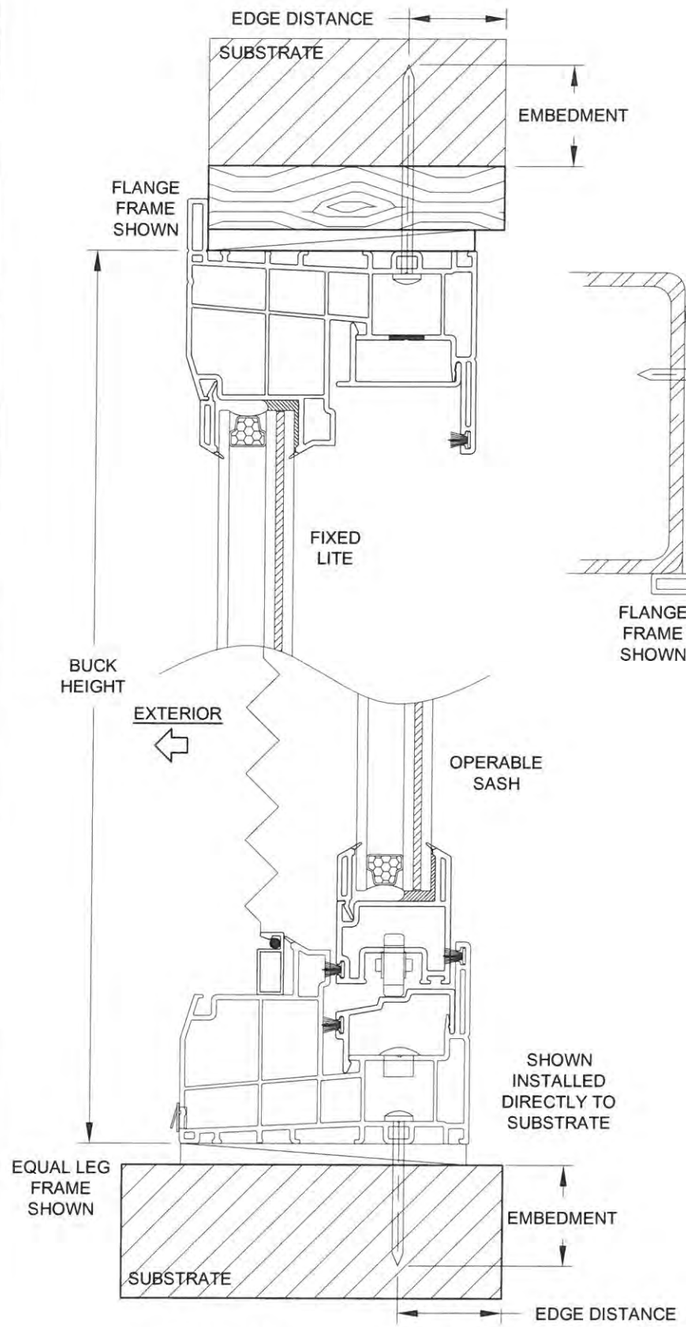

VERTICAL SECTION B-B

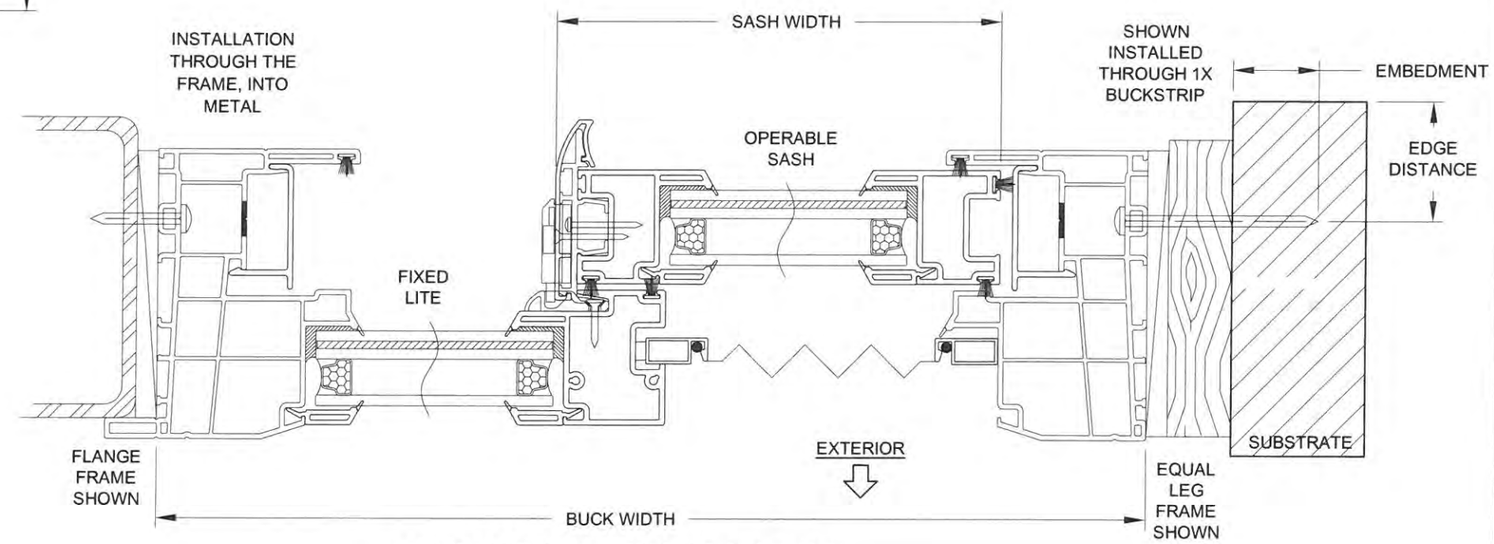

HORIZONTAL SECTION A-A (XO)

(OX & XOX SIMILAR)

INSTALLATION NOTES:

1) SEE SHEET 1 FOR SPACING REQUIREMENTS.
2) SEE TABLE(S) ON SHEET 2 FOR ANCHORAGE AND SUBSTRATE REQUIREMENTS.
3) MAX. SHIM THICKNESS TO BE 1/4".
4) GLASS SHOWN IS FOR ILLUSTRATIVE PURPOSES ONLY AND MAY DIFFER TO MEET DESIGN REQUIREMENTS.
5) FIN AND/OR FLANGE MAY BE REMOVED TO CREATE OTHER FRAME TYPES.

1070 TECHNOLOGY DRIVE
N. VENICE, FL 34275
(941)-480-1600

Title	VINYL HR WINDOW TDI (IMP.-RESIST.)			Date	3/17/15
Desc.	FLANGE & EQUAL-LEG/BOX FRAMES			Drawn By	J ROSOWSKI
Rev 1				Rev 1 Date	
Rev 2				Rev 2 Date	
Series	HR-5510	Scale NTS	Sheet 3 OF 4	DWG No.	TDI-HR5510.1
Rev. No.					

STATE OF TEXAS
ANTHONY LYNN MILLER
106954
LICENSED
PROFESSIONAL ENGINEER

3/17/15

A. LYNN MILLER, P.E.
P.E.# 106954

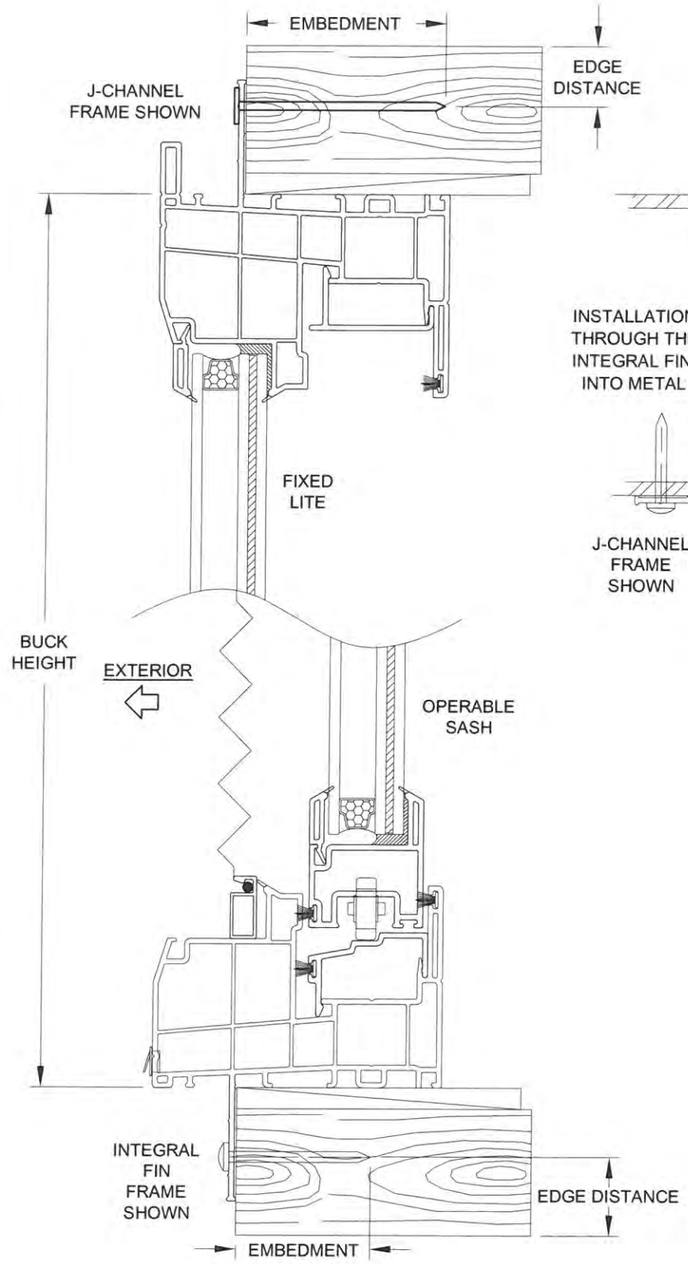

VERTICAL SECTION D-D

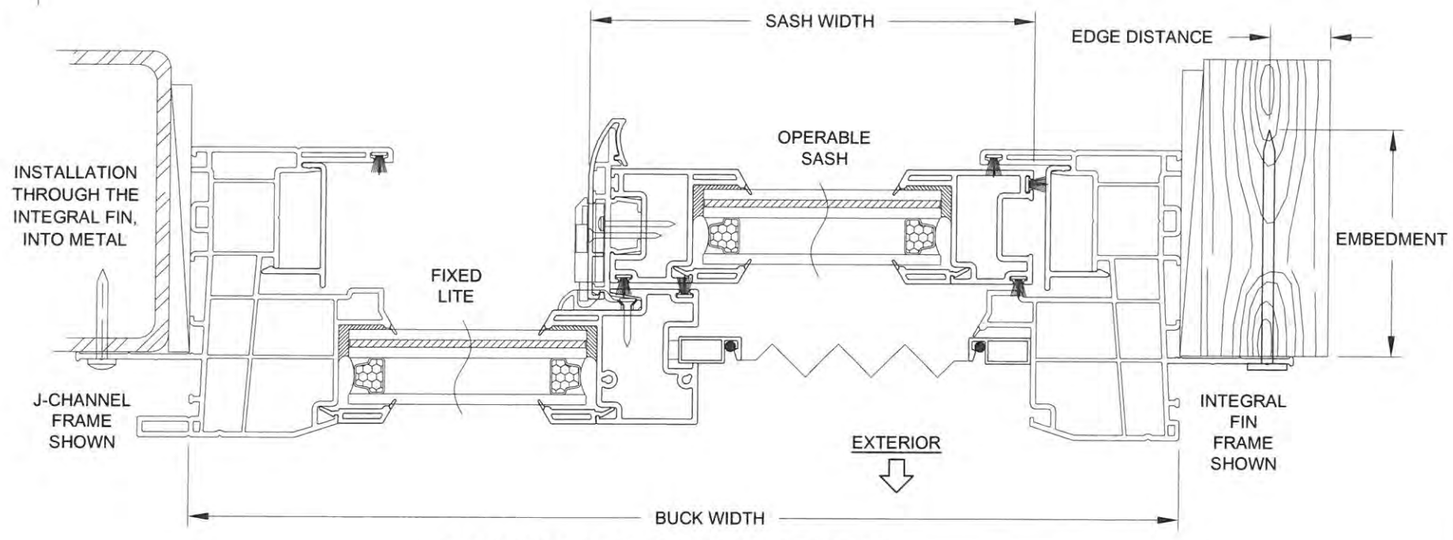

HORIZONTAL SECTION C-C (XO)

(OX & XOX SIMILAR)

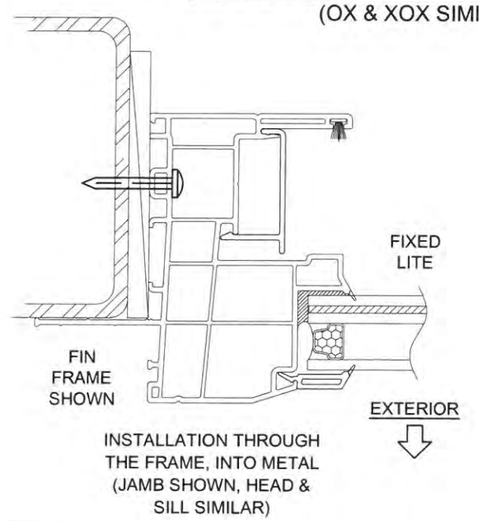

INSTALLATION NOTES:

1) SEE SHEET 1 FOR SPACING REQUIREMENTS.
2) SEE TABLE(S) ON SHEET 2 FOR ANCHORAGE AND SUBSTRATE REQUIREMENTS.
3) MAX. SHIM THICKNESS TO BE 1/4".
4) GLASS SHOWN IS FOR ILLUSTRATIVE PURPOSES ONLY AND MAY DIFFER TO MEET DESIGN REQUIREMENTS.
5) FIN AND/OR FLANGE MAY BE REMOVED TO CREATE OTHER FRAME TYPES.

PGT®
1070 TECHNOLOGY DRIVE
N. VENICE, FL 34275
(941)-480-1600

Title	VINYL HR WINDOW TDI (IMP.-RESIST.)	Date	3/17/15
Desc.	J-CHANNEL & INTEGRAL FIN FRAMES	Drawn By	J ROSOWSKI
Rev 1		Rev 1 Date	
Rev 2		Rev 2 Date	
Series	HR-5510	Scale	NTS
Sheet	4 OF 4	DWG No.	TDI-HR5510.1
Rev. No.			

STATE OF TEXAS
ANTHONY LYNN MILLER
106954
LICENSED
PROFESSIONAL ENGINEER

3/17/15

A. LYNN MILLER, P.E.
P.E.# 106954