IMPACT-RESISTANT

GENERAL NOTES :

1) THE ANCHORAGE METHODS SHOWN HAVE BEEN DESIGNED TO COMPLY WITH THE 2006 INTERNATIONAL BUILDING CODE FOR THE DESIGN PRESSURES LISTED.

2) WOOD BUCKS DEPICTED AS 1X ARE LESS THAN 1-1/2" THICK. 1X WOOD BUCKS ARE OPTIONAL IF UNIT IS INSTALLED DIRECTLY TO SOLID CONCRETE. WOOD BUCKS DEPICTED AS 2X ARE 1-1/2" THICK OR GREATER. ATTACHMENT METHOD OF WOOD BUCKS SHALL BE DONE BY OTHERS.

3) SEE TABLES FOR MINIMUM EDGE DISTANCE FROM CENTER OF ANCHOR TO SUBSTRATE EDGE (EXCLUDING FINISH OR STUCCO).

4) SHIM EACH ANCHOR LOCATION WHERE THE PRODUCT IS NOT FLUSH TO THE SUBSTRATE, USING SHIMS CAPABLE OF TRANSFERRING APPLIED LOADS.

5) ANCHORS SHALL BE COATED OR CORROSION RESISTANT AS SPECIFIED IN THE 2006 TEXAS REVISIONS TO THE 2006 INTERNATIONAL BUILDING CODE.

6) ADHESIVE SEALANT SHALL BE USED BETWEEN SUBSTRATE AND FLANGE OR FIN. OVERALL SEALING/FLASHING STRATEGY FOR WATER RESISTANCE OF INSTALLATION SHALL BE DONE BY OTHERS.

7) MATERIALS USED FOR ANCHOR EVALUATIONS WERE SOUTHERN PINE, 2.7 KSI CONCRETE AND CONCRETE MASONRY UNITS COMPLYING WITH ASTM C-90. GLAZING COMPLIES WITH ASTM E1300-09.

8) THE 1/3 STRESS INCREASE WAS NOT USED IN THIS ANCHOR EVALUATION. THE 1.6 LOAD DURATION FACTOR WAS USED FOR THE EVALUATION OF WOOD SCREWS.

9) IF THE EXACT PRODUCT SIZE IS NOT LISTED IN THE TABLES, ALWAYS ROUND UP TO THE NEXT LARGER VALUE.

TABLE 1: DESIGN PRESSURE

| Window Buck Size | | Model | Configuration | Design Pressure | | Certification Numbers |
|---|---|---|---|---|---|---|
| Width | Height | | | (+) psf | (-) psf | |
| 74.25" | 63.25" | 2LT HR2810MI | XX | 70 | 100 | 190-244, 751 |
| 74.25" | 76" | 2LT HR2810MI | XX | 60 | 80 | 190-241, 748 |
| 130" | 63" | 3LT HR2810MI | XOX (1/4-1/2-1/4) | 75 | 100 | 190-245, 752 |
| 109.032" | 63" | 3LT HR2810MI | XOX (1/3-1/3-1/3) | 75 | 100 | 190-245, 752 |

ANCHOR LOCATIONS & SPACING

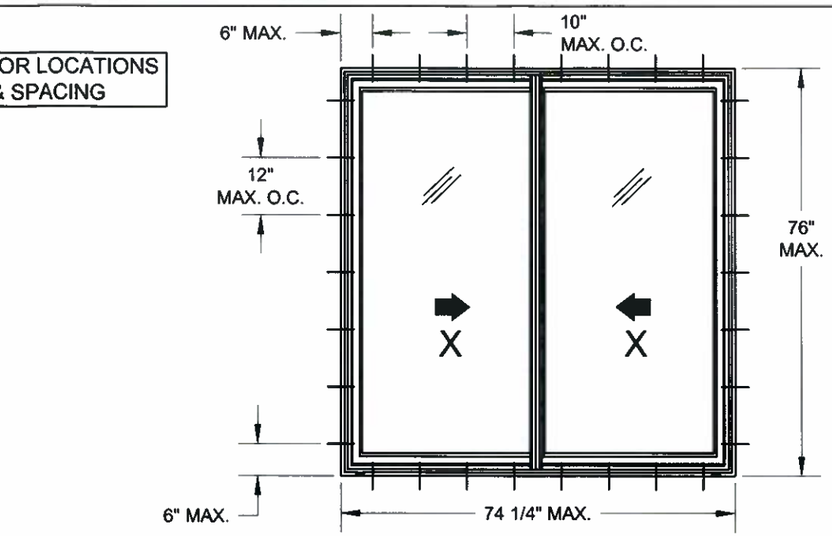


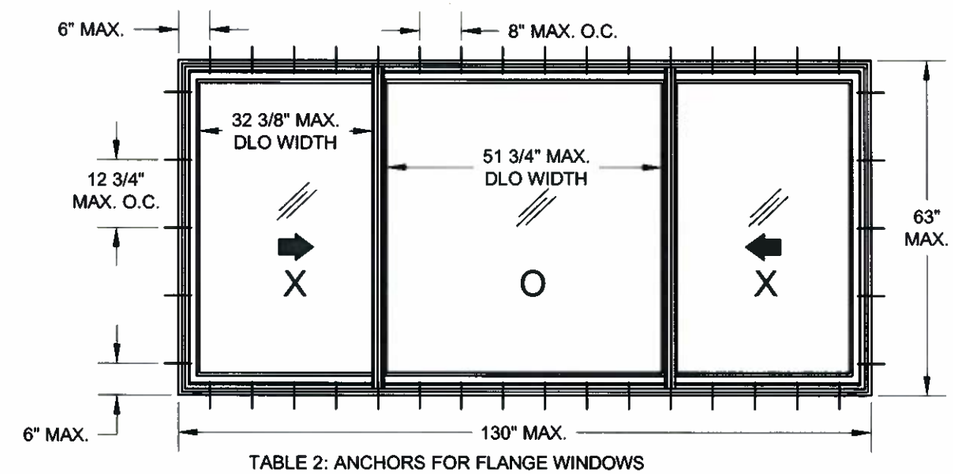


TABLE 2: ANCHORS FOR FLANGE WINDOWS

| Anchor | Substrate | Min. Edge Distance | Min. Embedment |
|---|---|---|---|
| #10 Sheet Metal Screw, G5 Steel or 410 Stainless Steel | P.T. Southern Pine (SG = .55) | 1/2" | 1-3/8" |
| | Aluminum, 6063-T5 min. | 3/8" | 1/8" |
| | Steel Stud, Gr. 33 min. | 3/8" | 0.0346 (20 ga) |
| | A36 Steel | 3/8" | 1/8" |
| 3/16" Steel Ultracon | P.T. Southern Pine (SG = .55) | 1/2" | 1-3/8" |
| | Concrete (min. 2.7 ksi) | 1" | 1" |
| | Ungrouted CMU, (ASTM C-90) | 1" | 1-1/4" |

NOTE: FOR ALL METAL SUBSTRATES, SCREW EMBEDMENT SHALL BE MIN. 3 THREADS BEYOND INSIDE FACE OF MATERIAL.

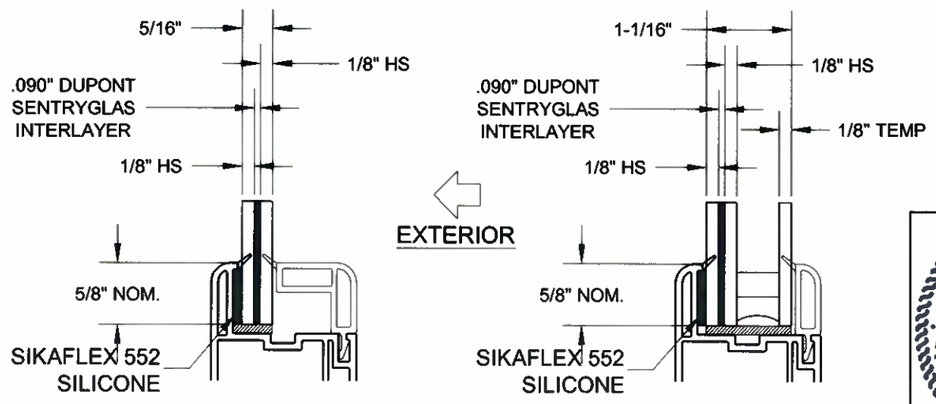


GLAZING DETAILS

STATE OF TEXAS
ANTHONY LYNN MILLER
106954
LICENSED
PROFESSIONAL ENGINEER
9/17/13

PGT®
1070 TECHNOLOGY DRIVE
NOKOMIS, FL 34275

A. Lynn Miller, P.E.
P.E. #106954

| Drawn By: | Date: | Material: |
|---|---|---|
| J. ROSOWSKI | 09/17/13 | VINYL |

Revsd By: | Date: | Revisions:

Description:

THE INFORMATION, DESIGN OR DATA CONTAINED HEREIN IS THE EXCLUSIVE PROPERTY OF PGT INDUSTRIES AND CONSIDERED CONFIDENTIAL AND PROPRIETARY. NO PORTION OF THIS DOCUMENT MAY BE USED OR REPRODUCED IN ANY FORM WITHOUT THE EXPRESSED WRITTEN PERMISSION OF PGT INDUSTRIES.

Title: HORIZONTAL SLIDING WINDOW INSTALLATION

| Series/Model: | Scale: | Sheet: | Drawing No. | Rev: |
|---|---|---|---|---|
| HR-2810 | NTS | 1 of 3 | TDI-HR2810.1 | |

## INSTALLATION WITH FLANGE FRAME

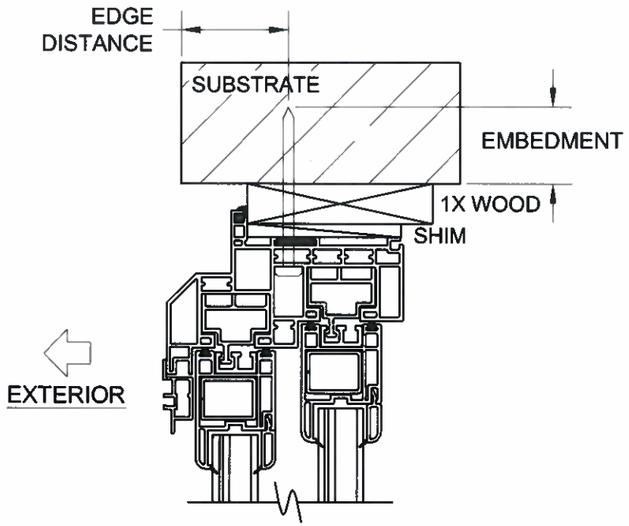


FLANGE FRAME, HEAD INSTALLATION (USING 1X BUCKSTRIP)

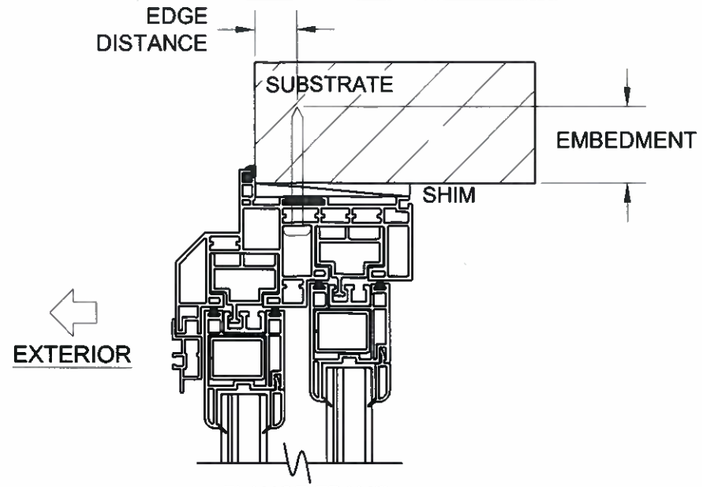


FLANGE FRAME, HEAD INSTALLATION (DIRECTLY TO SUBSTRATE)

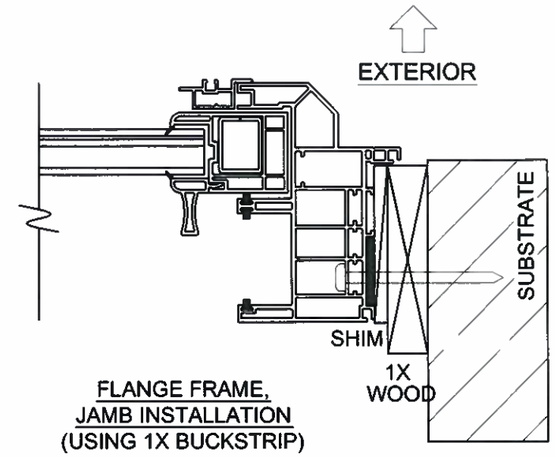


FLANGE FRAME, JAMB INSTALLATION (USING 1X BUCKSTRIP)

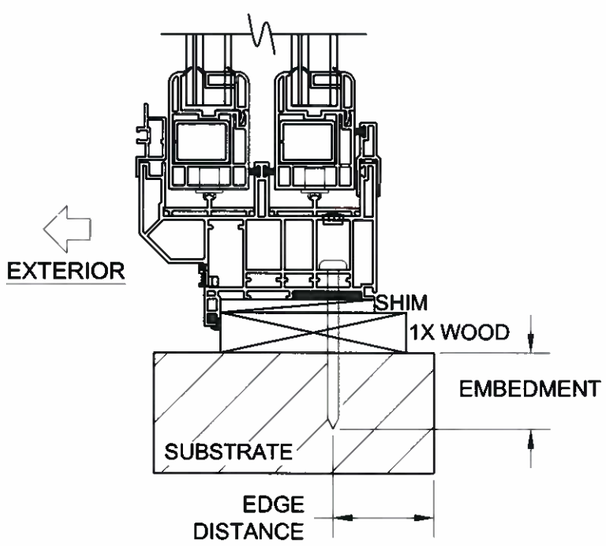


FLANGE FRAME, SILL INSTALLATION (USING 1X BUCKSTRIP)

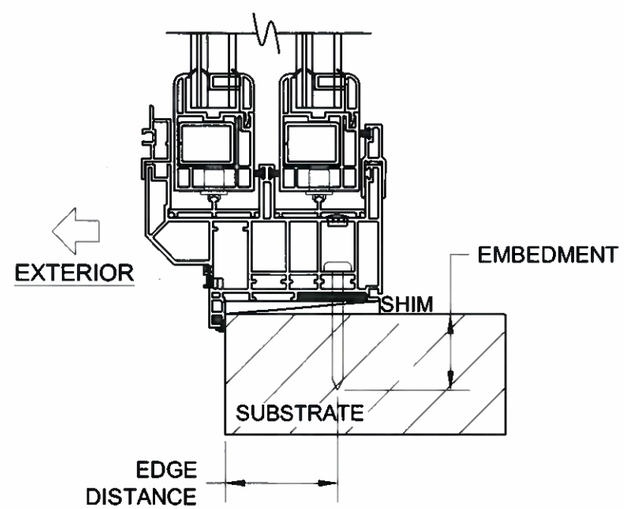


FLANGE FRAME, SILL INSTALLATION (DIRECTLY TO SUBSTRATE)

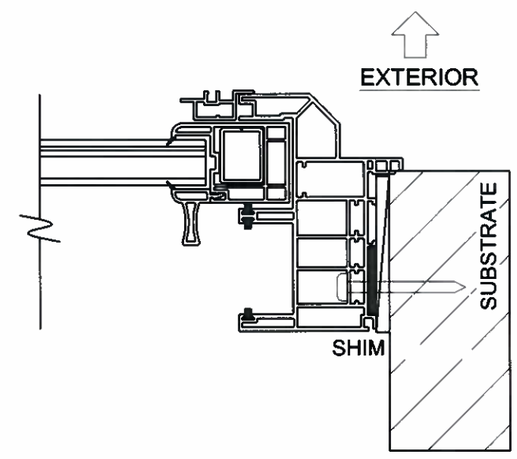


FLANGE FRAME, JAMB INSTALLATION (DIRECTLY TO SUBSTRATE)

INSTALLATION NOTES:

1) SEE SHEET 1 FOR SPACING REQUIREMENTS.
2) SEE TABLE(S) ON SHEET 1 FOR ANCHORAGE AND SUBSTRATE REQUIREMENTS.
3) MAX. SHIM THICKNESS TO BE 1/4".
4) GLASS SHOWN IS FOR ILLUSTRATIVE PURPOSES ONLY AND MAY DIFFER TO MEET DESIGN REQUIREMENTS.
5) FIN AND/OR FLANGE MAY BE REMOVED. FOR EQUAL-LEG FRAME APPLICATIONS, USE FLANGE INSTRUCTIONS.

STATE OF TEXAS
ANTHONY LYNN MILLER
106954
LICENSED
PROFESSIONAL ENGINEER
9/17/13

PGT®
1070 TECHNOLOGY DRIVE
NOKOMIS, FL 34275

A. Lynn Miller, P.E.
P.E. #106954

| Drawn By: | Date: | Material: |
|---|---|---|
| J. ROSOWSKI | 09/17/13 | VINYL |
| Revsd By: | Date: | Revisions: |

Description:

Title: HORIZONTAL SLIDING WINDOW INSTALLATION

| Series/Model: | Scale: | Sheet: | Drawing No. | Rev: |
|---|---|---|---|---|
| HR-2810 | NTS | 2 of 3 | TDI-HR2810.1 | |

THE INFORMATION, DESIGN OR DATA CONTAINED HEREIN IS THE EXCLUSIVE PROPERTY OF PGT INDUSTRIES AND CONSIDERED CONFIDENTIAL AND PROPRIETARY. NO PORTION OF THIS DOCUMENT MAY BE USED OR REPRODUCED IN ANY FORM WITHOUT THE EXPRESSED WRITTEN PERMISSION OF PGT INDUSTRIES.

## INSTALLATION WITH FIN FRAME

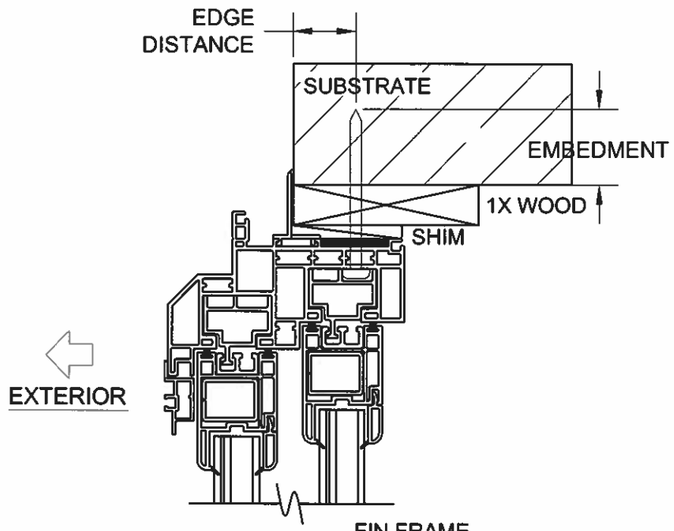


FIN FRAME,
HEAD INSTALLATION
(USING 1X BUCKSTRIP)

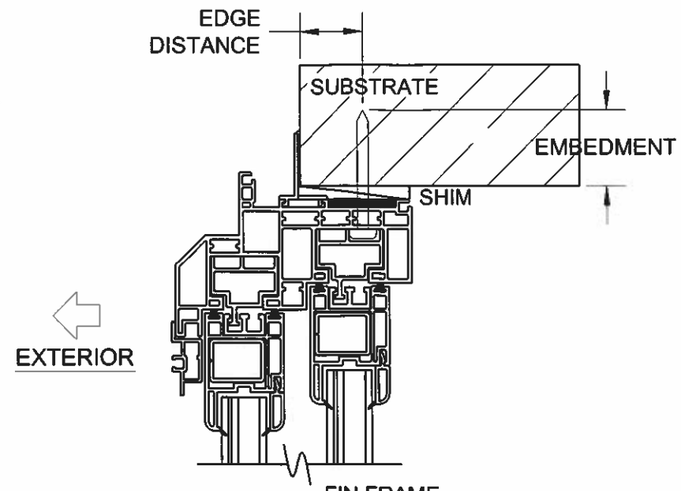


FIN FRAME,
HEAD INSTALLATION
(DIRECTLY TO SUBSTRATE)

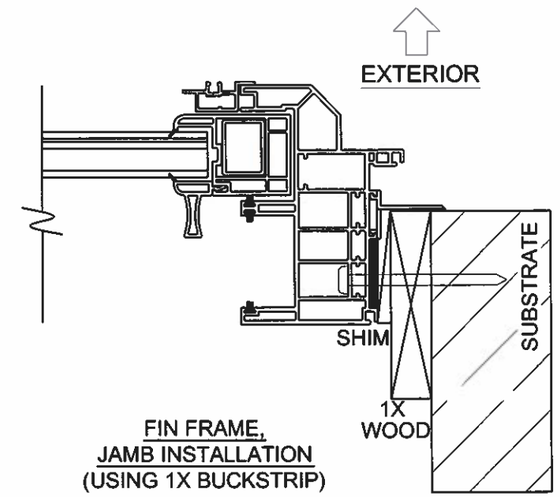


FIN FRAME,
JAMB INSTALLATION
(USING 1X BUCKSTRIP)

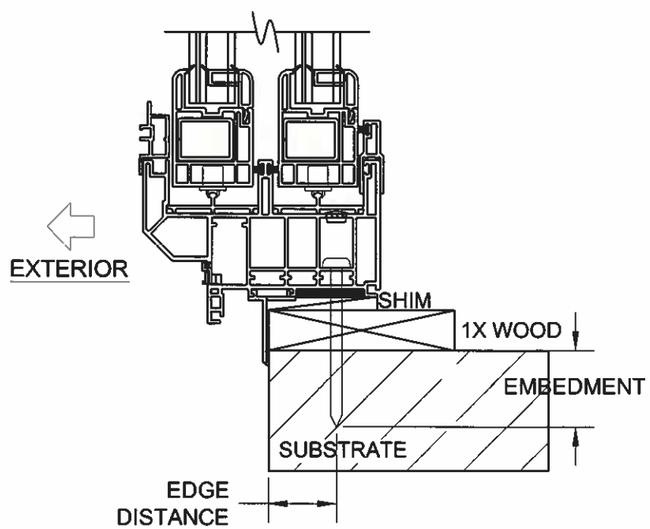


FIN FRAME,
SILL INSTALLATION
(USING 1X BUCKSTRIP)

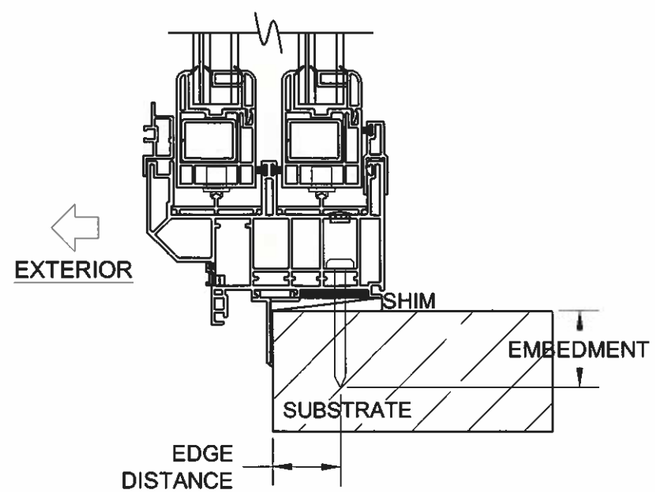


FIN FRAME,
SILL INSTALLATION
(DIRECTLY TO SUBSTRATE)

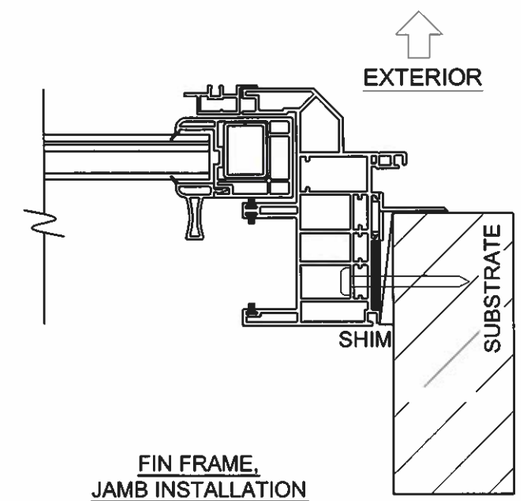


FIN FRAME,
JAMB INSTALLATION
(DIRECTLY TO SUBSTRATE)

INSTALLATION NOTES:

1) SEE SHEET 1 FOR SPACING REQUIREMENTS.
2) SEE TABLE(S) ON SHEET 1 FOR ANCHORAGE AND SUBSTRATE REQUIREMENTS.
3) MAX. SHIM THICKNESS TO BE 1/4".
4) GLASS SHOWN IS FOR ILLUSTRATIVE PURPOSES ONLY AND MAY DIFFER TO MEET DESIGN REQUIREMENTS.
5) FIN AND/OR FLANGE MAY BE REMOVED. FOR EQUAL-LEG FRAME APPLICATIONS, USE FLANGE INSTRUCTIONS.

STATE OF TEXAS
ANTHONY LYNN MILLER
106954
LICENSED
PROFESSIONAL ENGINEER
9/17/13

PGT®
1070 TECHNOLOGY DRIVE
NOKOMIS, FL 34275

A. Lynn Miller, P.E.
P.E. #106954

| Drawn By: | Date: | Material: |
|---|---|---|
| J. ROSOWSKI | 09/17/13 | VINYL |

| Revsd By: | Date: | Revisions: |
|---|---|---|
| | | |

Description:

Title: HORIZONTAL SLIDING WINDOW INSTALLATION

| Series/Model: | Scale: | Sheet: | Drawing No. | Rev: |
|---|---|---|---|---|
| HR-2810 | NTS | 3 of 3 | TDI-HR2810.1 | |

THE INFORMATION, DESIGN OR DATA CONTAINED HEREIN IS THE EXCLUSIVE PROPERTY OF PGT INDUSTRIES AND CONSIDERED CONFIDENTIAL AND PROPRIETARY. NO PORTION OF THIS DOCUMENT MAY BE USED OR REPRODUCED IN ANY FORM WITHOUT THE EXPRESSED WRITTEN PERMISSION OF PGT INDUSTRIES.