REVISIONS			
REV	DESCRIPTION	DATE	APPROVED

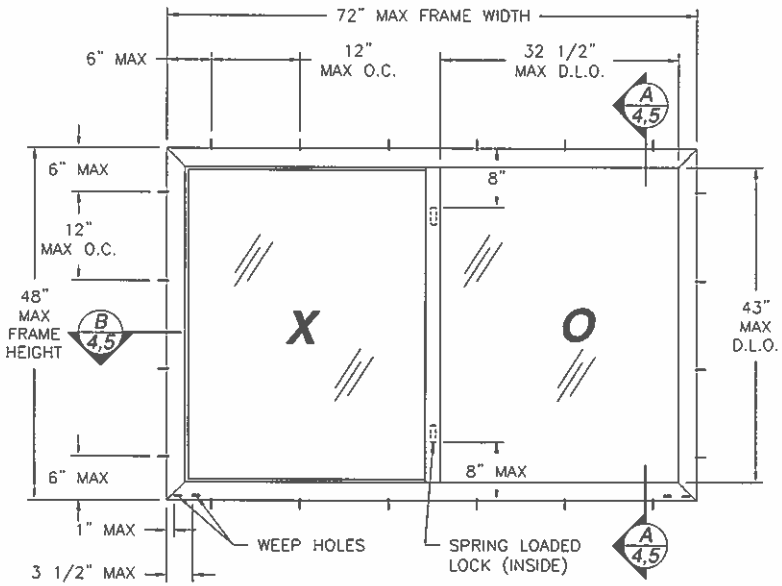

WINDQUEST V707 SINGLE SLIDER
EXTERIOR VIEW FRAME FLUSH INSTALLATION

DESIGN PRESSURE RATING	IMPACT RATING
±55.0PSF	NONE

NOTES:

1) THE PRODUCT SHOWN HEREIN IS DESIGNED AND MANUFACTURED TO COMPLY WITH REQUIREMENTS OF THE 2006 IBC AND 2006 IRC WITH STATE OF TEXAS MODIFICATIONS.
2) WOOD FRAMING AND MASONRY OPENING TO BE DESIGNED AND ANCHORED TO PROPERLY TRANSFER ALL LOADS TO STRUCTURE. FRAMING AND MASONRY OPENING IS THE RESPONSIBILITY OF THE ARCHITECT OR ENGINEER OF RECORD.
3) 1X BUCK OVER MASONRY/CONCRETE IS OPTIONAL. WHERE 1X BUCK IS NOT USED DISSIMILAR MATERIALS MUST BE SEPARATED WITH APPROVED COATING OR MEMBRANE. SELECTION OF COATING OR MEMBRANE IS THE RESPONSIBILITY OF THE ARCHITECT OR ENGINEER OF RECORD.
4) ALLOWABLE STRESS INCREASE OF 1/3 WAS NOT USED IN THE DESIGN OF THE PRODUCT SHOWN HEREIN. WIND LOAD DURATION FACTOR Cd=1.6 WAS USED FOR WOOD ANCHOR CALCULATIONS.
5) FRAME MATERIAL: EXTRUDED RIGID PVC.
6) UNITS MUST BE GLAZED PER ASTM E1300-04. SEE SHEET 2 FOR GLASS OPTIONS.
7) APPROVED IMPACT PROTECTIVE SYSTEM IS REQUIRED FOR THIS PRODUCT IN WIND BORNE DEBRIS REGIONS.
8) SHIM AS REQUIRED AT EACH INSTALLATION ANCHOR WITH LOAD BEARING SHIM. SHIM WHERE SPACE OF 1/16" OR GREATER OCCURS. MAXIMUM ALLOWABLE SHIM STACK TO BE 1/4".
9) FOR ANCHORING INTO MASONRY/CONCRETE USE 3/16" TAPCONS WITH SUFFICIENT LENGTH TO ACHIEVE A 1 1/4" MINIMUM EMBEDMENT INTO SUBSTRATE WITH 2 1/2" MINIMUM EDGE DISTANCE. LOCATE ANCHORS AS SHOWN IN ELEVATIONS AND INSTALLATION DETAILS.
10) FOR ANCHORING INTO WOOD FRAMING OR 2X BUCK USE #8 WOOD SCREWS WITH SUFFICIENT LENGTH TO ACHIEVE A 1 1/4" MINIMUM EMBEDMENT INTO SUBSTRATE. LOCATE ANCHORS AS SHOWN IN ELEVATIONS AND INSTALLATION DETAILS.
11) FOR ANCHORING INTO METAL STRUCTURE USE #8 SMS OR SELF DRILLING SCREWS SCREWS WITH SUFFICIENT LENGTH TO ACHIEVE 3 THREADS MINIMUM BEYOND STRUCTURE INTERIOR WALL. LOCATE ANCHORS AS SHOWN IN ELEVATIONS AND INSTALLATION DETAILS.
12) ALL FASTENERS TO BE CORROSION RESISTANT.
13) INSTALLATION ANCHORS SHALL BE INSTALLED IN ACCORDANCE WITH ANCHOR MANUFACTURER'S INSTALLATION INSTRUCTIONS, AND ANCHORS SHALL NOT BE USED IN SUBSTRATES WITH STRENGTHS LESS THAN THE MINIMUM STRENGTH SPECIFIED BELOW:
    A. WOOD – MINIMUM SPECIFIC GRAVITY OF G=0.42
    B. CONCRETE – MINIMUM COMPRESSIVE STRENGTH OF 3,192 PSI.
    C. MASONRY – STRENGTH CONFORMANCE TO ASTM C-90, GRADE N, TYPE 1 (OR GREATER).
    D. METAL STRUCTURE: STEEL 18GA, 33KSI OR ALUMINUM 6063-T5 1/8" THICK MINIMUM
14) APPROVED CONFIGURATIONS: OX,XO.

SIGNED: 07/26/2013

TABLE OF CONTENTS

SHEET NO.	DESCRIPTION
1, 2	ELEVATION, ANCHORING AND NOTES
3	CROSS SECTIONS AND B.O.M.
4 – 8	INSTALLATION DETAILS
9	COMPONENTS

KOLBE & KOLBE MILLWORK
1211 DEPOT ST
MANAWA, MI 54949

WINDQUEST V707 SINGLE SLIDER
72" x 48" NON-IMPACT
ELEVATION AND NOTES

DRAWN:	DWG NO.	REV
V.L.	08-02171	–
SCALE NTS	DATE 07/26/13	SHEET 1 OF 9

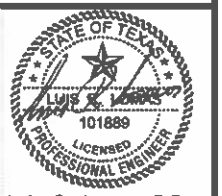

Luis R. Lomas P.E.
TX No.: 101889

REVISIONS			
REV	DESCRIPTION	DATE	APPROVED

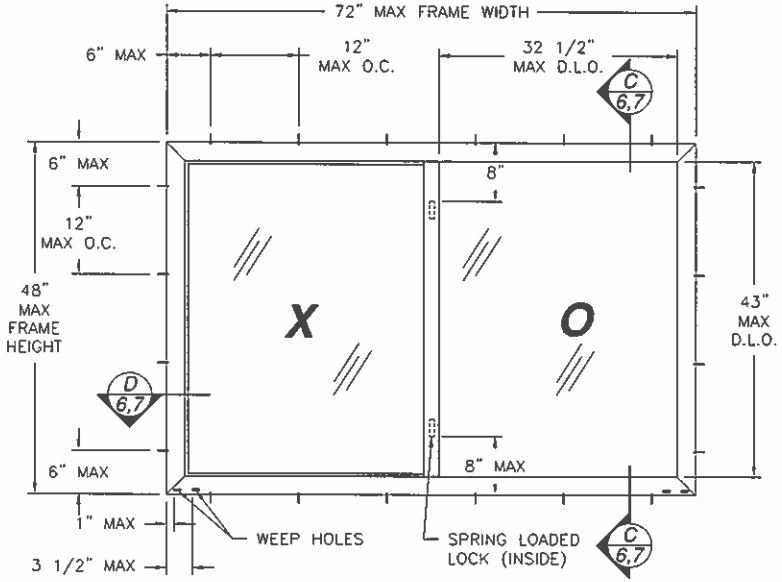

WINDQUEST V707 SINGLE SLIDER
EXTERIOR VIEW STRAP INSTALLATION

DESIGN PRESSURE RATING	IMPACT RATING
±55.0PSF	NONE

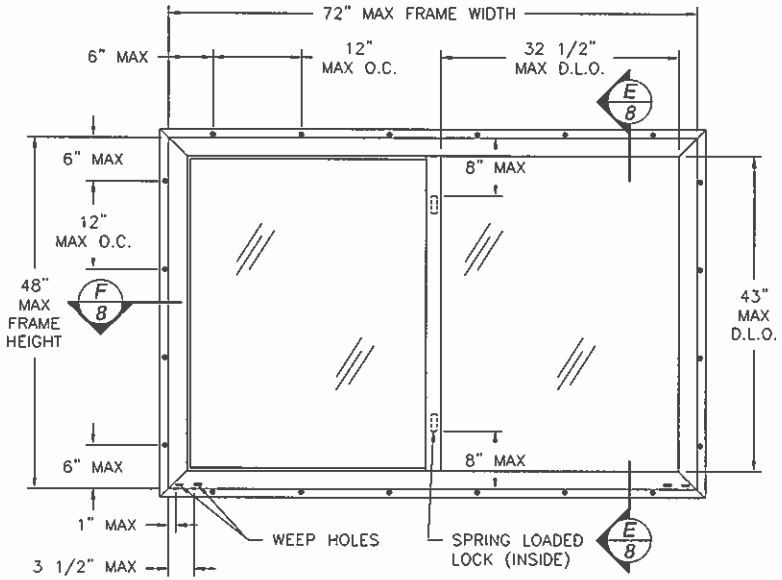

WINDQUEST V707 SINGLE SLIDER
EXTERIOR VIEW NAILING FIN INSTALLATION

DESIGN PRESSURE RATING	IMPACT RATING
±55.0PSF	NONE

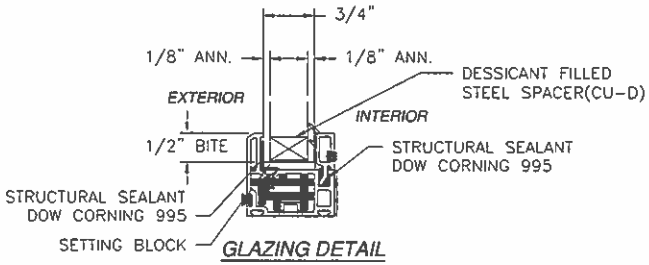

GLAZING DETAIL

SIGNED: 07/26/2013

KOLBE & KOLBE MILLWORK
1211 DEPOT ST
MANAWA, MI 54949

WINDQUEST V707 SINGLE SLIDER
72" x 48" NON-IMPACT
ELEVATION AND NOTES

DRAWN: V.L.	DWG NO. 08-02171	REV -
SCALE NTS	DATE 07/26/13	SHEET 2 OF 9

STATE OF TEXAS
LUIS R. LOMAS
101889
LICENSED
PROFESSIONAL ENGINEER

Luis R. Lomas P.E.
TX No.: 101889

PARTS LIST				
NO.	PART NUMBER	DESCRIPTION	MANUFACTURER	MATERIAL
1	4254	MULLION	THERMOPLAST INC	WHITE PVC
2	4202	FRAME	THERMOPLAST INC	WHITE PVC
3	4008	SILL COVER	THERMOPLAST INC	WHITE PVC
4	4084A	SASH INTERLOCK	THERMOPLAST INC	WHITE PVC
5	4027A	SASH FRAME	THERMOPLAST INC	WHITE PVC
6	4299	JAMB ADAPTER	THERMOPLAST INC	WHITE PVC
7	4219	SILL ADAPTER	THERMOPLAST INC	WHITE PVC
8	4022	7/8" GLAZING BEAD	THERMOPLAST INC	WHITE PVC
9	4010	SASH STOP	THERMOPLAST INC	WHITE PVC
10	4013	7/8" GLAZING BEAD	THERMOPLAST INC	WHITE PVC
11		7/16" SCREEN FRAME		
12	HF-7320-187	WHEATHERSTRIP	SCHLEGEL	
13	PB-8830-187	WHEATHERSTRIP	SCHLEGEL	
14	DPA8	WHEATHERSTRIP 1.062-200FIN	SCHLEGEL	
15		SETTING BLOCK 7/8" X 1 X 1/8"		80 DUROMETER
16	808-0018	TILT LATCH	THERMOPLAST	
17	4076	ROLLERS	THERMOPLAST	
18	995	STRUCTURAL SEALANT	DOW CORNING	
19	SL047500	LOCK	ROTO	
20	SL047550	KEEPER	ROTO	
21		SCREEN SPRING		
22		GLAZING TAPE .5" X 1/6"		
23	4052	MULLION CONNECTOR		
24	4053	SCREEN SUPPORT		
25		LOCK SCREWS FH #6 X 1"		
26		KEEPER SCREWS FH #6 X 1 1/2"		
27	2222	MULLION CONNECTOR SCREWS		
28		SCREEN SUPPORT FH #8 X 1/2"		
29	97-03-00-00	VALVE	GEARMOLD	
30	A112-02M096	MULLION REINFORCEMENT		ALUMINUM 6063-T5
31		RECEPTACLE SCREWS FH #10 X 2"		
32		TILT LATCH SCREWS FH #8 X 1"		
33	A110-02M096	SASH REINFORCEMENT		ALUMINUM 6063-T5
34		REINFORCEMENT SCREWS FH #10X2"		
35		MULLION SCREWS PH #10 X 3"		
36	A111-02M096	MEETING RAIL REINFORCEMENT		ALUMINUM 6063-T5
37	4560	INSTALLATION STRIP		STEEL G60
38	4202E	FRAME, NAILING FIN	THERMOPLAST INC	WHITE PVC

REVISIONS			
REV	DESCRIPTION	DATE	APPROVED

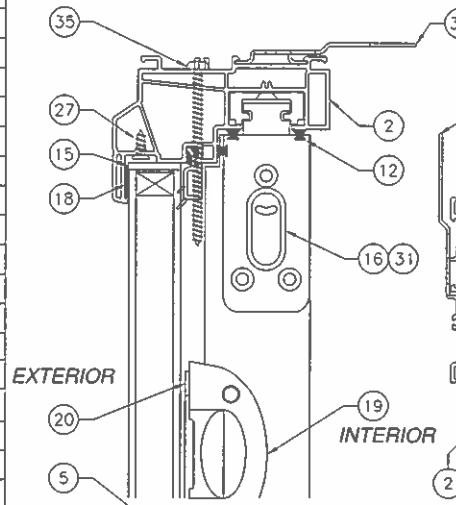

VERTICAL SECTION

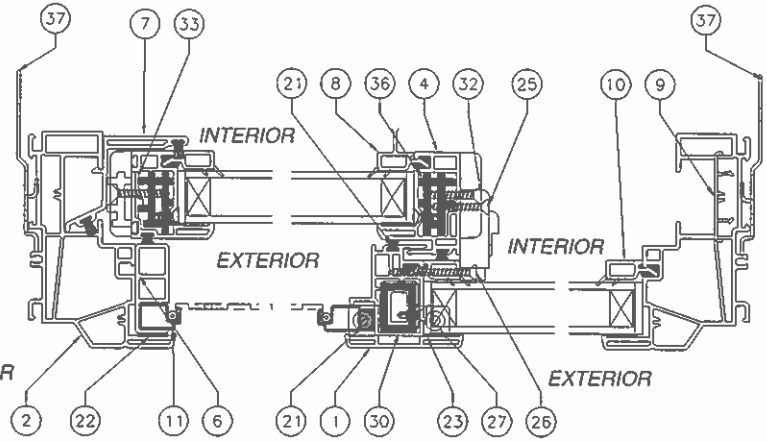

HORIZONTAL SECTION

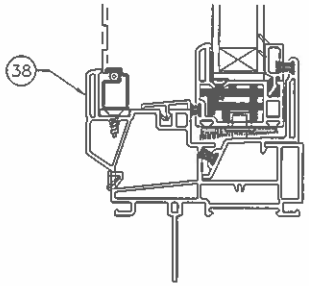

OPTIONAL NAILING FIN FRAME

SIGNED: 07/26/2013

KOLBE & KOLBE MILLWORK
1211 DEPOT ST
MANAWA, MI 54949

WINDQUEST V707 SINGLE SLIDER
72" x 48" NON-IMPACT
CROSS SECTIONS AND B.O.M.

DRAWN:	DWG NO.	REV
V.L.	08-02171	–
SCALE NTS	DATE 07/26/13	SHEET 3 OF 9

STATE OF TEXAS
LUIS R. LOMAS
101889
LICENSED
PROFESSIONAL ENGINEER

Luis R. Lomas P.E.
TX No.: 101889

REVISIONS			
REV	DESCRIPTION	DATE	APPROVED

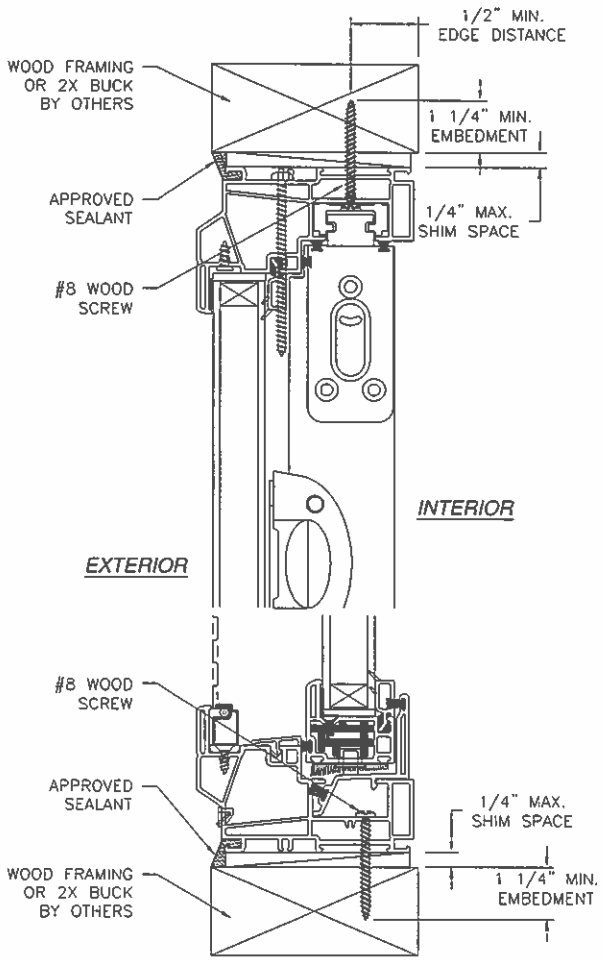

A/4 SECTION
FLUSH INSTALLATION
WOOD FRAMING OR 2X BUCK

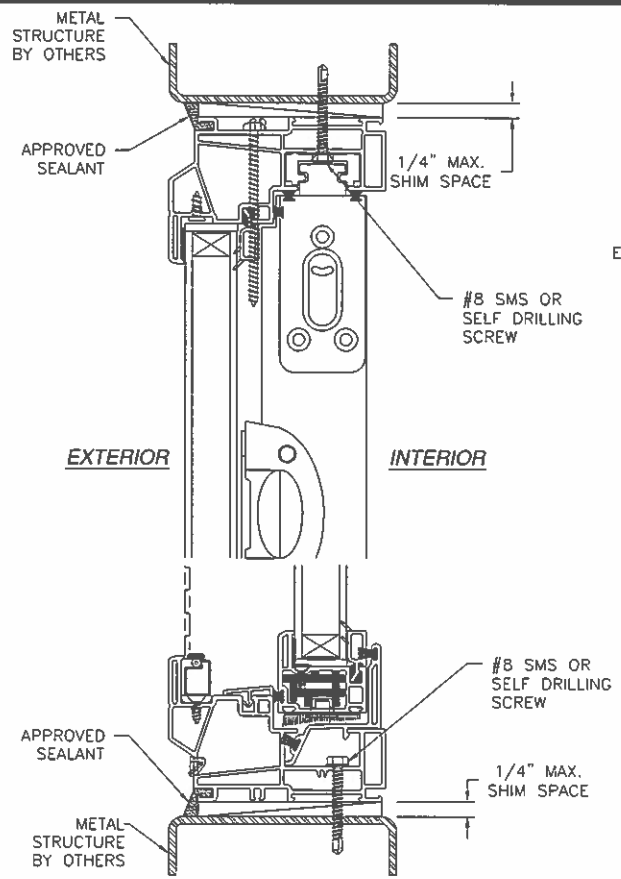

A/4 SECTION
FLUSH INSTALLATION
METAL STRUCTURE

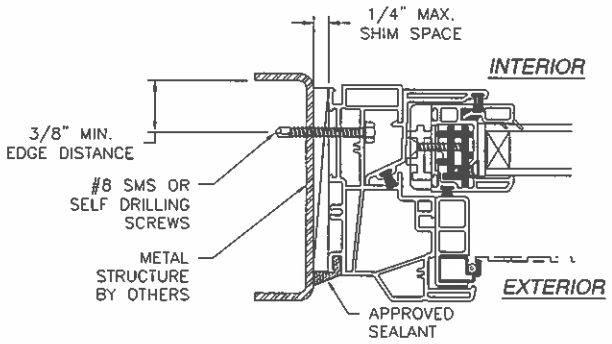

B/4 SECTION
FLUSH INSTALLATION
METAL STRUCTURE

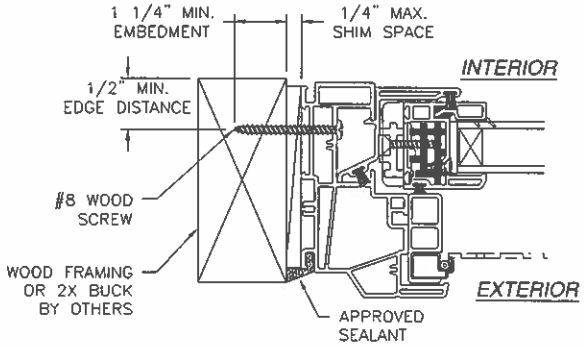

B/4 SECTION
FLUSH INSTALLATION
WOOD FRAMING OR 2X BUCK

SIGNED: 07/26/2013

NOTE:
INTERIOR AND EXTERIOR FINISHES, BY OTHERS, NOT SHOWN FOR CLARITY.

KOLBE & KOLBE MILLWORK
1211 DEPOT ST
MANAWA, MI 54949

WINDQUEST V707 SINGLE SLIDER
72" x 48" NON-IMPACT
INSTALLATION DETAILS

DRAWN: V.L.	DWG NO. 08-02171	REV –
SCALE NTS	DATE 07/26/13	SHEET 4 OF 9

STATE OF TEXAS
LUIS R. LOMAS
101889
LICENSED
PROFESSIONAL ENGINEER

Luis R. Lomas P.E.
TX No.: 101889

REVISIONS			
REV	DESCRIPTION	DATE	APPROVED

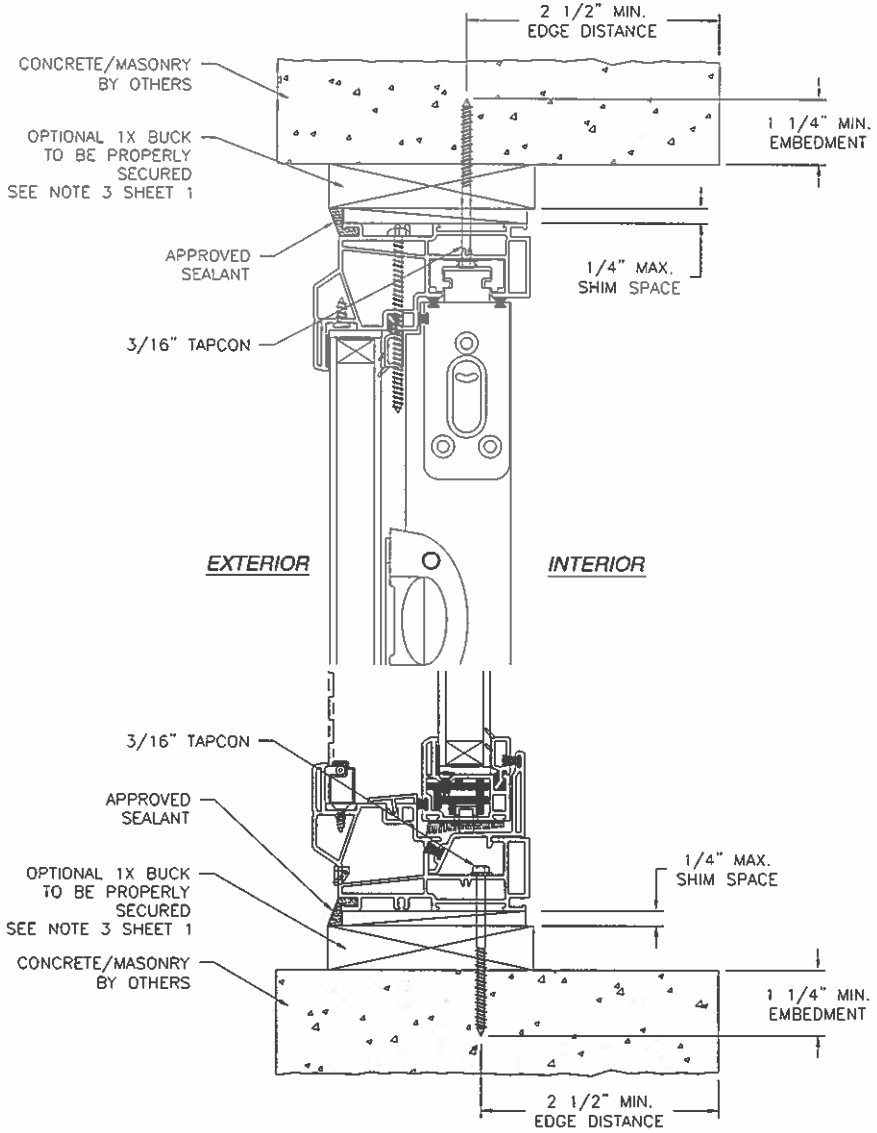

A/5 SECTION
FLUSH INSTALLATION
CONCRETE/MASONRY

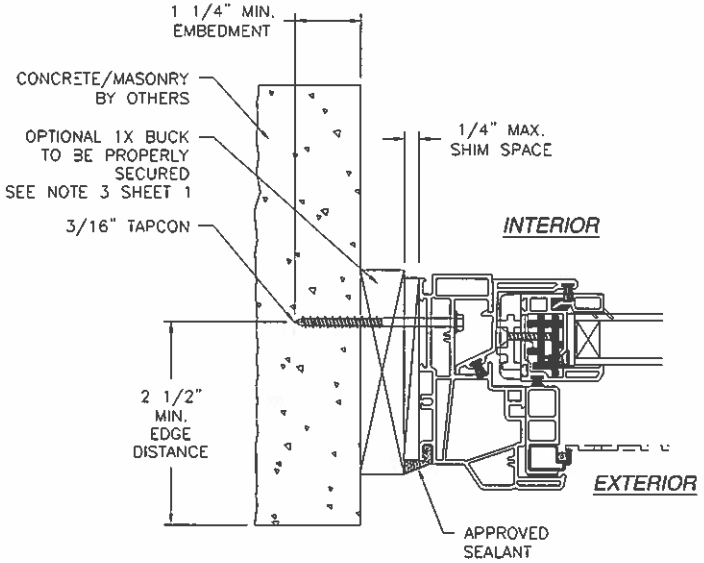

B/5 SECTION
FLUSH INSTALLATION
CONCRETE/MASONRY

NOTE:
INTERIOR AND EXTERIOR FINISHES, BY OTHERS, NOT SHOWN FOR CLARITY.

SIGNED: 07/26/2013

KOLBE & KOLBE MILLWORK
1211 DEPOT ST
MANAWA, MI 54949

WINDQUEST V707 SINGLE SLIDER
72" x 48" NON-IMPACT
INSTALLATION DETAILS

DRAWN:	DWG NO.	REV
V.L.	08-02171	–
SCALE NTS	DATE 07/26/13	SHEET 5 OF 9

Luis R. Lomas P.E.
TX No.: 101889

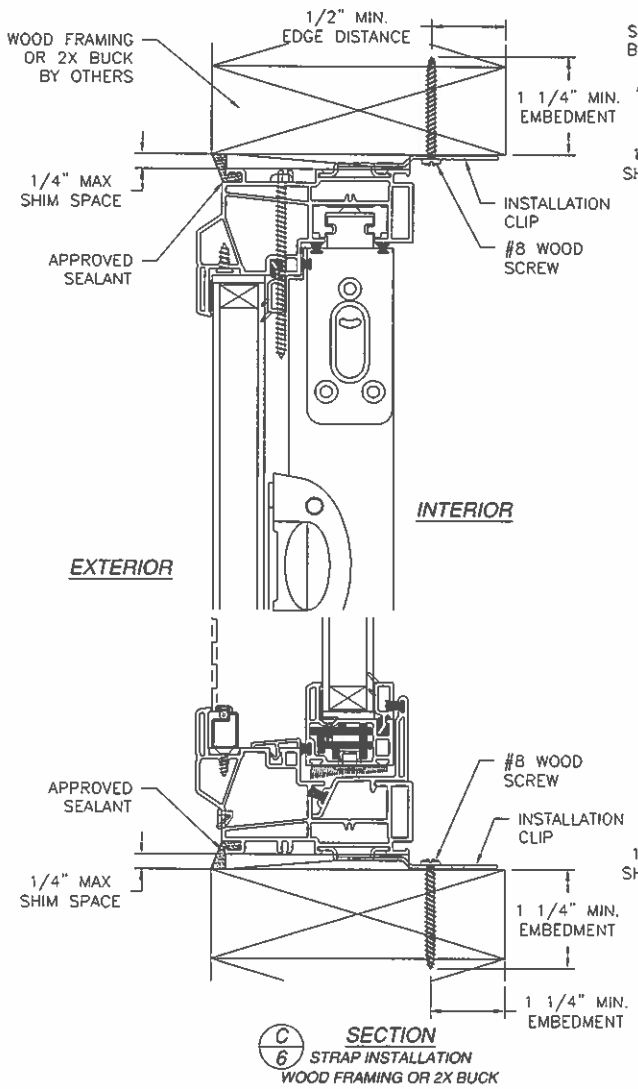

C/6 SECTION
STRAP INSTALLATION
WOOD FRAMING OR 2X BUCK

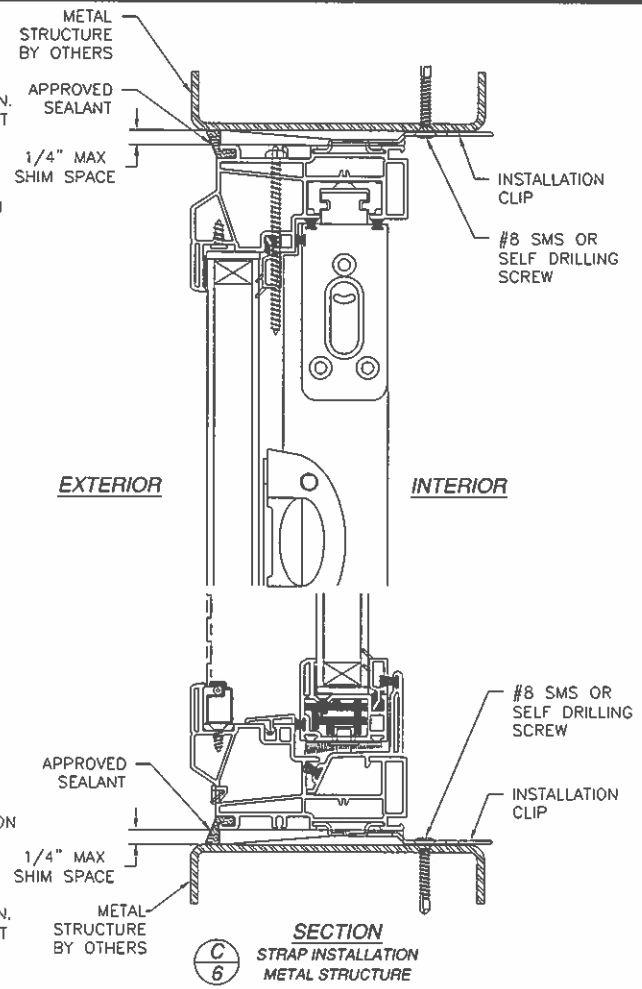

C/6 SECTION
STRAP INSTALLATION
METAL STRUCTURE

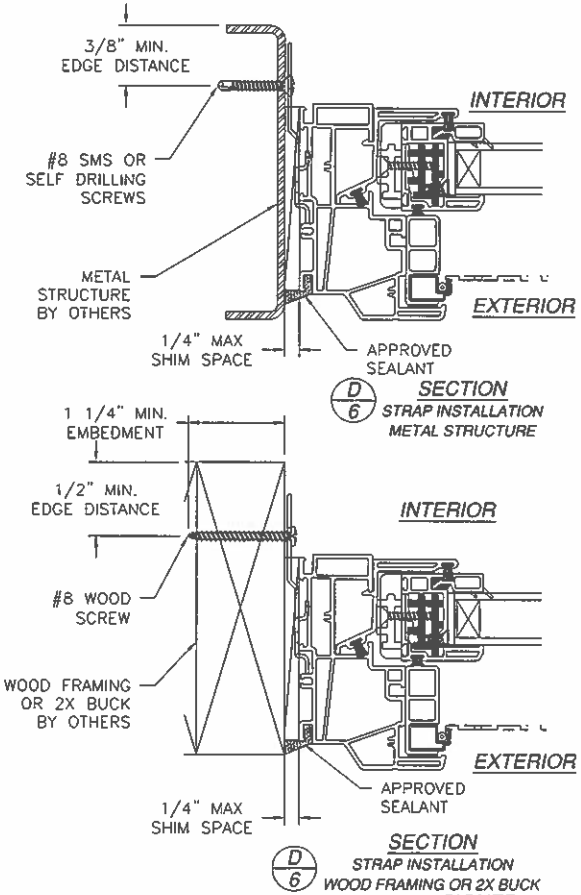

D/6 SECTION
STRAP INSTALLATION
METAL STRUCTURE

D/6 SECTION
STRAP INSTALLATION
WOOD FRAMING OR 2X BUCK

SIGNED: 07/26/2013

NOTE:
INTERIOR AND EXTERIOR FINISHES, BY OTHERS, NOT SHOWN FOR CLARITY.

REVISIONS			
REV	DESCRIPTION	DATE	APPROVED

KOLBE & KOLBE MILLWORK
1211 DEPOT ST
MANAWA, MI 54949

WINDQUEST V707 SINGLE SLIDER
72" x 48" NON-IMPACT
INSTALLATION DETAILS

DRAWN: V.L.	DWG NO. 08-02171	REV –
SCALE NTS	DATE 07/26/13	SHEET 6 OF 9

STATE OF TEXAS
LUIS R. LOMAS
101889
LICENSED
PROFESSIONAL ENGINEER

Luis R. Lomas P.E.
TX No.: 101889

REVISIONS			
REV	DESCRIPTION	DATE	APPROVED

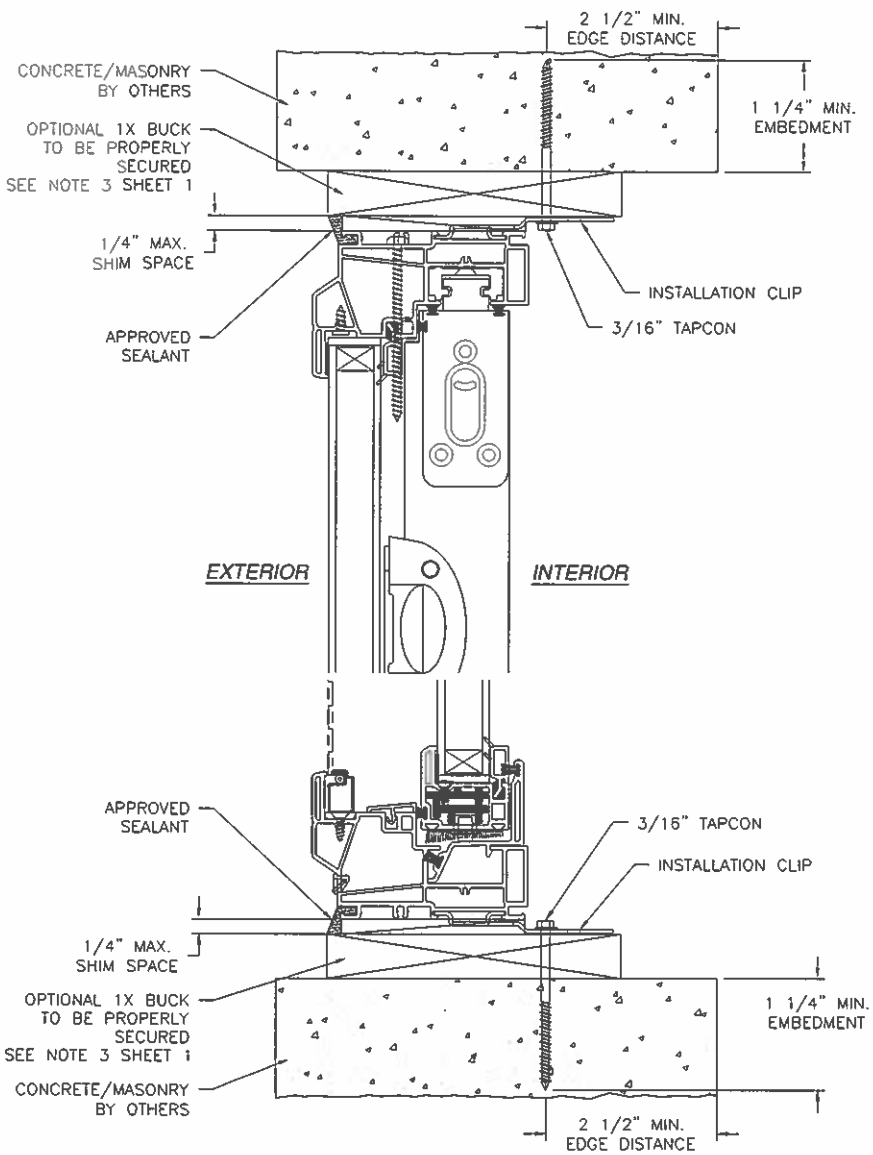

C/7 **SECTION**
STRAP INSTALLATION
CONCRETE/MASONRY

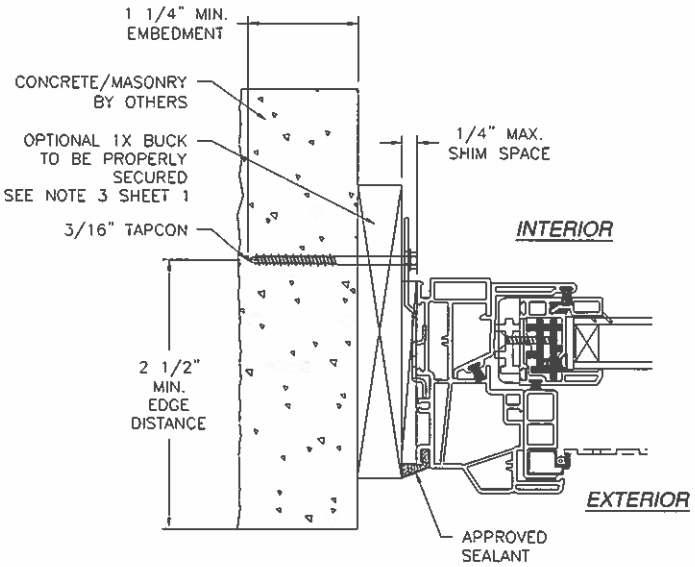

D/7 **SECTION**
STRAP INSTALLATION
CONCRETE/MASONRY

NOTE:
INTERIOR AND EXTERIOR FINISHES, BY OTHERS, NOT SHOWN FOR CLARITY.

SIGNED: 07/26/2013

KOLBE & KOLBE MILLWORK
1211 DEPOT ST
MANAWA, MI 54949

WINDQUEST V707 SINGLE SLIDER
72" x 48" NON-IMPACT
INSTALLATION DETAILS

DRAWN: V.L.	DWG NO. 08-02171	REV –
SCALE NTS	DATE 07/26/13	SHEET 7 OF 9

STATE OF TEXAS
LUIS R. LOMAS
101889
LICENSED
PROFESSIONAL ENGINEER

Luis R. Lomas P.E.
TX No.: 101889

REVISIONS			
REV	DESCRIPTION	DATE	APPROVED

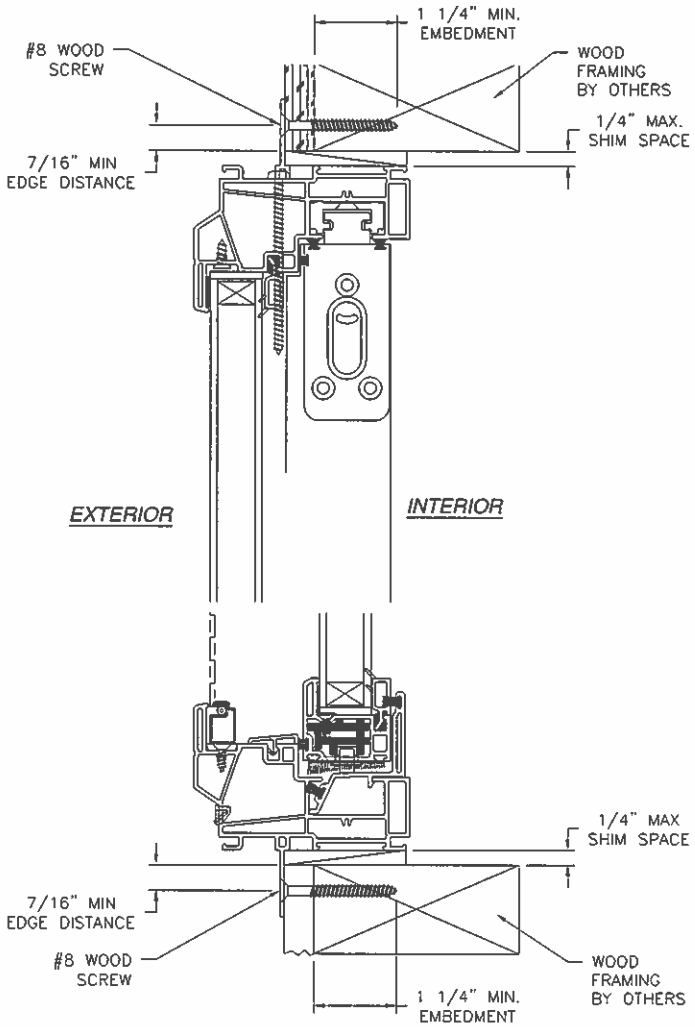

E/8 SECTION
STRAP INSTALLATION
WOOD FRAMING OR 2X BUCK

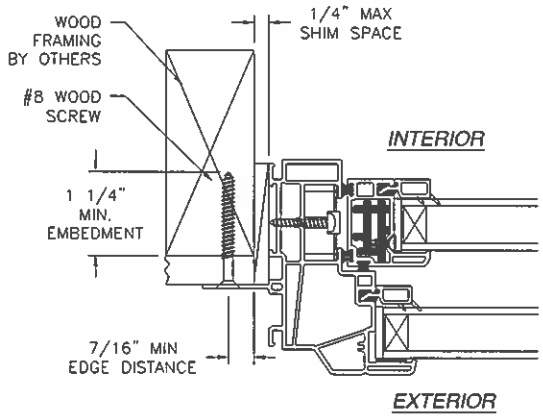

F/8 SECTION
STRAP INSTALLATION
WOOD FRAMING OR 2X BUCK

NOTE:
INTERIOR AND EXTERIOR FINISHES, BY OTHERS, NOT SHOWN FOR CLARITY.

SIGNED: 07/26/2013

KOLBE & KOLBE MILLWORK
1211 DEPOT ST
MANAWA, MI 54949

WINDQUEST V707 SINGLE SLIDER
72" x 48" NON-IMPACT
INSTALLATION DETAILS

DRAWN: V.L.	DWG NO. 08-02171	REV –
SCALE NTS	DATE 07/26/13	SHEET 8 OF 9

STATE OF TEXAS
Luis R. Lomas
101889
LICENSED
PROFESSIONAL ENGINEER

Luis R. Lomas P.E.
TX No.: 101889

REVISIONS			
REV	DESCRIPTION	DATE	APPROVED

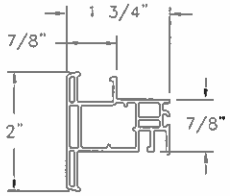

1 MULLION
VINYL PVC .059 THICK

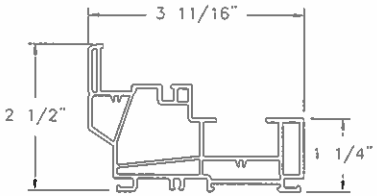

2 FRAME
VINYL PVC .069 THICK

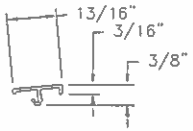

3 SILL COVER
VINYL PVC .051 THICK

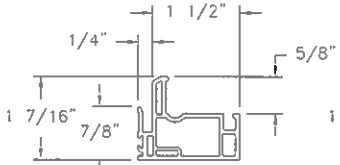

4 SASH INTERLOCK
VINYL PVC .069 THICK

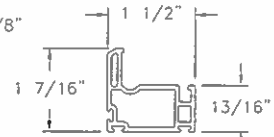

5 SASH FRAME
VINYL PVC .069 THICK

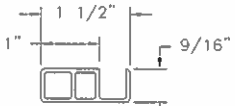

7 JAMB ADAPTER
VINYL PVC .063 THICK

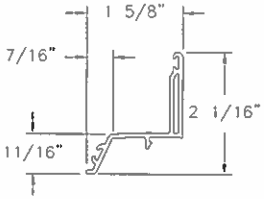

8 SILL ADAPTER
VINYL PVC .069 THICK

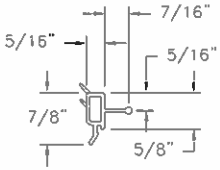

8 7/8" GLAZING BEAD
VINYL PVC .059 THICK

9 SASH STOP
VINYL PVC .047 THICK

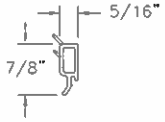

10 7/8" GLAZING BEAD
VINYL PVC .059 THICK

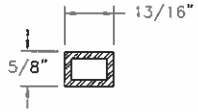

30 MULLION REINFORCEMENT
AL 6063-T5 .118 THICK

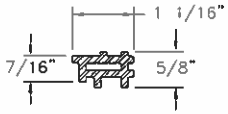

33 SASH REINFORCEMENT
AL 6063-T5 .118 THICK

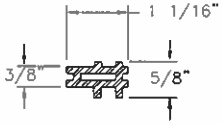

36 RAIL REINFORCEMENT
AL 6063-T5 .118 THICK

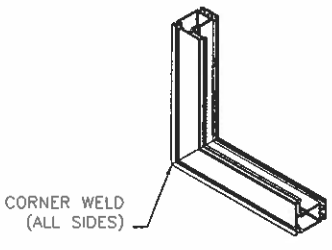

SASH CORNER CONSTRUCTION

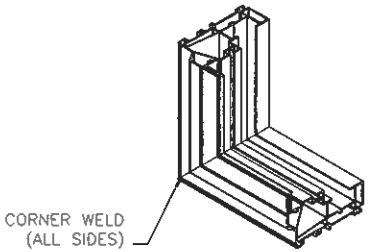

FRAME CORNER CONSTRUCTION

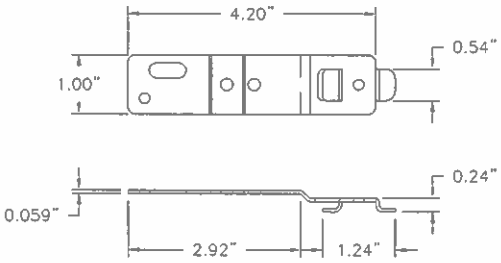

37 INSTALLATION STRIP
GALVANIZED STEEL G60

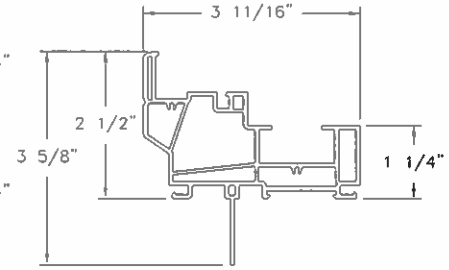

38 FRAME (NAILING FIN)
VINYL PVC .069 THICK

SIGNED: 07/26/2013

KOLBE & KOLBE MILLWORK
1211 DEPOT ST
MANAWA, MI 54949

WINDQUEST V707 SINGLE SLIDER
72" x 48" NON-IMPACT
COMPONENTS

DRAWN: V.L.	DWG NO. 08-02171	REV –
SCALE NTS	DATE 07/26/13	SHEET 9 OF 9

STATE OF TEXAS
LUIS R. LOMAS
101889
LICENSED
PROFESSIONAL ENGINEER

Luis R. Lomas P.E.
TX No.: 101889