GENERAL NOTES:

1. THESE WINDOW SYSTEMS HAVE BEEN TESTED, ANALYZED & APPROVED FOR DESIGN PRESSURES NOT TO EXCEED THOSE SHOWN IN THE "ALLOWABLE DESIGN PRESSURE TABLE(S).
2. OPENINGS, BUCKING & BUCKING FASTENERS MUST BE PROPERLY DESIGNED & INSTALLED TO TRANSFER WIND LOADS TO THE STRUCTURE.
3. ALL HARDWARE & FASTENERS SHALL BE IN ACCORDANCE WITH THESE DRAWINGS & SHALL NOT VARY UNLESS SPECIFICALLY MENTIONED ON THE DRAWINGS. SPECIFIED ANCHOR EMBED TO BASE MATERIAL SHALL BE BEYOND WALL FINISH OR STUCCO.
4. THE DETAILS & SPECIFICATIONS SHOWN HEREIN REPRESENT THE PRODUCTS TESTED & PROPOSED FOR WATER, AIR, IMPACT, CYCLIC & UNIFORM STATIC AIR PRESSURE TESTING IN CONFORMANCE WITH ASTM E330, E283, E331, F588, E1886 & E1996 FOR LARGE MISSILE IMPACT WINDOWS.
5. THESE WINDOW SYSTEMS HAVE BEEN DESIGNED IN ACCORDANCE WITH AND MEET THE REQUIREMENTS OF THE INTERNATIONAL BUILDING CODE (IBC).
6. WHEN GLAZED FOR SMALL MISSILE IMPACT, THESE WINDOWS MAY NOT BE INSTALLED AT ELEVATIONS BELOW 30 FT. ABOVE GRADE OR AT ANY CODE DESIGNATED LARGE MISSILE IMPACT LOCATION WITHOUT AN APPROVED SHUTTER.
7. WHEN LARGE MISSILE IMPACT GLAZED, IMPACT SHUTTERS ARE NOT REQUIRED WITH THESE WINDOWS.
8. ALL ANCHORS SECURING WINDOW FRAME TO PRESSURE TREATED BUCKS OR WOOD FRAMING SHALL BE CAPABLE OF RESISTING CORROSION CAUSED BY THE PRESSURE TREATING CHEMICALS IN THE WOOD.
9. DETERMINE THE POSITIVE & NEGATIVE DESIGN LOADS TO USE WHEN REFERENCING THESE DOCUMENTS IN ACCORDANCE WITH THE GOVERNING CODE AND GOVERNING WIND VELOCITY. FOR WIND LOAD CALCULATIONS IN ACCORDANCE WITH THE INTERNATIONAL BUILDING CODE, A DIRECTIONALITY FACTOR OF KD = 0.85 MAY BE APPLIED PER THE ASCE-7 STANDARD.
10. NO INCREASE IN ALLOWABLE STRESS HAS BEEN USED IN THE CERTIFICATION OF THIS PRODUCT. WIND LOAD DURATION FACTOR CD = 1.6 WAS USED FOR WOOD SCREW ANALYSIS ONLY.
11. MATERIALS, INCLUDING BUT NOT LIMITED TO STEEL SCREWS, THAT COME INTO CONTACT WITH OTHER DISSIMILAR MATERIALS SHALL BE SEPARATED OR COATED AS REQUIRED TO AVOID CORROSION OF EITHER MATERIAL.

THESE DRAWINGS ARE APPLICABLE ONLY TO THE PRODUCT SPECIFIED. THEY MAY NOT BE USED FOR THE ASSEMBLY AND/OR INSTALLATION OF ANY OTHER PRODUCT NOR MAY THEY BE USED FOR RATIONAL AND/OR LOCAL APPROVAL OF ANY PRODUCT NOT PRODUCED BY THE MANUFACTURER STATED ON THESE DRAWINGS.

EVALUATION OF THIS PRODUCT IS BASED ON APPLICABLE STANDARDS AND/OR INFORMATION & RESULTS FROM APPLICABLE TEST REPORTS. THE BUILDING CODE VERSION CONSIDERED WITH THIS EVALUATION WAS THAT IN FORCE AT THE TIME OF THE EVALUATION. IN THE EVENT OF CODE VERSION CHANGES/UPDATES OR IN THE EVENT THAT NEW OR ADDITIONAL TESTING IS COMPLETED ON THIS PRODUCT, PRIOR TO STATING CODE COMPLIANCE, THE MANUFACTURER SHALL CONFIRM WITH THE EVALUATION ENGINEER OF RECORD THAT EVERYTHING SPECIFIED HERE-IN IS CURRENT WITH ALL CURRENT TESTING, CODES AND APPLICABLE STANDARDS.

CORNER CONSTRUCTION:

FRAME: MITERED, JOINED TOGETHER WITH 2 CORNER KEYS (ITEM #21), SECURED WITH (2) M5X20 SCREWS PER CORNER KEY AND SEALED WITH DOW 1199 SEALANT.
RECEPTOR: MITERED, JOINED TOGETHER WITH A CORNER KEY (ITEM #22), SECURED WITH (2) M5X20 SCREWS PER CORNER KEY AND SEALED WITH DOW 1199 SEALANT.
RECEPTOR TO SUB-SILL: RECEPTORS ARE COPED & BUTTED TO THE SUB-SILL AND SEALED WITH DOW 1199 SEALANT.
INTERMEDIATE: COPED, JOINED TOGETHER WITH 2 BRACKETS (ITEM #23), SECURED WITH (1) M5X20 SCREW PER BRACKET AND SEALED WITH DOW 1199 SEALANT.

ALLOWABLE DESIGN PRESSURE (ALL WINDOW CONDITIONS)	
GLASS OPTION 1	+/-90 PSF
GLASS OPTION 2	+/-90 PSF
GLASS OPTION 3	+/-90 PSF
GLASS OPTION 4	+/-90 PSF
GLASS OPTION 5	(1)+/-90 PSF
GLASS OPTION 6	+/-70 PSF
GLASS OPTION 7	+/-90 PSF
GLASS OPTION 8	+/-90 PSF
SEE GLAZING DETAILS FOR GLASS OPTIONS	
1. WHEN GLASS OPTION 5 IS USED, NO FIXED WINDOW SECTION OVER 15 S.F. IN SIZE/AREA MAY BE USED WITH ANY WINDOW UNIT.	

LOCK REQUIREMENTS	
MAX. FRAME WIDTH	LOCK POINTS REQ'D
MULTI-POINT LOCKS	
OVER 44 3/4"	4
44 3/4"	3
29 1/2"	2
CAM LOCKS	
OVER 37 1/2"	3
37 1/2"	2

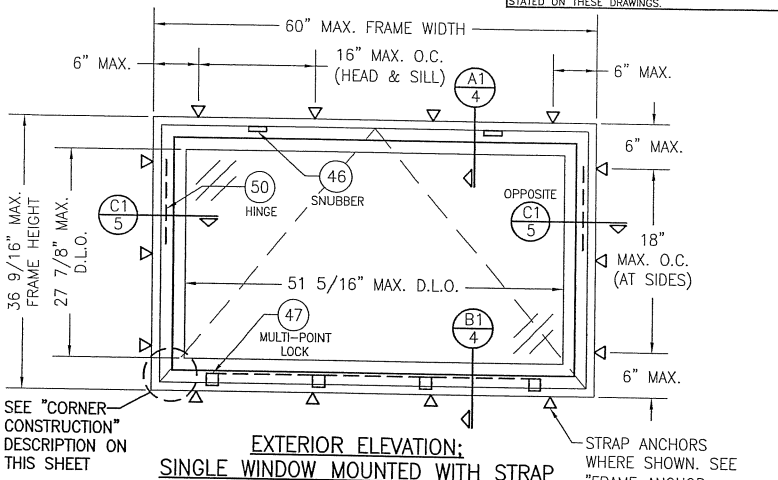

EXTERIOR ELEVATION;
SINGLE WINDOW MOUNTED WITH STRAP ANCHORS
SCALE: 3/4" = 1'-0"
(MULTI-POINT LOCK SHOWN, CAM LOCKS ALSO APPLY)

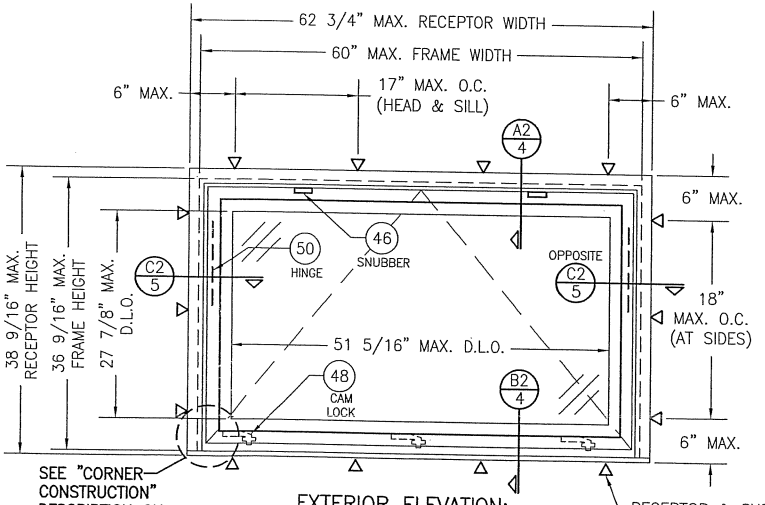

EXTERIOR ELEVATION;
SINGLE WINDOW MOUNTED WITH RECEPTOR & SUB-SULL
SCALE: 3/4" = 1'-0"
(CAM LOCKS SHOWN, MULTI-POINT LOCKS ALSO APPLY)

FRAME ANCHOR REQUIREMENTS TABLE			
STRAP ANCHOR, RECEPTOR, SUB-SILL & MULLION CLIP SCREWS			
OPENING TYPE (SUBSTRATE)	STRAP/RECEPTOR/SUB-SILL/MULLION CLIP TO OPENING FASTENER TYPE	MINIMUM EMBED	MINIMUM EDGE DIST.
MIN. 2X_ WOOD FRAME OR BUCK (MIN. GR. 3 & G=0.55)	NO. 12 SMS OR WOOD SCREW	1 3/8"	3/4"
MIN. 18 GA. 33 KSI METAL STUD	NO. 12 GR. 5 SELF TAP/DRILL SCREW	FULL	1/2"
MIN. 1/8" THK A36 STEEL	NO. 12 GR. 5 SELF TAP/DRILL SCREW	FULL	1/2"
MIN. 0.100" THK 6063-T5 ALUM.	NO. 12 GR. 5 SELF TAP/DRILL SCREW	FULL	1/2"
MIN. C-90 CMU	(1) 1/4" CONCRETE SCREW	1 1/4"	2"
MIN. 2500 PSI CONCRETE	(1) 1/4" CONCRETE SCREW	1 1/2"	2"
(1) CONCRETE SCREWS SHALL BE ELCO ULTRACONS, ELCO CRETE-FLEX, ITW RAMSET/RED HEAD TAPCONS OR HILTI KWIK-CON II (HARDENED STEEL OR S.S.).			

DRAWN BY: W.R.M. | CHECKED BY: W.W.S.
PLOT: 1=16 | DATE: 01/28/13

NO.	REVISION DESCRIPTION	BY	DATE

DRAWING TITLE: AA900 PROJECT-OUT WINDOWS (SMALL & LARGE MISSILE IMPACT)

JOB INFORMATION: KAWNEER COMPANY, INC. 555 GUTHRIDGE COURT NORCROSS, GA 30092 770-449-5555

CONSULTANTS: W. W. SCHAEFER ENGINEERING & CONSULTING, P.A. (REG. NO. F-14980) 7480 150TH COURT NORTH PALM BEACH GARDENS, FL 33418 PHONE: 561-744-3424

CERTIFICATION: NOV 05 2013

STATE OF TEXAS WARREN W. SCHAEFER 113497 LICENSED PROFESSIONAL ENGINEER

WARREN W. SCHAEFER, P.E. P.E. NO. 113497

DRAWING NO. 1690T | REV.

SHEET NO. 1 OF 9

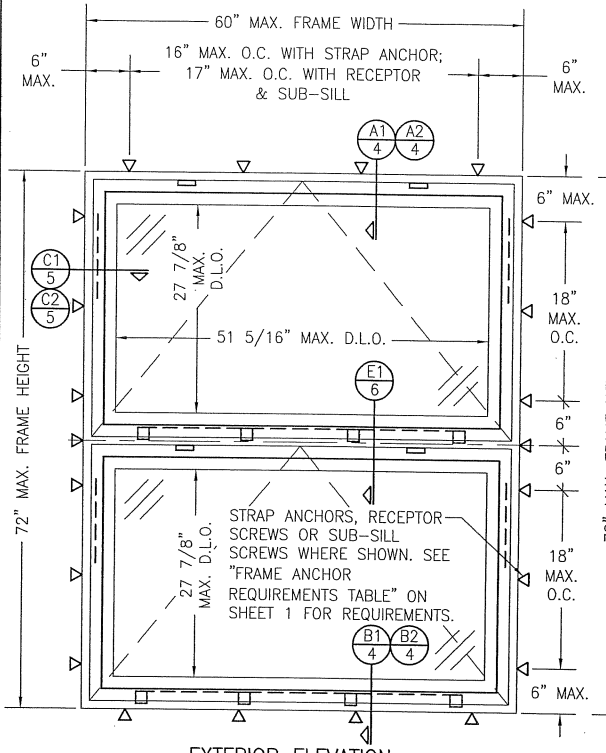

EXTERIOR ELEVATION:
PROJECT-OUT/PROJECT-OUT WINDOW
SCALE: 3/4" = 1'-0"
(MULTI-POINT LOCK SHOWN, CAM LOCKS ALSO APPLY)

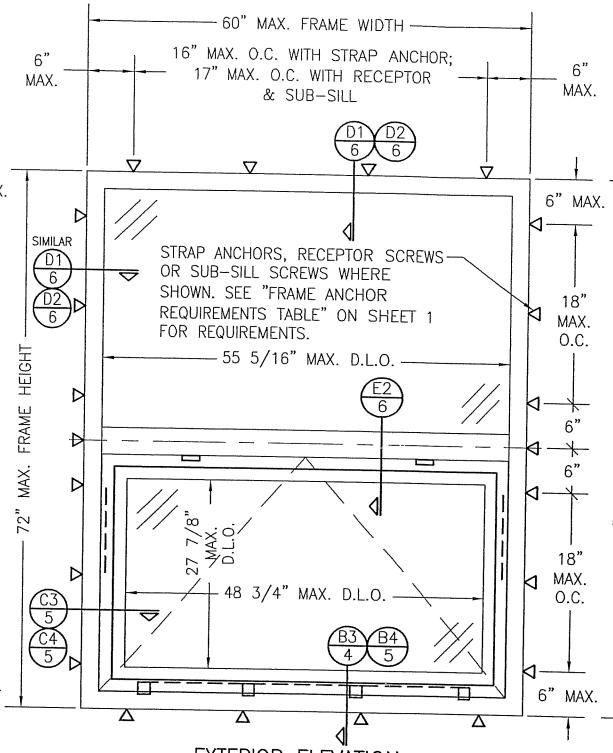

EXTERIOR ELEVATION:
FIXED/PROJECT-OUT WINDOW
SCALE: 3/4" = 1'-0"
(MULTI-POINT LOCK SHOWN, CAM LOCKS ALSO APPLY)

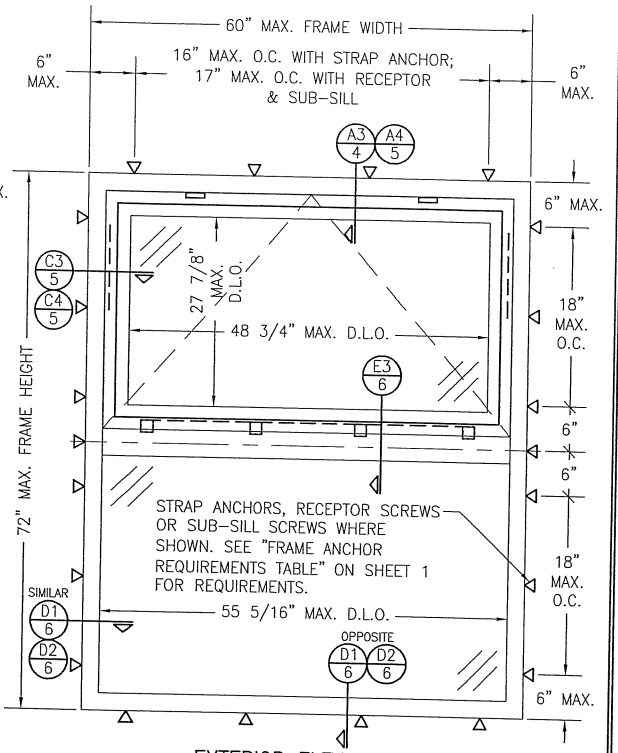

EXTERIOR ELEVATION:
PROJECT-OUT/FIXED WINDOW
SCALE: 3/4" = 1'-0"
(MULTI-POINT LOCK SHOWN, CAM LOCKS ALSO APPLY)

VERTICAL STACKED UNIT NOTES:

1. COMBINATION OF 2 WINDOW SECTIONS/PANELS IN ONE WINDOW FRAME IS SHOWN. MORE THAN 2 SECTIONS/PANELS MAY BE INCORPORATED INTO ONE FRAME PROVIDING THE OVERALL FRAME WIDTH & HEIGHT SHOWN ARE NOT EXCEEDED.
2. INSTALLATION WITHOUT RECEPTOR IS SHOWN. INSTALLATION WITH RECEPTOR ALSO APPLIES.
3. WHEN INSTALLED INTO OPENING WITH A RECEPTOR, THE OPENING SHALL BE SIZED TO ALLOW FOR THE RECEPTOR.
4. D.L.O. HEIGHT OF FIXED WINDOW SECTIONS HAS NO LIMIT EXCEPT AS RESTRICTED BY THE OVERALL SIZE OF THE ENTIRE UNIT.

STATE OF TEXAS
WARREN W. SCHAEFER
113497
LICENSED PROFESSIONAL ENGINEER

DRAWN BY: W.R.M. | CHECKED BY: W.W.S.
PLOT: 1=16 | DATE: 01/28/13

NO.	REVISION DESCRIPTION	BY	DATE

DRAWING TITLE
AA900 PROJECT-OUT WINDOWS (SMALL & LARGE MISSLE IMPACT)

JOB INFORMATION:
KAWNEER COMPANY, INC.
555 GUTHRIDGE COURT
NORCROSS, GA 30092
770-449-5555

CONSULTANTS
W. W. SCHAEFER ENGINEERING & CONSULTING, P.A. (REG. NO. F-14980)
7480 150TH COURT NORTH, JUPITER, FL 33418
PALM BEACH GARDENS, FL 33418
PHONE: 561-744-3424

CERTIFICATION
NOV 25 2013
WARREN W. SCHAEFER P.E.
P.E. NO. 113497

DRAWING NO. 1690T | REV.
SHEET NO. 2 OF 9

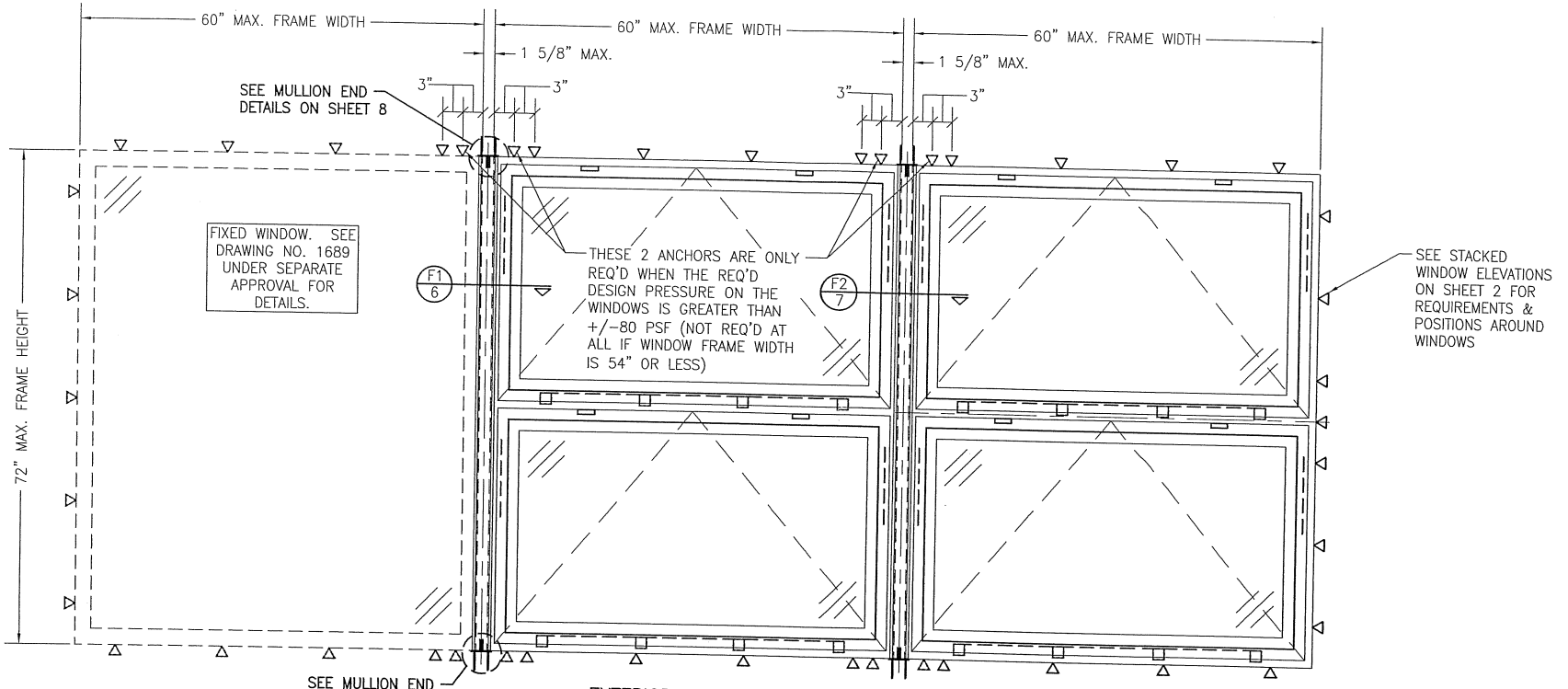

EXTERIOR ELEVATION:
MULTIPLE PROJECT-OUT/FIXED WINDOWS
SCALE: 3/4" = 1'-0"
(MULTI-POINT LOCK SHOWN, CAM LOCKS ALSO APPLY)

HORIZONTAL MULTIPLE UNIT NOTES:

1. STACKED WIDNOWS ARE SHOWN. SINGLE WINDOWS SIDE-BY-SIDE ALSO APPLY.
2. FOR ALL DETAIL NOT SHOWN, SEE SINGLE WINDOW & STACKED WINDOW ELEVATIONS.
3. THERE IS NO LIMIT ON THE NUMBER OF WINDOWS THAT MAY BE COMBINED HORIZONTALLY INTO ONE OPENING PROVIDING THE OPENING IS DESIGNED TO SUPPORT ALL LOADS TRANSFERED FROM THE WINDOWS & THEIR MULLIONS.
4. ANY COMBINATION OF FIXED/PROJECT-OUT WINDOWS IN ONE OPENING SHALL APPLY.

STATE OF TEXAS
WARREN W. SCHAEFER
11497
LICENSED PROFESSIONAL ENGINEER

DRAWN BY: W.R.M.
CHECKED BY: W.W.S.
PLOT: 1=16
DATE: 01/28/13

NO.	REVISION DESCRIPTION	BY	DATE

DRAWING TITLE
AA900 PROJECT-OUT WINDOWS (SMALL & LARGE MISSLE IMPACT)

JOB INFORMATION:
KAWNEER COMPANY, INC.
555 GUTHRIDGE COURT
NORCROSS, GA 30092
770-449-5555

CONSULTANTS
W. W. SCHAEFER ENGINEERING & CONSULTING, P.A. (REG. NO. F-14980)
7480 150TH COURT NORTH
PALM BEACH GARDENS, FL 33418
PHONE: 561-744-3424

CERTIFICATION
NOV 25 2013
WARREN W. SCHAEFER, P.E.
P.E. NO. 11497

DRAWING NO. 1690T
REV.
SHEET NO. 3 OF 9

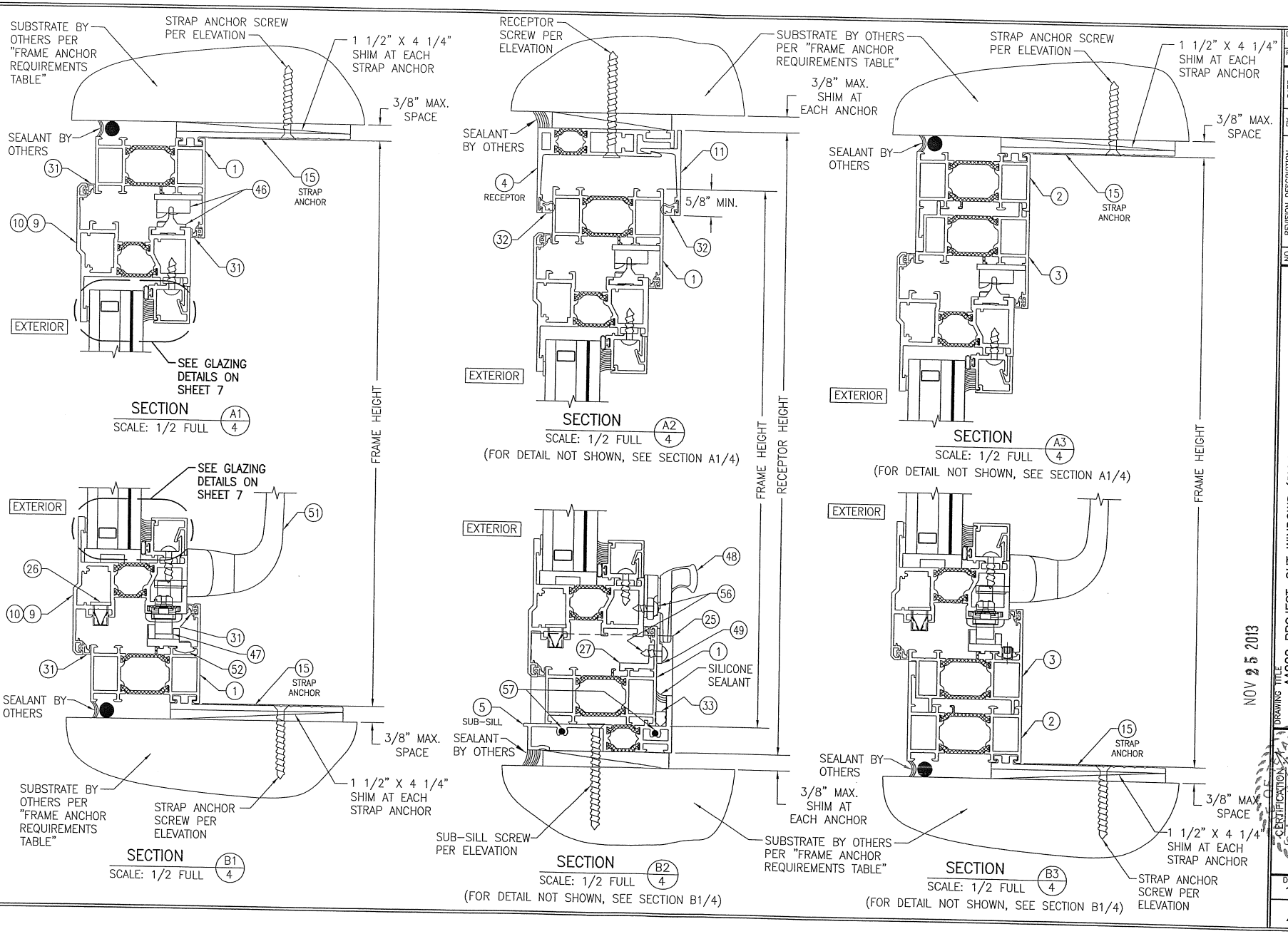

NOV 25 2013

NO.	REVISION DESCRIPTION	BY	DATE

DRAWN BY: W.R.M.
CHECKED BY: W.W.S.
PLOT: 1=2
DATE: 01/28/13

DRAWING TITLE
AA900 PROJECT-OUT WINDOWS (SMALL & LARGE MISSLE IMPACT)

JOB INFORMATION:
KAWNEER COMPANY, INC.
555 GUTHRIDGE COURT
NORCROSS, GA 30092
770-449-5555

CONSULTANTS
W. W. SCHAEFER ENGINEERING & CONSULTING, P.A. (REG. NO. F-14980)
7480 150TH COURT NORTH
PALM BEACH GARDENS, FL 33418
PHONE: 561-744-3424

CERTIFICATION
STATE OF TEXAS
WARREN W. SCHAEFER
WARREN W. SCHAEFER, P.E.
P.E. NO. 113497
LICENSED PROFESSIONAL ENGINEER

DRAWING NO. 1690T
REV.
SHEET NO. 4 OF 9

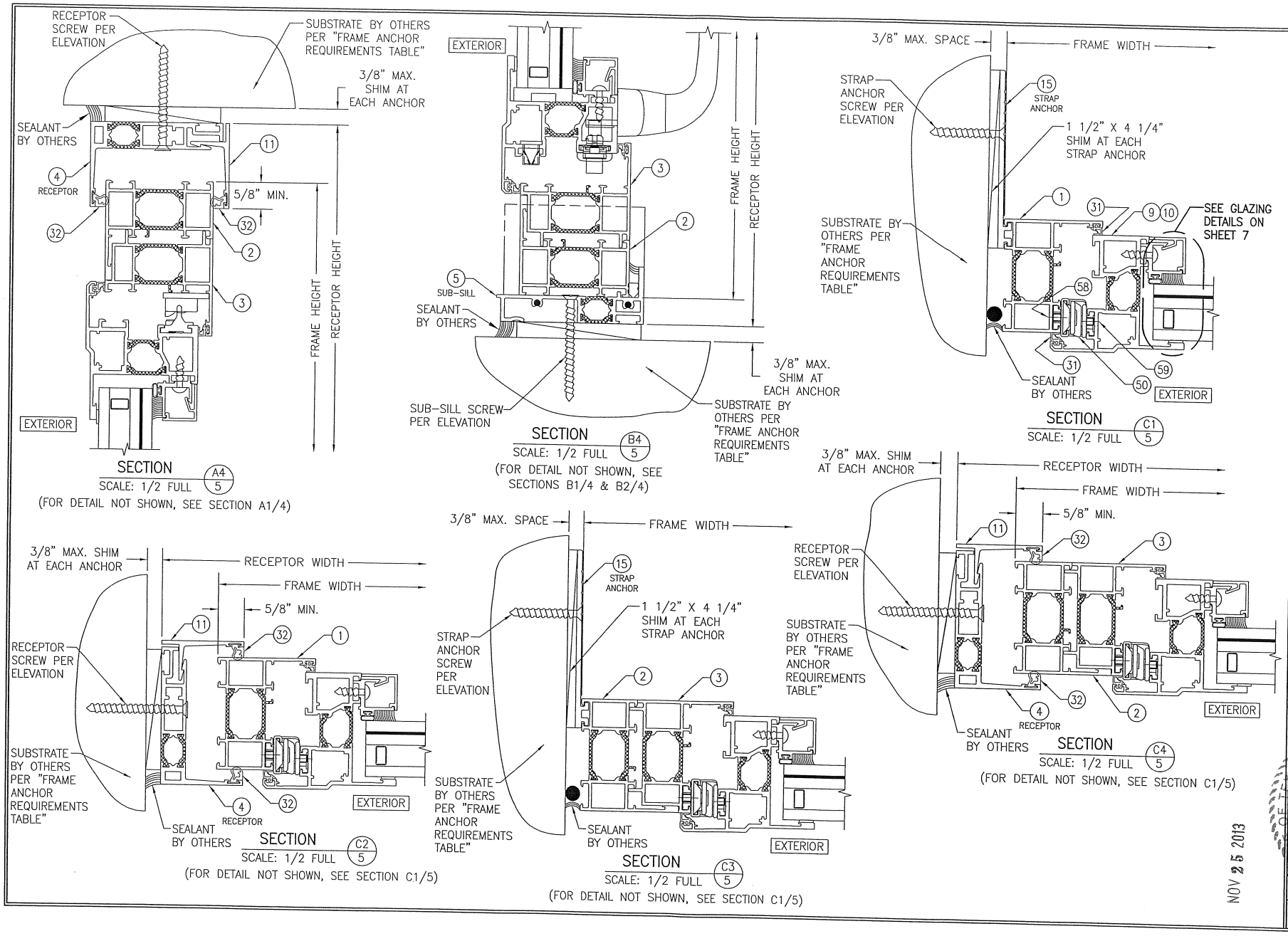

NO.	REVISION DESCRIPTION	BY	DATE

DRAWN BY: W.R.M. | CHECKED BY: W.W.S.
PLOT: 1=2 | DATE: 01/28/13

DRAWING TITLE: AA900 PROJECT-OUT WINDOWS (SMALL & LARGE MISSLE IMPACT)

JOB INFORMATION: KAWNEER COMPANY, INC.
555 GUTHRIDGE COURT
NORCROSS, GA 30092
770-449-5555

CONSULTANTS: W. W. SCHAEFER ENGINEERING & CONSULTING, P.A. (REG. NO. F-14980)
7480 150TH COURT NORTH
PALM BEACH GARDENS, FL 33418
PHONE: 561-744-3424

STATE OF FLORIDA
WARREN W. SCHAEFER
LICENSED PROFESSIONAL ENGINEER

DRAWING NO. 1690T | REV.

SHEET NO. 5 OF 9

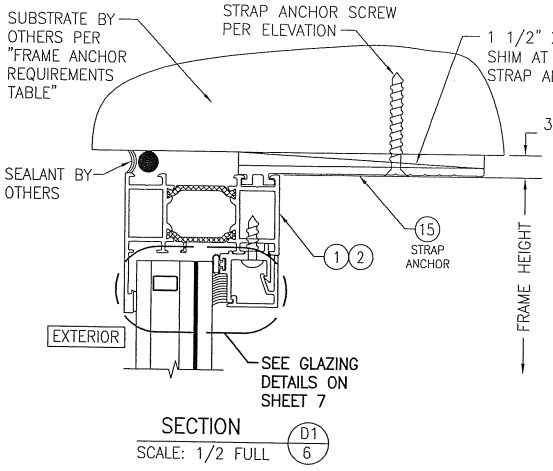

SECTION D1/6
SCALE: 1/2 FULL

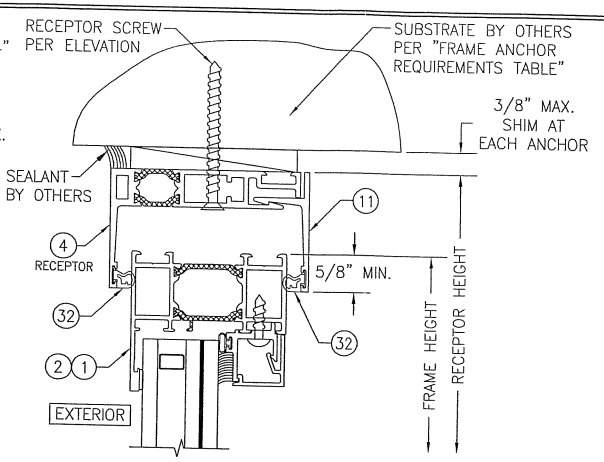

SECTION D2/6
SCALE: 1/2 FULL
(FOR DETAIL NOT SHOWN, SEE SECTION D1/6)

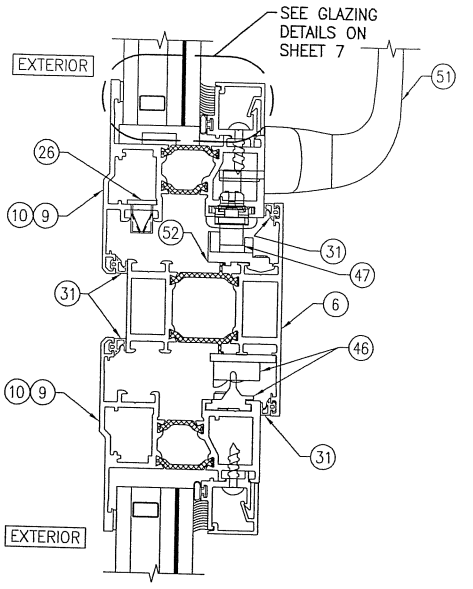

SECTION E1/6
SCALE: 1/2 FULL

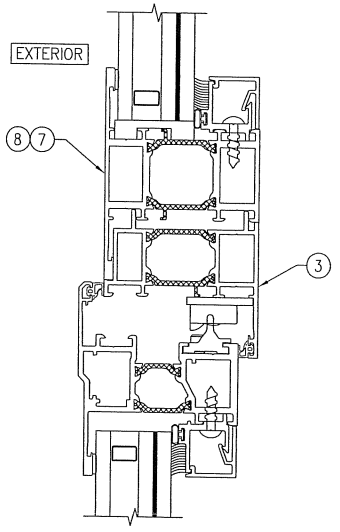

SECTION E2/6
SCALE: 1/2 FULL
(FOR DETAIL NOT SHOWN, SEE SECTION E1/6)

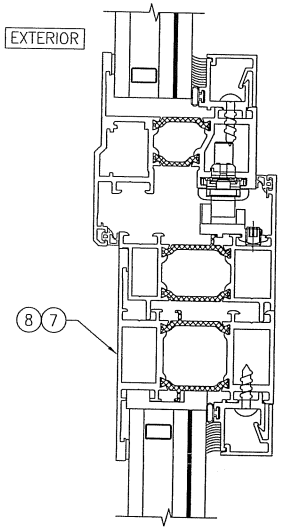

SECTION E3/6
SCALE: 1/2 FULL
(FOR DETAIL NOT SHOWN, SEE SECTION E1/6)

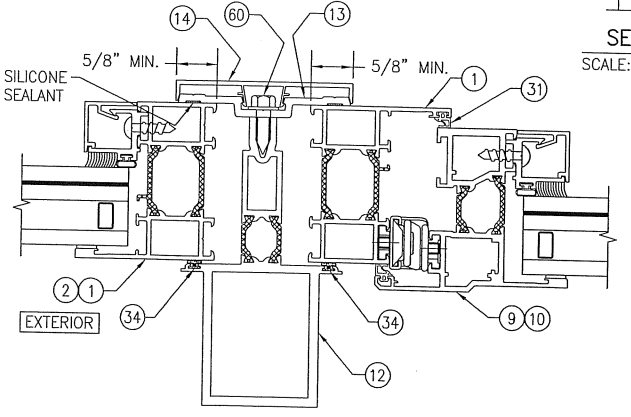

SECTION F1/6
SCALE: 1/2 FULL
(FOR DETAIL NOT SHOWN, SEE OTHER SECTIONS)

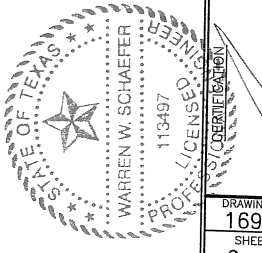

DRAWN BY: W.R.M. | CHECKED BY: W.W.S.
PLOT: 1=2 | DATE: 01/28/13

NO.	REVISION DESCRIPTION	BY	DATE

DRAWING TITLE
AA900 PROJECT-OUT WINDOWS (SMALL & LARGE MISSLE IMPACT)

CONSULTANTS
W. W. SCHAEFER ENGINEERING & CONSULTING, P.A. (REG. NO. F-14980)
7480 150TH COURT NORTH
PALM BEACH GARDENS, FL 33418
PHONE: 561-744-3424

JOB INFORMATION:
KAWNEER COMPANY, INC.
555 GUTHRIDGE COURT
NORCROSS, GA 30092
770-449-5555

CERTIFICATION
NOV 25 2013
WARREN W. SCHAEFER, P.E.
P.E. NO. 111497

DRAWING NO. 1690T | REV.
SHEET NO. 6 OF 9

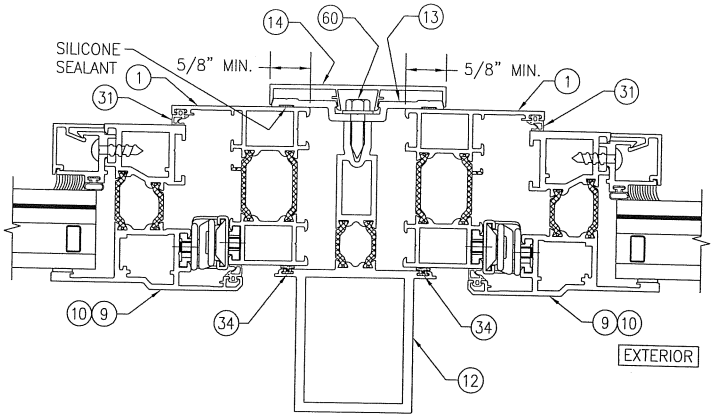

SECTION
SCALE: 1/2 FULL (F2 / 7)

(FOR DETAIL NOT SHOWN, SEE OTHER SECTIONS)

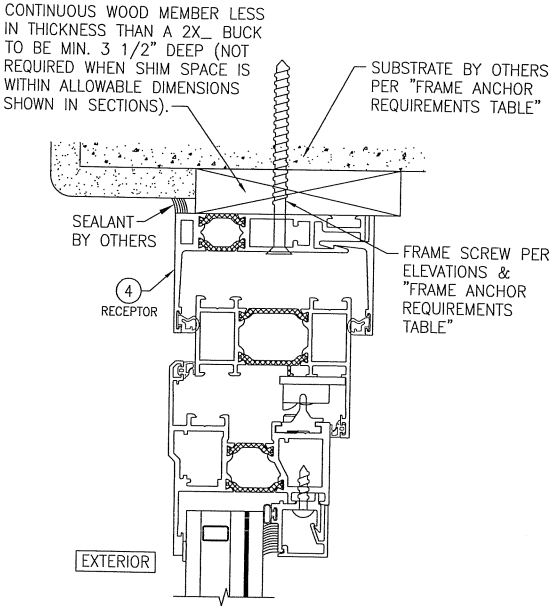

OPTIONAL DIRECT MOUNT DETAIL
TO SUBSTRATE WITH SPACER

(HEAD SECTION SHOWN; SILL & SIDES ARE INSTALLED THE SAME)
(FOR DETAIL NOT SHOWN, SEE OTHER SECTIONS)

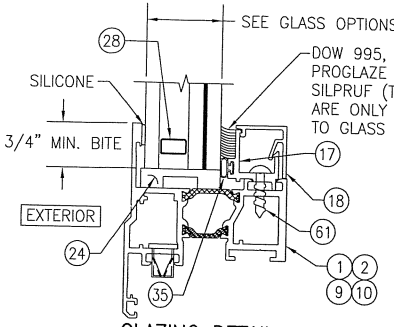

GLAZING DETAIL 1
(L.M.I. GLASS WET GLAZED)
OPTIONS 1–5

GLASS OPTION 1: 1 5/16" LAMINATED I.G. (1/4" TEMPERED; 1/2" AIR SPACER; 1/4" H.S./0.075" SOLUTIA SAFLEX CP/1/4" H.S. INTERIOR)
GLASS OPTION 2: 1 5/16" LAMINATED I.G. (1/4" TEMPERED; 1/2" AIR SPACER; 1/4" H.S./0.090" SOLUTIA SAFLEX HP/1/4" H.S. INTERIOR)
GLASS OPTION 3: 1 5/16" LAMINATED I.G. (1/4" TEMPERED; 1/2" AIR SPACER; 1/4" H.S./0.090" DUPONT BUTACITE PVB/1/4" H.S. INTERIOR)
GLASS OPTION 4: 1 5/16" LAMINATED I.G. (1/4" TEMPERED; 1/2" AIR SPACER; 1/4" H.S./0.090" DUPONT SG/1/4" H.S. INTERIOR)
GLASS OPTION 5: 1 5/16" LAMINATED I.G. (1/4" TEMPERED; 1/2" AIR SPACER; 1/4" H.S./0.120" CYTEC UVEKOL S/1/4" H.S. INTERIOR)

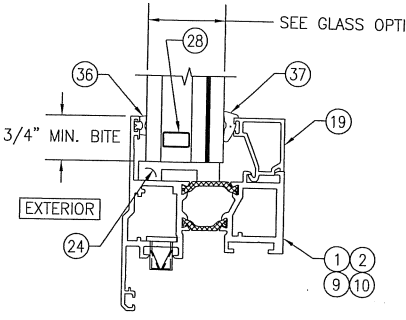

GLAZING DETAIL 2
(L.M.I. GLASS DRY GLAZED)
OPTION 6

GLASS OPTION 6: 1 5/16" LAMINATED I.G. (1/4" TEMPERED; 1/2" AIR SPACER; 1/4" H.S./0.090" DUPONT SG/1/4" H.S. INTERIOR)

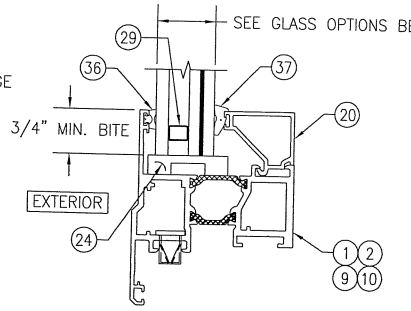

GLAZING DETAIL 3
(S.M.I. GLASS DRY GLAZED)
OPTION 7 & 8

GLASS OPTION 7: 1" LAMINATED I.G. (3/16" TEMPERED; 3/8" AIR SPACER; 3/16" H.S./0.060" SOLUTIA SAFLEX/3/16" H.S. INTERIOR)
GLASS OPTION 8: 1" LAMINATED I.G. (3/16" TEMPERED; 3/8" AIR SPACER; 3/16" H.S./0.060" DUPONT BUTACITE "ST" PVB/3/16" H.S. INTERIOR)

L.M.I. = LARGE MISSILE IMPACT
S.M.I. = SMALL MISSILE IMPACT

STATE OF TEXAS
WARREN W. SCHAEFER
113497
LICENSED PROFESSIONAL ENGINEER

NOV 15 2013

WARREN W. SCHAEFER, P.E.
P.E. NO. 113497

NO.	REVISION DESCRIPTION	BY	DATE

DRAWN BY: W.R.M.
CHECKED BY: W.W.S.
PLOT: 1=2
DATE: 01/28/13

DRAWING TITLE
AA900 PROJECT–OUT WINDOWS (SMALL & LARGE MISSLE IMPACT)

CONSULTANTS
W. W. SCHAEFER ENGINEERING & CONSULTING, P.A. (REG. NO. F–14980)
7480 150TH COURT NORTH
PALM BEACH GARDENS, FL 33418
PHONE: 561–744–3424

JOB INFORMATION:
KAWNEER COMPANY, INC.
555 GUTHRIDGE COURT
NORCROSS, GA 30092
770–449–5555

CERTIFICATION

DRAWING NO. 1690T
REV.
SHEET NO. 7 OF 9

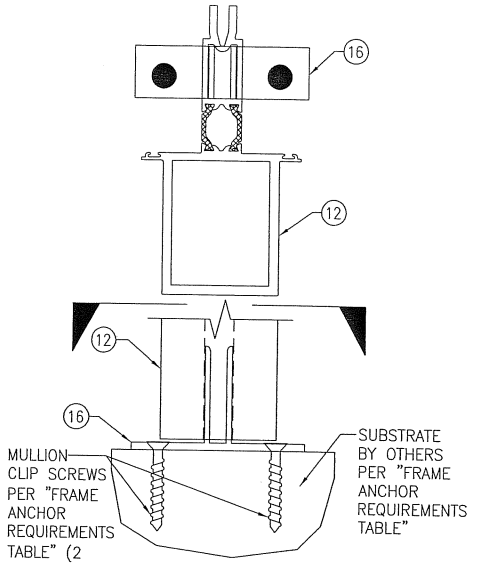

MULLION END DETAIL "A"
(HEAD & SILL W/O RECEPTOR)
(WINDOW FRAMES NOT SHOWN FOR CLARITY)

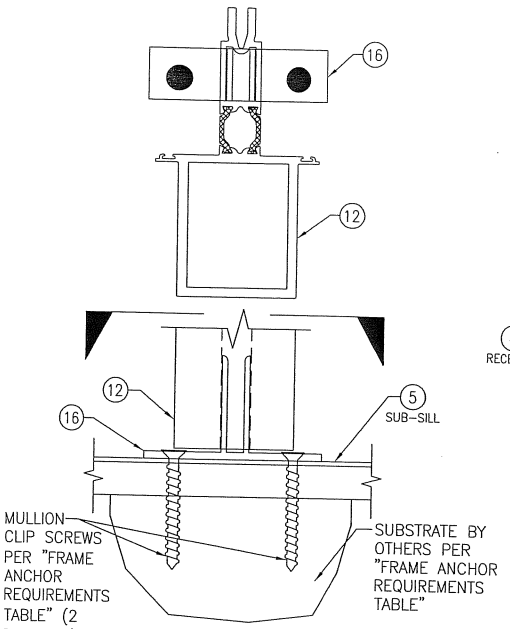

MULLION END DETAIL "B"
(SILL WITH RECEPTOR)
(WINDOW FRAMES NOT SHOWN FOR CLARITY)

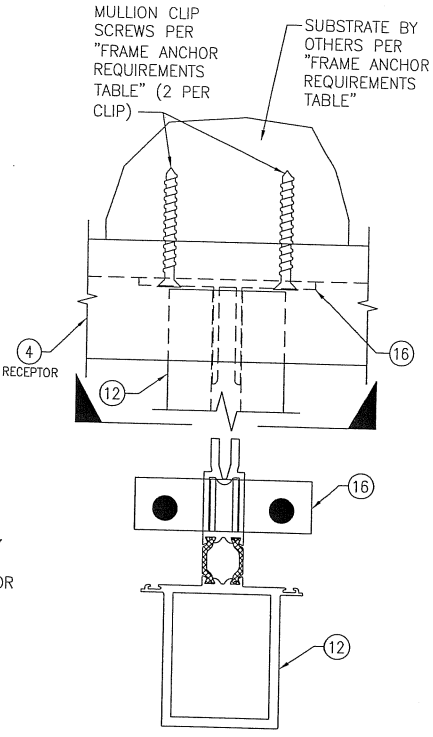

MULLION END DETAIL "C"
(HEAD WITH RECEPTOR)
(WINDOW FRAMES NOT SHOWN FOR CLARITY)

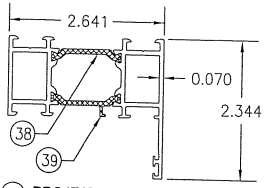

1 PROJECT-OUT: FRAME; FIXED FRAME: FRAME (USED WHEN DRY GLAZED)

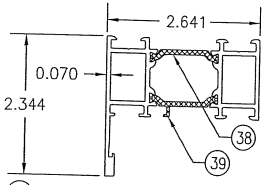

2 PROJECT-OUT: FRAME (USED WHEN A FIXED WINDOW IS OVER OR UNDER A PROJECT-OUT WINDOW); FIXED FRAME: FRAME (USED WHEN DRY GLAZED)

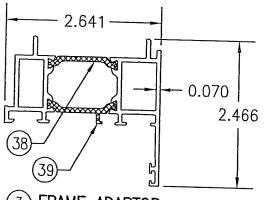

3 FRAME ADAPTOR

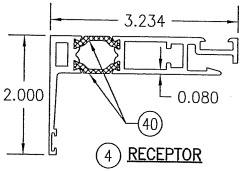

4 RECEPTOR

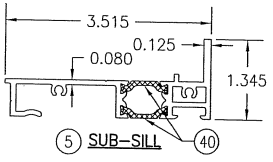

5 SUB-SILL

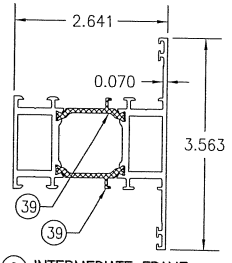

6 INTERMEDIATE FRAME (PROJECT-OUT OVER PROJECT-OUT)

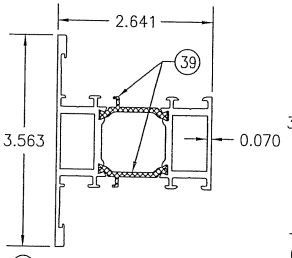

7 INTERMEDIATE FRAME (USED WHEN WET GLAZED) (FIXED OVER PROJECT-OUT OR PROJECT-OUT OVER FIXED)

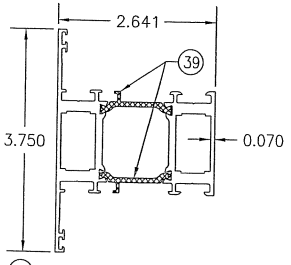

8 INTERMEDIATE FRAME (USED WHEN DRY GLAZED) (FIXED OVER PROJECT-OUT OR PROJECT-OUT OVER FIXED)

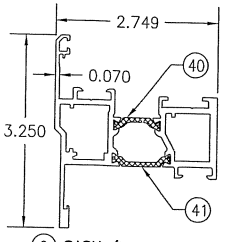

9 SASH (USED WHEN WET GLAZED)

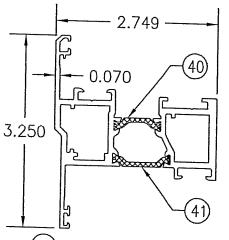

10 SASH (USED WHEN DRY GLAZED)

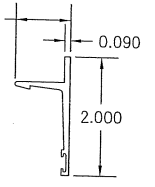

11 RECEPTOR STOP

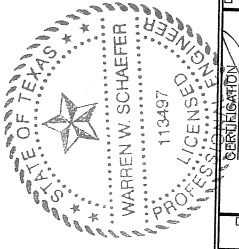

NO.	REVISION DESCRIPTION	BY	DATE

DRAWN BY: W.R.M. | CHECKED BY: W.W.S.
PLOT: 1=2 | DATE: 01/28/13

JOB INFORMATION:
KAWNEER COMPANY, INC.
555 GUTHRIDGE COURT
NORCROSS, GA 30092
770-449-5555

DRAWING TITLE
AA900 PROJECT-OUT WINDOWS (SMALL & LARGE MISSLE IMPACT)

CONSULTANTS
W. W. SCHAEFER ENGINEERING & CONSULTING, P.A. (REG. NO. F-14980)
7480 150TH COURT NORTH
PALM BEACH GARDENS, FL 33418
PHONE: 561-744-3424

CERTIFICATION
NOV 25 2013
WARREN W. SCHAEFER, P.E.
P.E. NO. 113497

DRAWING NO. 1690T | REV.
SHEET NO. 8 OF 9

ITEM #	ITEM DESCRIPTION	MANUFACTURER/NOTES
	PARTS	
1	PROJECT-OUT: FRAME; FIXED FRAME: FRAME (USED WHEN DRY GLAZED)	6063-T6 ALUMINUM
2	PROJECT-OUT: FRAME (USED WHEN A FIXED WINDOW IS OVER OR UNDER A PROJECT-OUT WINDOW); FIXED FRAME: FRAME (USED WHEN DRY GLAZED)	6063-T6 ALUMINUM
3	FRAME ADAPTOR	6063-T6 ALUMINUM
4	RECEPTOR	6063-T6 ALUMINUM
5	SUB-SILL	6063-T6 ALUMINUM
6	INTERMEDIATE FRAME (PROJECT-OUT OVER PROJECT-OUT)	6063-T6 ALUMINUM
7	INTERMEDIATE FRAME (USED WHEN WET GLAZED) (FIXED OVER PROJECT-OUT OR PROJECT-OUT OVER FIXED)	6063-T6 ALUMINUM
8	INTERMEDIATE FRAME (USED WHEN DRY GLAZED) (FIXED OVER PROJECT-OUT OR PROJECT-OUT OVER FIXED)	6063-T6 ALUMINUM
9	SASH (USED WHEN WET GLAZED)	6063-T6 ALUMINUM
10	SASH (USED WHEN DRY GLAZED)	6063-T6 ALUMINUM
11	RECEPTOR STOP	6063-T6 ALUMINUM
12	HD MULLION	6063-T6 ALUMINUM
13	PRESSURE PLATE	6063-T6 ALUMINUM
14	PRESSURE PLATE COVER	6063-T6 ALUMINUM
15	HEAVY DUTY STRAP ANCHOR	6063-T6 ALUMINUM
16	MULLION CLIP	6063-T6 ALUMINUM
17	L.M.I. GLAZING BEAD (USED WHEN WET GLAZED)	6063-T6 ALUMINUM
18	GLAZING BEAD COVER (USED WHEN WET GLAZED)	6063-T6 ALUMINUM
19	L.M.I. GLAZING BEAD (USED WHEN DRY GLAZED)	
20	S.M.I. GLAZING BEAD (USED WHEN DRY GLAZED)	6063-T6 ALUMINUM
21	FRAME CORNER KEY	CAST ALUMINUM
22	RECEPTOR CORNER KEY	CAST ZINC/CARBON STEEL
23	INTERMEDIATE BRACKET	CAST ALUMINUM
24	SETTING BLOCK	EPDM (QTY. AS REQUIRED)
25	3.35" X 2.75" X 0.063" SUB-SILL END DAM PLATE	5052 H32 ALUMINUM
26	WEEP CHECK VALVE KAWNEER #225536	WITHIN 3" OF END & AT MID-SPAN
27	CAMLOCK STRIKE BACKUP PLATE KAWNEER #248423	6063-T6 ALUMINUM
28	1/2" I.G. GLASS SPACER	3005 OR 3105 ALUMINUM
29	3/8" I.G. GLASS SPACER	3005 OR 3105 ALUMINUM
	SEALS & SEALANTS	
31	VENT WEATHERING GASKET	EPDM
32	WEATHERING GASKET	FLEXIBLE PVC BY KRP
33	SEALANT SPACER	SCR-900 BY TREMCO
34	WEATHERING GASKET	POLYPROPYLENE VISTAPLEX
35	BULB GASKET	POLYPROPYLENE
36	FIXED GASKET (70 +/- 5 EPDM RUBBER)	TREMCO TR-14651E
37	WEDGE GASKET (85 DUROMETER EPDM SPONGE)	EPG PART NUMBER 6508-02-00
38	DEBRIDGING/THERMAL BREAK	TECATHERM-66-GF
39	DEBRIDGING/THERMAL BREAK	TECATHERM-66-GF
40	DEBRIDGING/THERMAL BREAK	TECATHERM-66-GF
	HARDWARE	
46	SNUBBER (2 PER WINDOW)	ADVANTAGE MANUFACTURING 939 & 940
47	MULTIPOINT LOCK	GIESSE 01150-371
48	CAMLOCK	BRONZE CRAFT 162-001 OR 162-003
49	CAMLOCK STRIKE	ADVANTAGE MANUFACTURING 6032
50	4-BAR HINGE	ADVANTAGE MANUFACTURING 944-12
51	HANDLE	AS REQ'D TO OPERATE MULTI-POINT LOCK
52	MULTI-POINT STRIKE	ADVANTAGE MANUFACTURING 960

ITEM #	ITEM DESCRIPTION	MANUFACTURER/NOTES
	FASTENERS	
56	NO. 10 X 7/16" FHTF SCREW	4 PER CAMLOK ASSEMBLY
57	NO. 8 X 1 1/4" PHTF S.S. END DAM SCREW	2 PER END INTO SCREW SPLINE
58	NO. 10 X 5/8" FTHTFS SCREW	3 PER HINGE INTO FRAME
59	NO. 10-32 X 1/4" PHMS TORX SCREW	2 PER HINGE INTO SASH
60	1/4" X 3/4" HHTF SCREW	WITHIN 3" OF CORNERS & 9 MAX. O.C.
61	NO. 10 X 3/4" PHTF S.S. SCREW	WITHIN 3" OF CORNERS & 12 MAX. O.C.

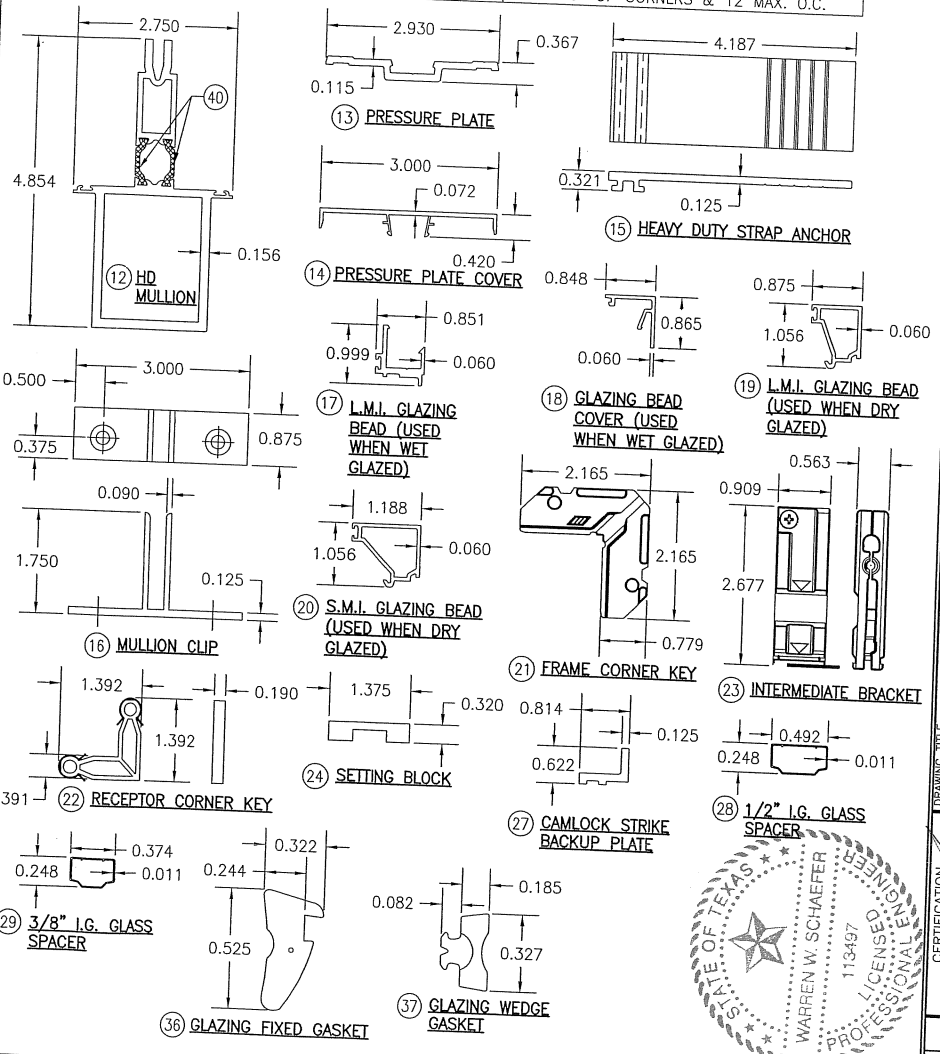

DRAWN BY: W.R.M. | CHECKED BY: W.W.S.
PLOT: 1=2 | DATE: 01/28/13

NO.	REVISION DESCRIPTION	BY	DATE

DRAWING TITLE
AA900 PROJECT-OUT WINDOWS (SMALL & LARGE MISSILE IMPACT)

JOB INFORMATION:
KAWNEER COMPANY, INC.
555 GUTHRIDGE COURT
NORCROSS, GA 30092
770-449-5555

CONSULTANTS
W. W. SCHAEFER ENGINEERING & CONSULTING, P.A. (REG. NO. F-14980)
7480 150TH COURT NORTH
PALM BEACH GARDENS, FL 33418
PHONE: 561-744-3424

CERTIFICATION
NOV 25 2013
WARREN W. SCHAEFER, P.E.
P.E. NO. 113497

DRAWING NO. 1690T | REV.
SHEET NO. 9 OF 9