REVISIONS			
REV	DESCRIPTION	DATE	APPROVED
A	UPDATED FOR SUBMITTAL	06/13/13	R.L.

NOTES:

1. THE PRODUCT SHOWN HEREIN IS DESIGNED AND MANUFACTURED TO COMPLY WITH REQUIREMENTS OF THE INTERNATIONAL BUILDING CODE THE RESIDENTIAL CODE WITH STATE OF THE TEXAS MODIFICATIONS.
2. WOOD FRAMING AND MASONRY OPENING TO BE DESIGNED AND ANCHORED TO PROPERLY TRANSFER ALL LOADS TO STRUCTURE. FRAMING AND MASONRY OPENING IS THE RESPONSIBILITY OF THE ARCHITECT OR ENGINEER OF RECORD.
3. 1X BUCK OVER MASONRY/CONCRETE IS OPTIONAL. WHERE 1X BUCK IS NOT USED DISSIMILAR MATERIALS MUST BE SEPARATED WITH APPROVED COATING OR MEMBRANE. SELECTION OF COATING OR MEMBRANE IS THE RESPONSIBILITY OF THE ARCHITECT OR ENGINEER OF RECORD.
4. ALLOWABLE STRESS INCREASE OF 1/3 WAS NOT USED IN THE DESIGN OF THE PRODUCT SHOWN HEREIN. WIND LOAD DURATION FACTOR Cd=1.6 WAS USED FOR WOOD ANCHOR CALCULATIONS.
5. FRAME MATERIAL: EXTRUDED RIGID PVC.
6. UNITS MUST BE GLAZED PER ASTM E1300-04, SEE SHEET 2 FOR GLASS DETAIL.
7. APPROVED IMPACT PROTECTIVE SYSTEM <u>IS NOT REQUIRED</u> FOR THIS PRODUCT IN WIND BORNE DEBRIS REGIONS.
8. SHIM AS REQUIRED AT EACH INSTALLATION ANCHOR WITH LOAD BEARING SHIM. SHIM WHERE SPACE OF 1/16" OR GREATER OCCURS. MAXIMUM ALLOWABLE SHIM STACK TO BE 1/4".
9. FOR ANCHORING INTO WOOD FRAMING OR 2X BUCK USE #10 WOOD SCREWS WITH SUFFICIENT LENGTH TO ACHIEVE A 1 1/4" MINIMUM EMBEDMENT INTO SUBSTRATE. LOCATE ANCHORS AS SHOWN IN ELEVATIONS AND INSTALLATION DETAILS.
10. FOR ANCHORING INTO MASONRY/CONCRETE USE 3/16" TAPCONS WITH SUFFICIENT LENGTH TO ACHIEVE A 1 1/4" MINIMUM EMBEDMENT INTO SUBSTRATE WITH 2 1/2'' MINIMUM EDGE DISTANCE. LOCATE ANCHORS AS SHOWN IN ELEVATIONS AND INSTALLATION DETAILS.
11. FOR ANCHORING INTO METAL STRUCTURE USE #10 SMS OR SELF DRILLING SCREWS WITH SUFFICIENT LENGTH TO ACHIEVE 3 THREADS MINIMUM BEYOND STRUCTURE INTERIOR WALL. LOCATE ANCHORS AS SHOWN IN ELEVATIONS AND INSTALLATION DETAILS.
12. ALL FASTENERS TO BE CORROSION RESISTANT.
13. INSTALLATION ANCHORS SHALL BE INSTALLED IN ACCORDANCE WITH ANCHOR MANUFACTURER'S INSTALLATION INSTRUCTIONS AND ANCHORS SHALL NOT BE USED IN SUBSTRATES WITH STRENGTHS LESS THAN THE MINIMUM STRENGTH SPECIFIED BELOW:
    A. WOOD – MINIMUM SPECIFIC GRAVITY OF G=0.42
    B. CONCRETE – MINIMUM COMPRESSIVE STRENGTH OF 3,192 PSI.
    C. MASONRY – STRENGTH CONFORMANCE TO ASTM C-90, GRADE N, TYPE 1 (OR GREATER).
    D. METAL STRUCTURE: STEEL 18GA, 33KSI OR ALUMINUM 6063-T5 1/8" THICK MINIMUM

SIGNED: 06/18/2013

TABLE OF CONTENTS

SHEET NO.	DESCRIPTION
1	NOTES
2	ELEVATION & GLAZING DETAIL
3	B.O.M. & CROSS SECTIONS
4 – 5	INSTALLATION DETAILS
6	COMPONENTS AND GLAZING DETAIL

WinDoor INCORPORATED
7500 AMSTERDAM DRIVE
ORLANDO, FL 32832
Phone: 407.481.8400
Fax: 407.481.0505
www.windoorinc.com

V-470 PVC HORIZONTAL ROLLING WINDOW XOX
136" x 24" REINFORCED IMPACT
NOTES

DRAWN:	DWG NO.	REV
V.L.	08-01961	A

SCALE	DATE	SHEET
NTS	04/22/13	1 OF 6

STATE OF TEXAS
LUIS R. LOMAS
101889
LICENSED
PROFESSIONAL ENGINEER

Luis R. Lomas P.E.
TX No.: 101889

REVISIONS			
REV	DESCRIPTION	DATE	APPROVED
A	UPDATED FOR SUBMITTAL	06/13/13	R.L.

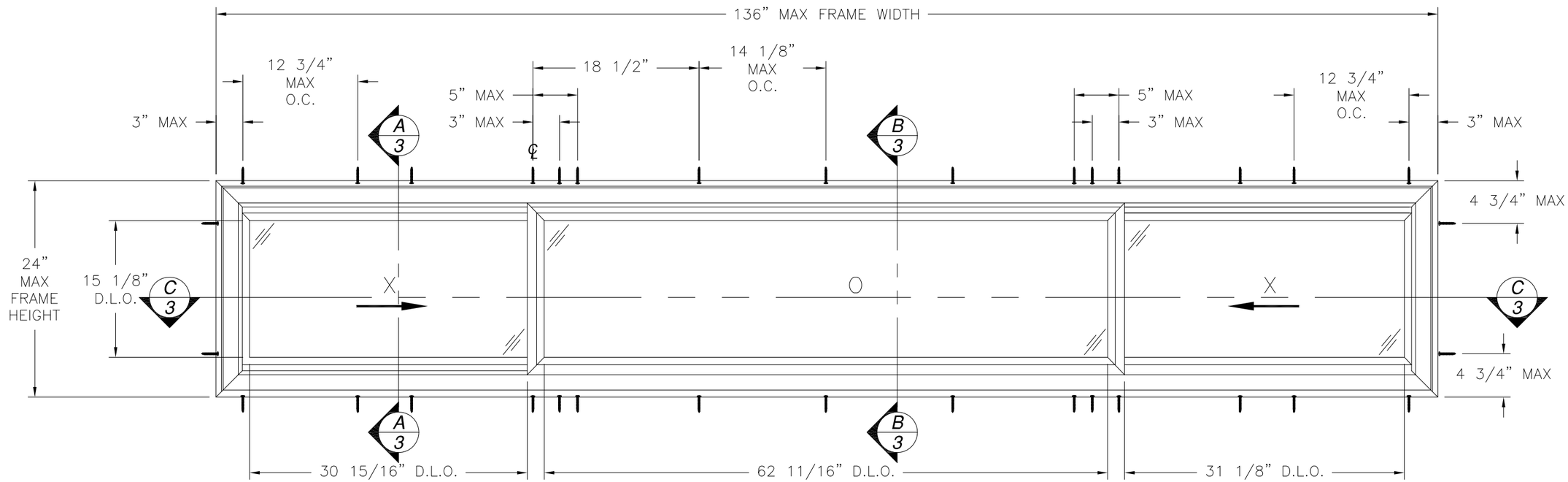

V-470 PVC HORIZONTAL ROLLING WINDOW XOX

EXTERIOR VIEW

DESIGN PRESSURE RATING	IMPACT RATING
±80.0PSF	LARGE AND SMALL MISSILE IMPACT

MISSILE LEVEL D, WIND ZONE 4

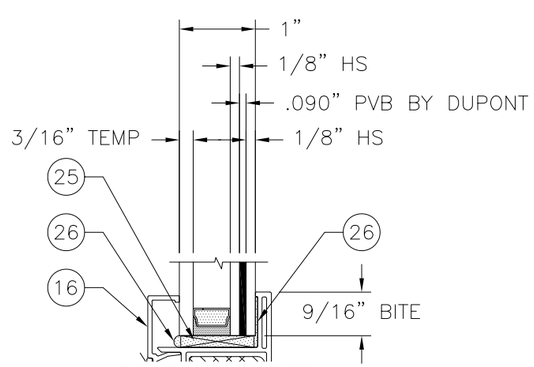

GLAZING DETAIL

SIGNED: 06/18/2013

WinDoor INCORPORATED
7500 AMSTERDAM DRIVE
ORLANDO, FL 32832
Phone: 407.481.8400
Fax: 407.481.0505
www.windoorinc.com

V-470 PVC HORIZONTAL ROLLING WINDOW XOX
136" x 24" REINFORCED IMPACT
ELEVATION

DRAWN:	DWG NO.	REV
V.L.	08-01961	A
SCALE NTS	DATE 04/22/13	SHEET 2 OF 6

STATE OF TEXAS
LUIS R. LOMAS
101889
LICENSED
PROFESSIONAL ENGINEER

Luis R. Lomas P.E.
TX No.: 101889

ITEM NO.:	PART NUMBER	DESCRIPTION	MANUFACTURER	MATERIAL
1	DS9301	FRAME	VEKA	RIGID PVC
2	SE9341	TOP RAIL	VEKA	RIGID PVC
3	SE9345	BOTTOM RAIL & JAMB	VEKA	RIGID PVC
4	SE9344	MEETING STILE	VEKA	RIGID PVC
5	SE9346	LOCK STILE	VEKA	RIGID PVC
6	V400-WH-KEEPER	KEEPER	VEKA	RIGID PVC
7	S51852	SILL TRACK	KEYMARK	ALUMINUM 6063-T6
8	ACADS9301	FRAME IMPACT ADAPTOR CLIP	KEYMARK	ALUMINUM 6063-T6
9	ACADS9341	SASH IMPACT ADAPTOR CLIP	KEYMARK	ALUMINUM 6063-T6
10	FS07754	TOP RAIL REINFORCEMENT	KEYMARK	ALUMINUM 6063-T6
11	FS07142	EXT. MEETING RAIL REINF.	KEYMARK	ALUMINUM 6063-T6
12	FS07141	MEETING STILE & JAMB STILE REINF.	KEYMARK	ALUMINUM 6063-T6
13	FS07143	LOCK STILE REINFORCEMENT	KEYMARK	ALUMINUM 6063-T6
14	V470-SS-ROHOU	ROLLER/HOUSING ASSEMBLY		
15	WD3-WH-168V	SLOPPED CHANNEL COVER	MOR-X	RIGID PVC
16	BV137	1" GLAZING BEAD	VEKA	RIGID PVC
17	S4000-XX-150	SCREEN FRAME	ROLLFORM	
18	S10010-BL-2200R	SCREEN SPLINE	ROLLFORM	
19	SBV-XX-0600Z	SCREEN CLOTH	ROLLFORM	
20	54080-ML-FB11	SCREEN CORNER KEY	ROLLFORM	
21	121999	0.187"x0.270" WEATHERSTRIPPING	ULTRAFAB	
22	122003	0.187"x0.350" WEATHERSTRIPPING	ULTRAFAB	
23		#8x1" SCREW		
24	V400-WH-9227	METAL CAM LOCK & KEEPER	VISION	
25	01-100-7755-002	SETTING BLOCK	FRANK LOWE	NEOPRENE 80 DURO
26	SIKAFLEX 552	POLYURETHANE	SIKA	

REVISIONS			
REV	DESCRIPTION	DATE	APPROVED
A	UPDATED FOR SUBMITTAL	06/13/13	R.L.

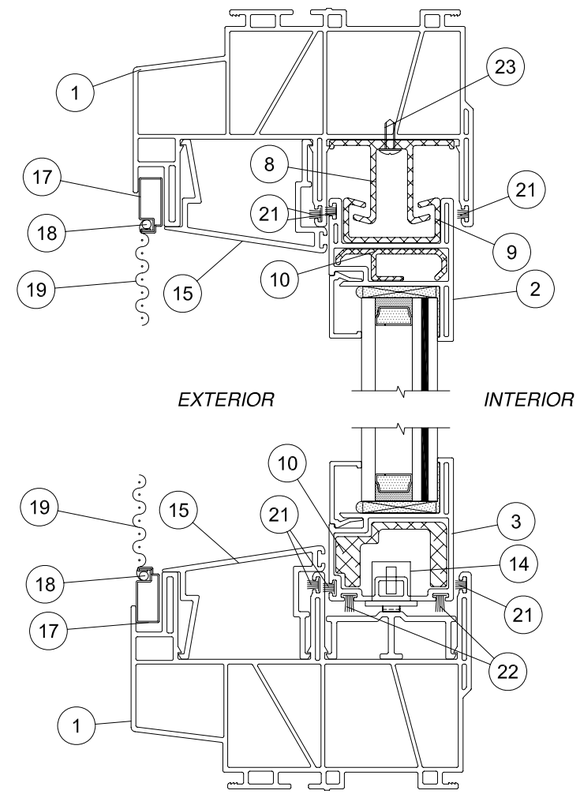

A/3 VERTICAL CROSS SECTION

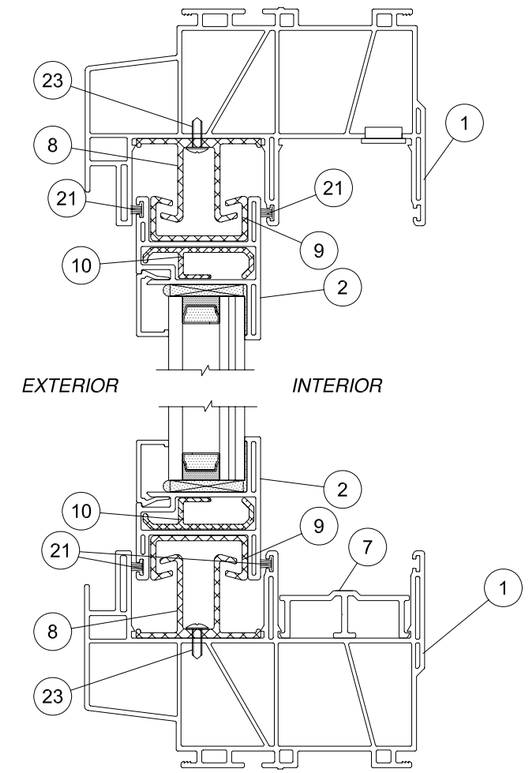

B/3 VERTICAL CROSS SECTION

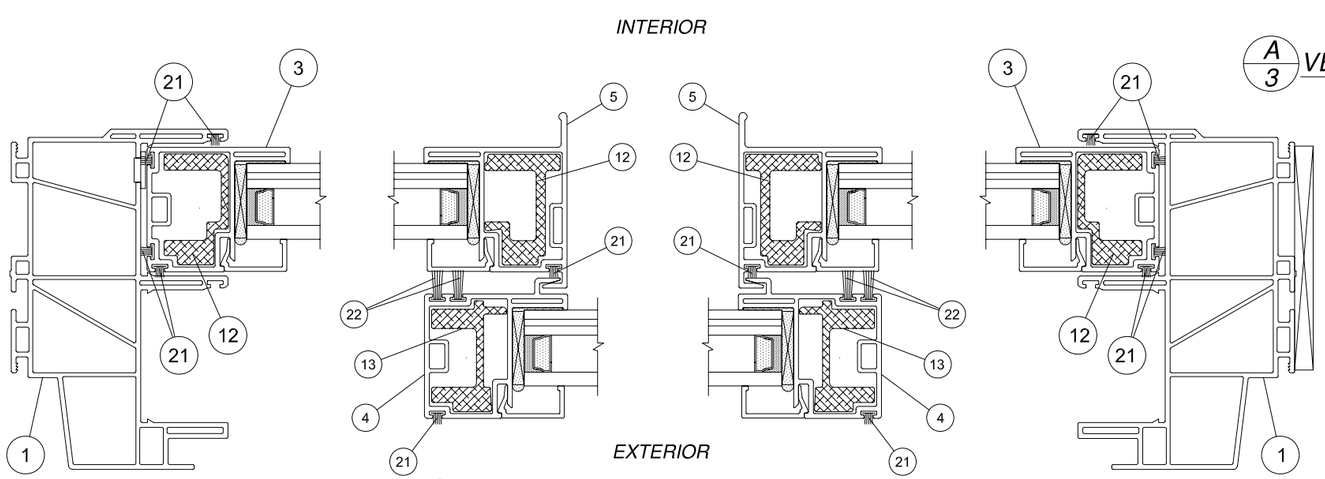

C/3 HORIZONTAL CROSS SECTION

SIGNED: 06/18/2013

WinDoor INCORPORATED
7500 AMSTERDAM DRIVE
ORLANDO, FL 32832
Phone: 407.481.8400
Fax: 407.481.0505
www.windoorinc.com

V-470 PVC HORIZONTAL ROLLING WINDOW XOX
136" x 24" REINFORCED IMPACT
CROSS SECTIONS

DRAWN:	DWG NO.	REV
V.L.	08-01961	A

SCALE	DATE	SHEET
NTS	04/22/13	3 OF 6

STATE OF TEXAS
LUIS R. LOMAS
101889
LICENSED
PROFESSIONAL ENGINEER

Luis R. Lomas P.E.
TX No.: 101889

REVISIONS			
REV	DESCRIPTION	DATE	APPROVED
A	UPDATED FOR SUBMITTAL	06/13/13	R.L.

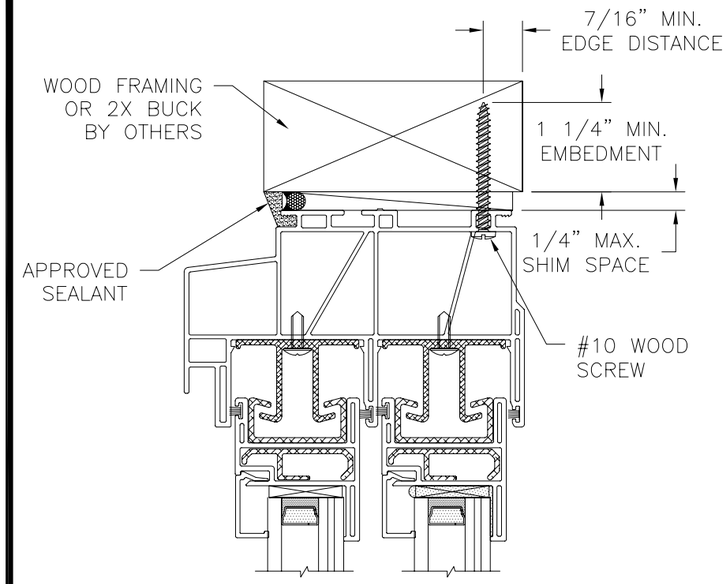

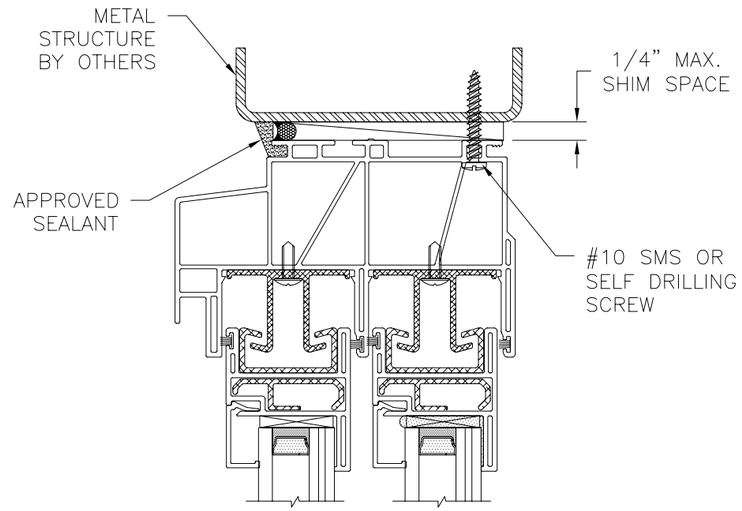

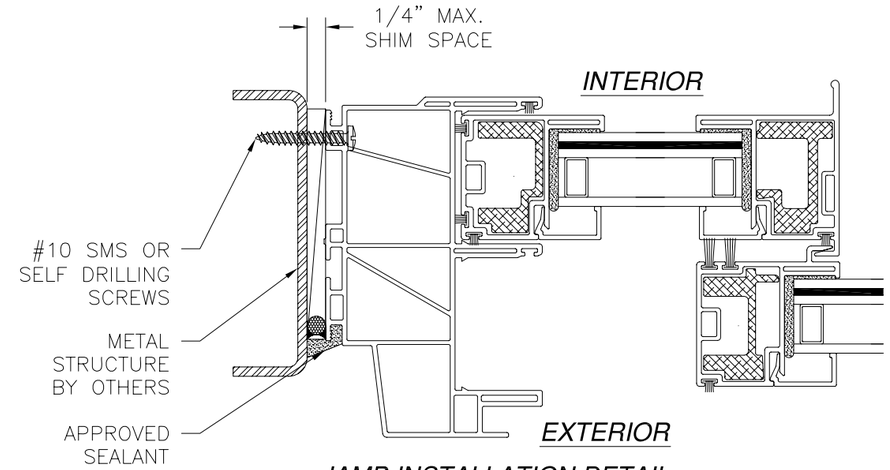

JAMB INSTALLATION DETAIL
METAL STRUCTURE INSTALLATION

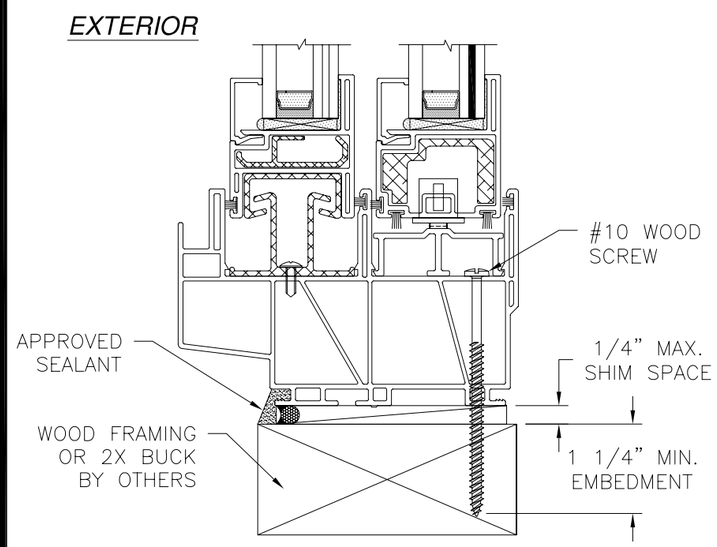

VERTICAL CROSS SECTION
WOOD FRAMING OR 2X BUCK INSTALLATION

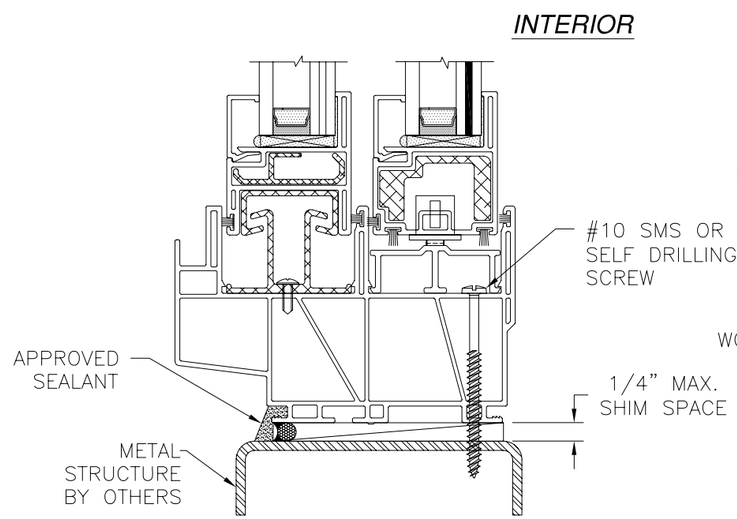

VERTICAL CROSS SECTION
METAL STRUCTURE INSTALLATION

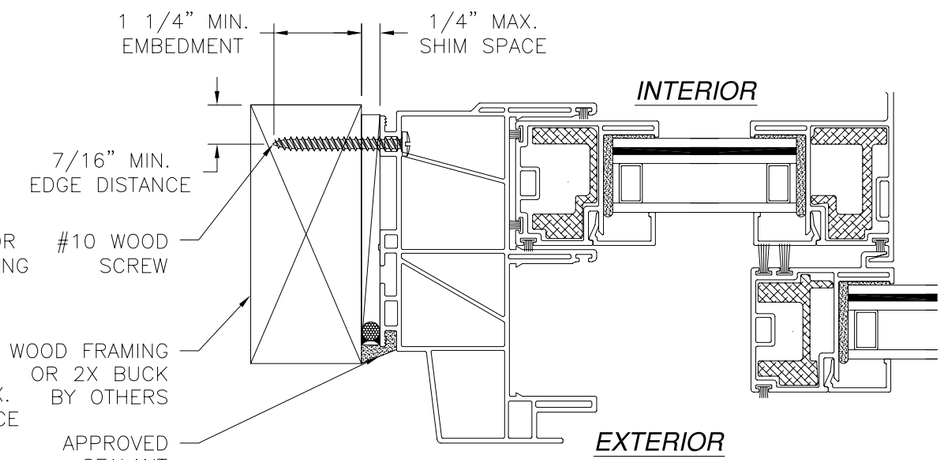

JAMB INSTALLATION DETAIL
WOOD FRAMING OR 2X BUCK INSTALLATION

NOTE:
1. INTERIOR AND EXTERIOR FINISHES, BY OTHERS, NOT SHOWN FOR CLARITY.
2. PERIMETER AND JOINT SEALANT BY OTHERS TO BE DESIGNED IN ACCORDANCE WITH ASTM E2112

SIGNED: 06/18/2013

WinDoor INCORPORATED
7500 AMSTERDAM DRIVE
ORLANDO, FL 32832
Phone: 407.481.8400
Fax: 407.481.0505
www.windoorinc.com

V-470 PVC HORIZONTAL ROLLING WINDOW XOX
136" x 24" REINFORCED IMPACT
INSTALLATION DETAILS

DRAWN:	DWG NO.	REV
V.L.	08-01961	A
SCALE NTS	DATE 04/22/13	SHEET 4 OF 6

STATE OF TEXAS
LUIS R. LOMAS
101889
LICENSED
PROFESSIONAL ENGINEER

Luis R. Lomas P.E.
TX No.: 101889

REVISIONS			
REV	DESCRIPTION	DATE	APPROVED
A	UPDATED FOR SUBMITTAL	06/13/13	R.L.

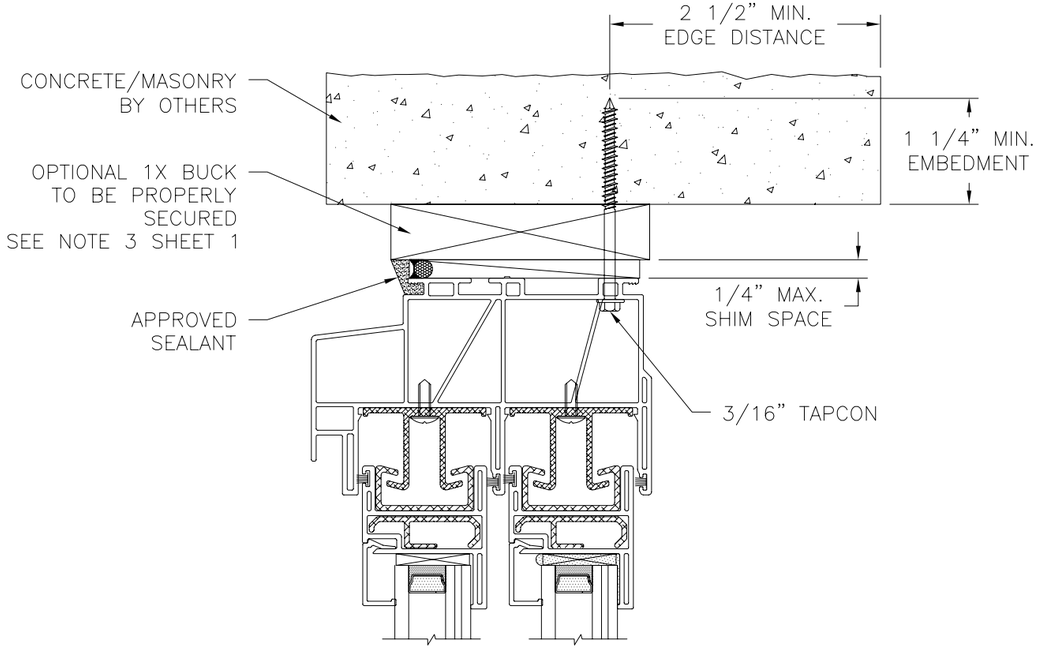

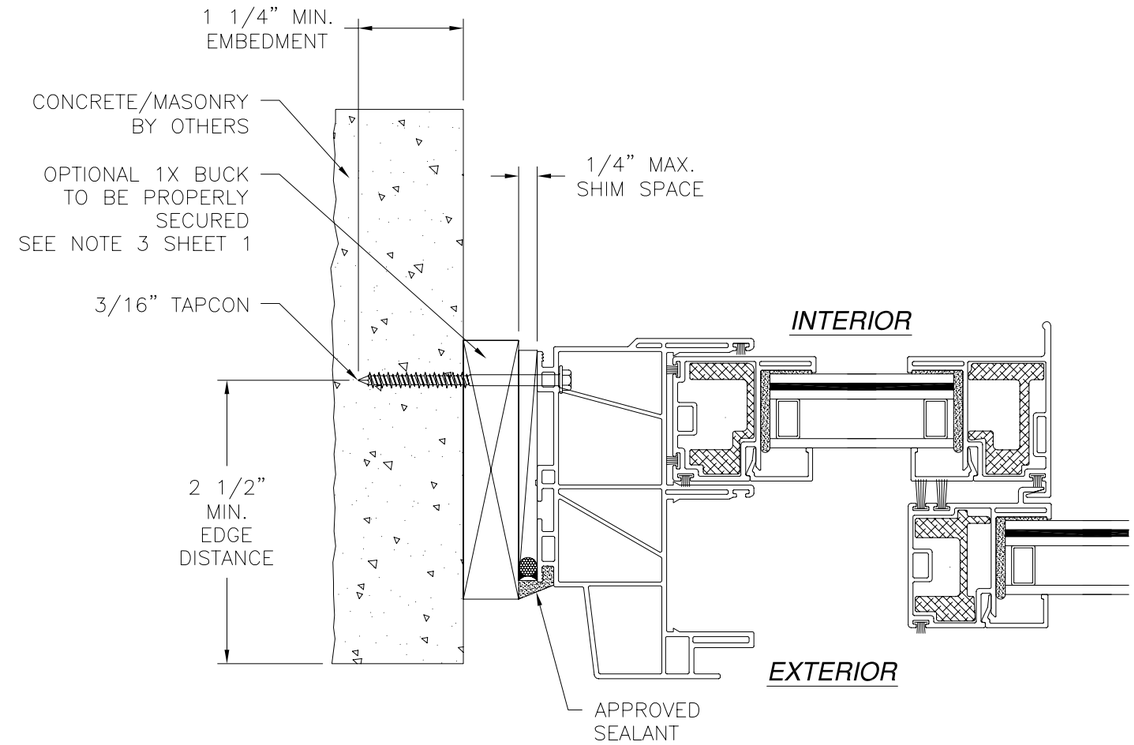

JAMB INSTALLATION DETAIL

CONCRETE/MASONRY INSTALLATION

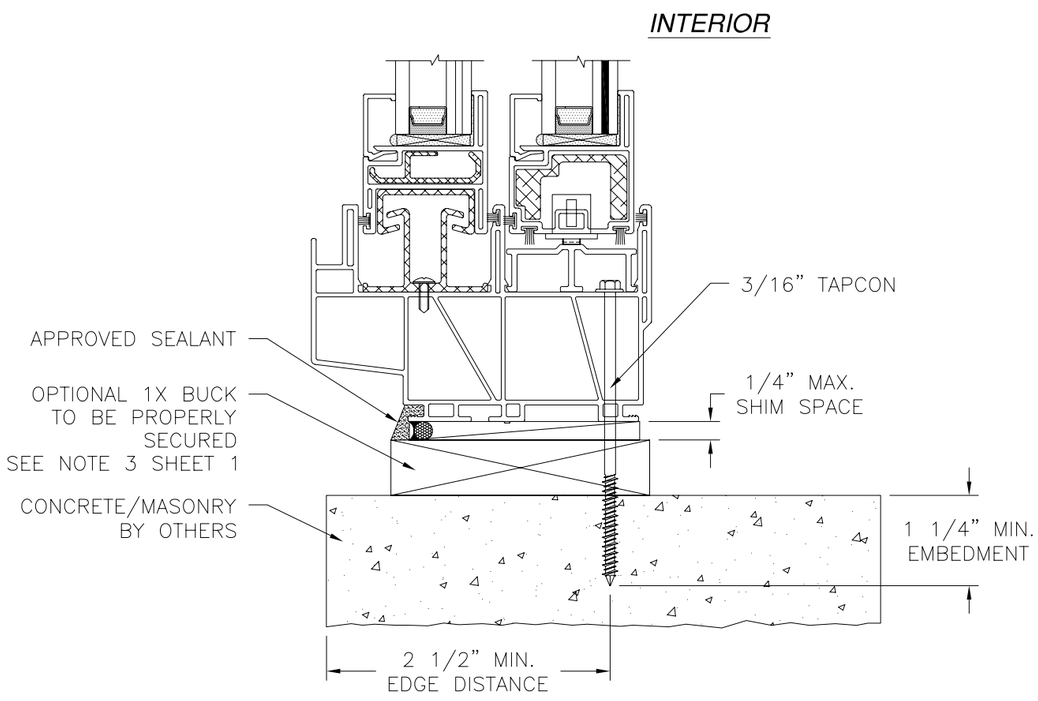

VERTICAL CROSS SECTION

CONCRETE/MASONRY INSTALLATION

NOTE:
1. INTERIOR AND EXTERIOR FINISHES, BY OTHERS, NOT SHOWN FOR CLARITY.
2. PERIMETER AND JOINT SEALANT BY OTHERS TO BE DESIGNED IN ACCORDANCE WITH ASTM E2112

SIGNED: 06/18/2013

WinDoor INCORPORATED
7500 AMSTERDAM DRIVE
ORLANDO, FL 32832
Phone: 407.481.8400
Fax: 407.481.0505
www.windoorinc.com

V-470 PVC HORIZONTAL ROLLING WINDOW XOX
136" x 24" REINFORCED IMPACT
INSTALLATION DETAILS

DRAWN:	DWG NO.	REV
V.L.	08-01961	A
SCALE NTS	DATE 04/22/13	SHEET 5 OF 6

STATE OF TEXAS
LUIS R. LOMAS
101889
LICENSED
PROFESSIONAL ENGINEER

Luis R. Lomas P.E.
TX No.: 101889

REVISIONS			
REV	DESCRIPTION	DATE	APPROVED
A	UPDATED FOR SUBMITTAL	06/13/13	R.L.

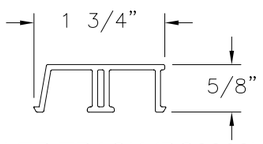

ROLLER TRACK (DS9308)
VINYL PVC .070" THICK

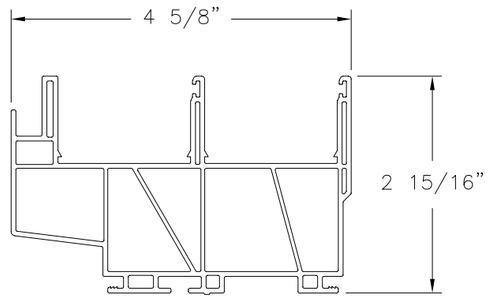

FRAME (DS9301)
VINYL PVC .065" THICK

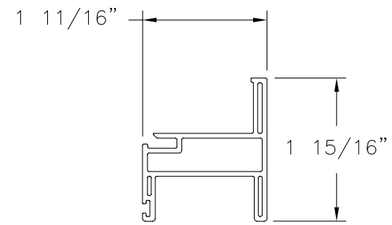

SASH TOP (SE9341)
VINYL PVC .065" THICK

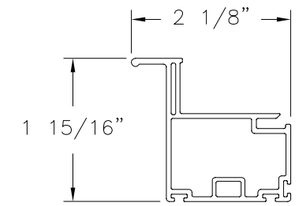

RAIL (SE9345)
VINYL PVC .065" THICK

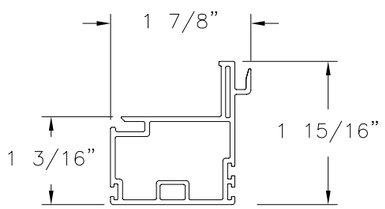

MEETING RAIL (SE9344)
VINYL PVC .065" THICK

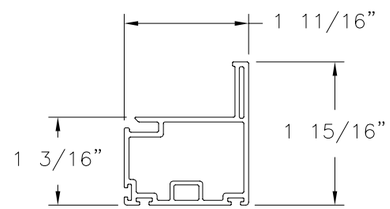

BOTTOM RAIL, JAMB AND STILES (SE9345)
VINYL PVC .065" THICK

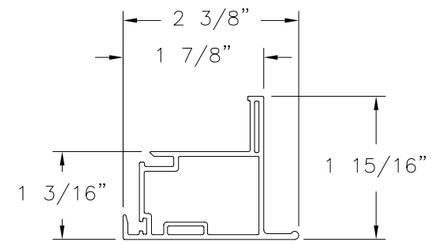

LIFT RAIL (SE9346)
VINYL PVC .065" THICK

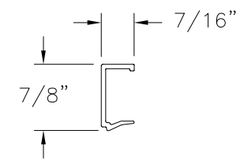

3/4" GLAZING BEAD (BV137)
VINYL PVC .059" THICK

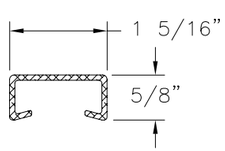

REINFORCEMENT (ACASE9341)
ALUMINUM 6063-T6 .07" THICK

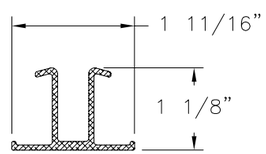

REINFORCEMENT (ACADS9301)
ALUMINUM 6063-T6 .07" THICK

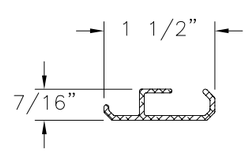

REINFORCEMENT (SE9341)
ALUMINUM 6063-T6 .065" THICK

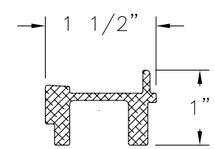

REINFORCEMENT (SE9344)
ALUMINUM 6063-T6 .09" THICK

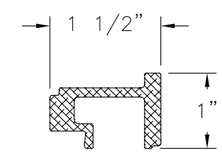

REINFORCEMENT (SE9346B)
ALUMINUM 6063-T6 .09" THICK

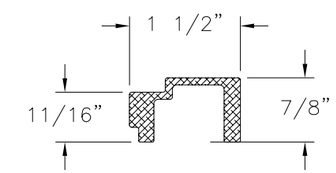

REINFORCEMENT (SE9345)
ALUMINUM 6063-T5 .095" THICK

SIGNED: 06/18/2013

WinDoor INCORPORATED
7500 AMSTERDAM DRIVE
ORLANDO, FL 32832
Phone: 407.481.8400
Fax: 407.481.0505
www.windoorinc.com

V-470 PVC HORIZONTAL ROLLING WINDOW XOX
136" x 24" REINFORCED IMPACT
COMPONENTS

DRAWN:	DWG NO.	REV
V.L.	08-01961	A
SCALE NTS	DATE 04/22/13	SHEET 6 OF 6

STATE OF TEXAS
LUIS R. LOMAS
101889
LICENSED
PROFESSIONAL ENGINEER

Luis R. Lomas P.E.
TX No.: 101889