FORCE 12

FLEXIBLE WIND ABATEMENT SCREEN SYSTEM

GENERAL NOTES

1. THIS PRODUCT IS DESIGNED IN ACCORDANCE WITH THE 2009 INTERNATIONAL BUILDING CODE (IBC) AND THE 2009 INTERNATIONAL RESIDENTIAL CODE (IRC).
2. PRODUCT MEETS ASCE 7-10 REQUIREMENTS.
3. GLASS SEPARATION WILL BE REQUIRED (SEE TABLE 3 SHEET 15).
4. WOOD FRAMING MEMBERS BY OTHERS, MUST BE ANCHORED PROPERLY TO TRANSFER LOADS TO THE STRUCTURE. WOOD FRAMING MEMBERS SHALL BE "SOUTHERN PINE" WITH G=0.55 OR GREATER DENSITY.
5. PRODUCT ANCHORS SHALL BE AS LISTED AND SPACED AS SHOWN ON DETAILS. ANCHOR EMBEDMENT TO BASE MATERIAL SHALL BE BEYOND WALL DRESSING OR STUCCO.
6. DESIGN PRESSURE RATING: SEE CHART BELOW.
7. PANELS SHOULD BE PERMANENTLY LABLED WITH A MINIMUM OF ONE LABEL PER PANEL AS FOLLOWS:

FORCE 12 – SERIES 500 – STRAP & BUCKLE
HENDEE ENTERPRISES INC.
DESIGN PRESSURE RATING: _____
THIS PRODUCT IS DESIGNED IN COMPLIANCE WITH:
ASTM E 1886-05 (LARGE MISSLE/CYCLIC LOAD)
ASTM E 1996-09 (LARGE MISSLE/CYCLIC LOAD)
ASTM E 330-02 (UNIFORM STATIC LOAD PRESSURE)
IMPACT RESISTANT: LARGE AND SMALL MISSILE IMPACT

HURRICANE SCREEN CONSTRUCTION
(COMMON TO ALL CONDITIONS)

SCREEN & SCREEN TRACK CONSTRUCTION:

SCREEN:

THE SCREEN IS MANUFACTURED FROM A WOVEN POLYPROPYLENE MONOFILAMENT GEOTEXTILE FABRIC

SCREEN CONFIGURATION:

THE SCREEN IS MANUFACTURED IN (3) STYLES, VERTICAL SEAM, HORIZONTAL SEAM & NON-SEAMED OVERLAPPED FABRIC PANELS. THE MAXIMUM PANEL HEIGHT IS 12'-0".

THE SCREEN IS MANUFACTURED FROM A WOVEN POLYPROPYLENE MONOFILAMENT GEOTEXTILE FABRIC WITH INDIVIDUAL FILAMENTS WOVEN INTO A BASKET WEAVE NETWORK AND CALENDERED SUCH THAT THE FILAMENTS RETAIN DIMENSIONAL STABILITY RELATIVE TO EACH OTHER.

SCREEN TRACK:

THE SCREEN TRACK IS EXTRUDED FROM 6063-T6 ALUMINUM.

DESIGN PRESSURE RATING	
POSITIVE	+ 60.0 psf
NEGATIVE	– 60.0 psf

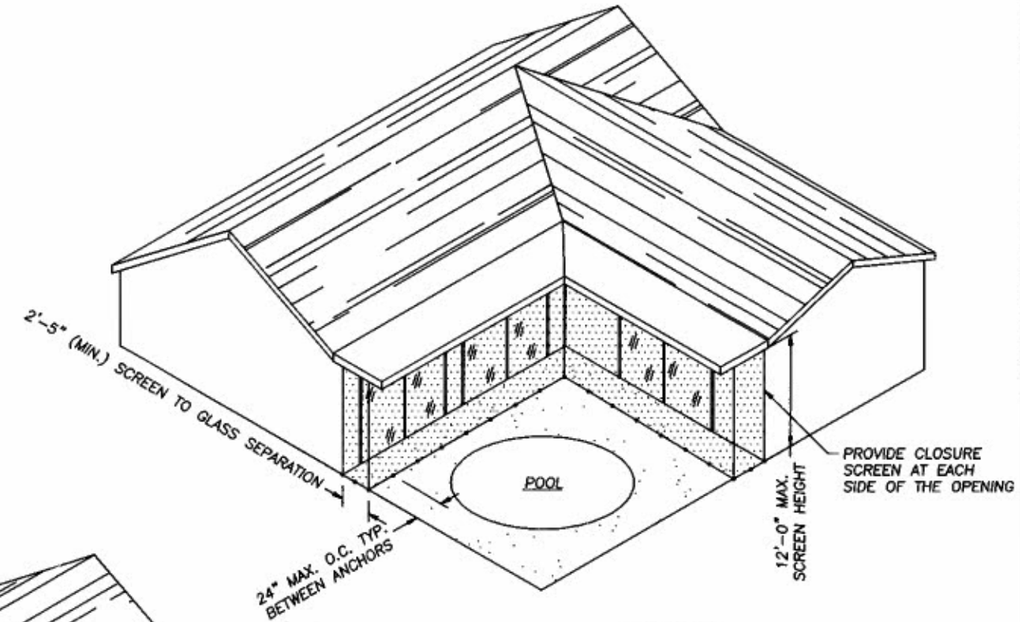

ELEVATION #2
STRAIGHT DROP SCREEN MOUNT
SEE SHT. 4

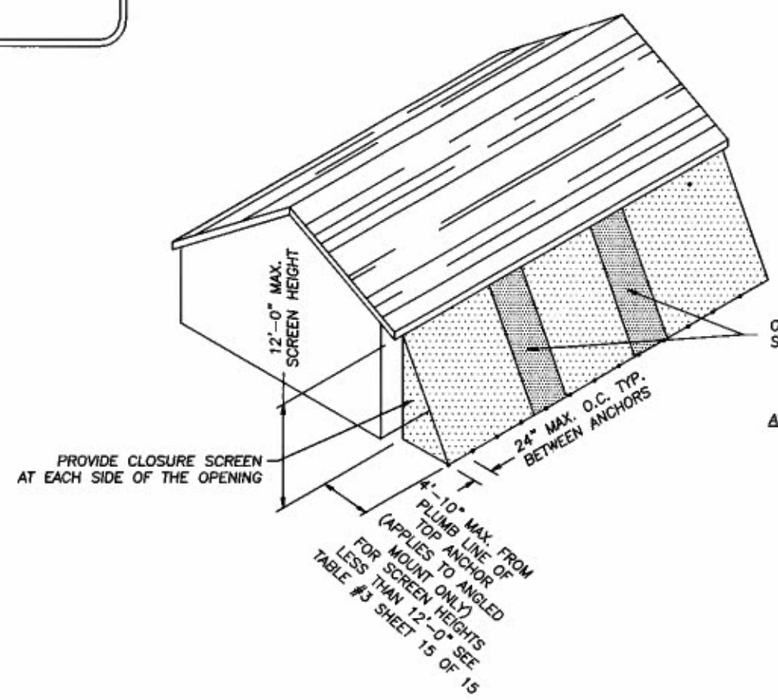

ELEVATION #1
ANGLED SCREEN MOUNT
SEE SHT. 2

James R. Bailey
6/8/13

STATE OF TEXAS
JAMES R. BAILEY
74911
LICENSED
PROFESSIONAL ENGINEER

Hendee Enterprises, Inc.
The Innovative Solutions Company
P.O. Box 4389, Houston, TX 77210-4389 5350 South Point Dr., Houston, TX 77084
(713) 796-2322, Fax (713) 796-0444, (800) 231-7279 (Nat'l), (800) 323-3441 (Texas)

COPYRIGHT
COPYRIGHT © 2002
HENDEE ENTERPRISES INC.
ALL RIGHTS RESERVED

EXPORT WARNING
EXPORT OF THIS DOCUMENT TO COUNTRIES OUTSIDE OF THE U.S. IS SUBJECT TO U.S. EXPORT ADMINISTRATION REGULATIONS.

CONSULTANTS:
James R. Bailey, P.E.
Texas P.E. # 74911
Professional Risk Consulting LLC
4001 Chapel Hill Dr.
Missouri City, Texas 77459
281-403-3055
Texas Firm # 13044

CLIENT: HENDEE ENTERPRISES
LOCATION: HOUSTON, TX
TITLE: FORCE 12 – SERIES 500 – STRAP & BUCKLE
DATE: 10/31/12
REVISION: 0

SHT. REV.	DATE	DESCRIPTION
SHT. 0	10/31/12	TEXAS DEPARTMENT OF INSURANCE SUBMITTAL

THE DOCUMENTS, DRAWINGS AND SPECIFICATIONS, AND THE INFORMATION CONTAINED THEREIN, AS INSTRUMENTS OF SERVICE, ARE AND SHALL REMAIN THE PROPERTY OF HENDEE ENTERPRISES INC. WHEN THEY HAVE BEEN PREPARED FOR USE IN CONNECTION WITH THE HENDEE ENTERPRISES INC. PROJECT. THEY ARE NOT TO BE USED BY ANY PERSON OR ENTITY FOR ANY OTHER PROJECT, EXCEPT BY AGREEMENT IN WRITING AND WITH APPROPRIATE COMPENSATION TO HENDEE ENTERPRISES INC. THE SUBMISSION OF THE DOCUMENTS TO OTHERS IN THE PURSUANCE OF THE PROJECT IS NOT TO BE CONSTRUED AS PUBLICATION IN VIOLATION OF THE RIGHTS OF THE OWNER OF THE DOCUMENTS, WHICH INCLUDES THE OWNERSHIP OF THE COMMON LAW, STATUTORY AND OTHER RESERVED RIGHTS IN THE DOCUMENTS.

CHECKED BY:	
DRAWN BY:	AD
FILE NAME:	FORCE 12
JOB NUMBER:	N/A
DOCUMENT DATE:	03/16/09

SHEET: D1

J:\FORCE 12\2013 TEXAS DEPARTMENT OF INSURANCE\F12-SERIES-500-STRAP_AND_BUCKLE_SCREEN\F12-SERIES 500-STRAP & BUCKLE.dwg, 5/28/2013 8:40:20 AM, DWG To PDF.pc3

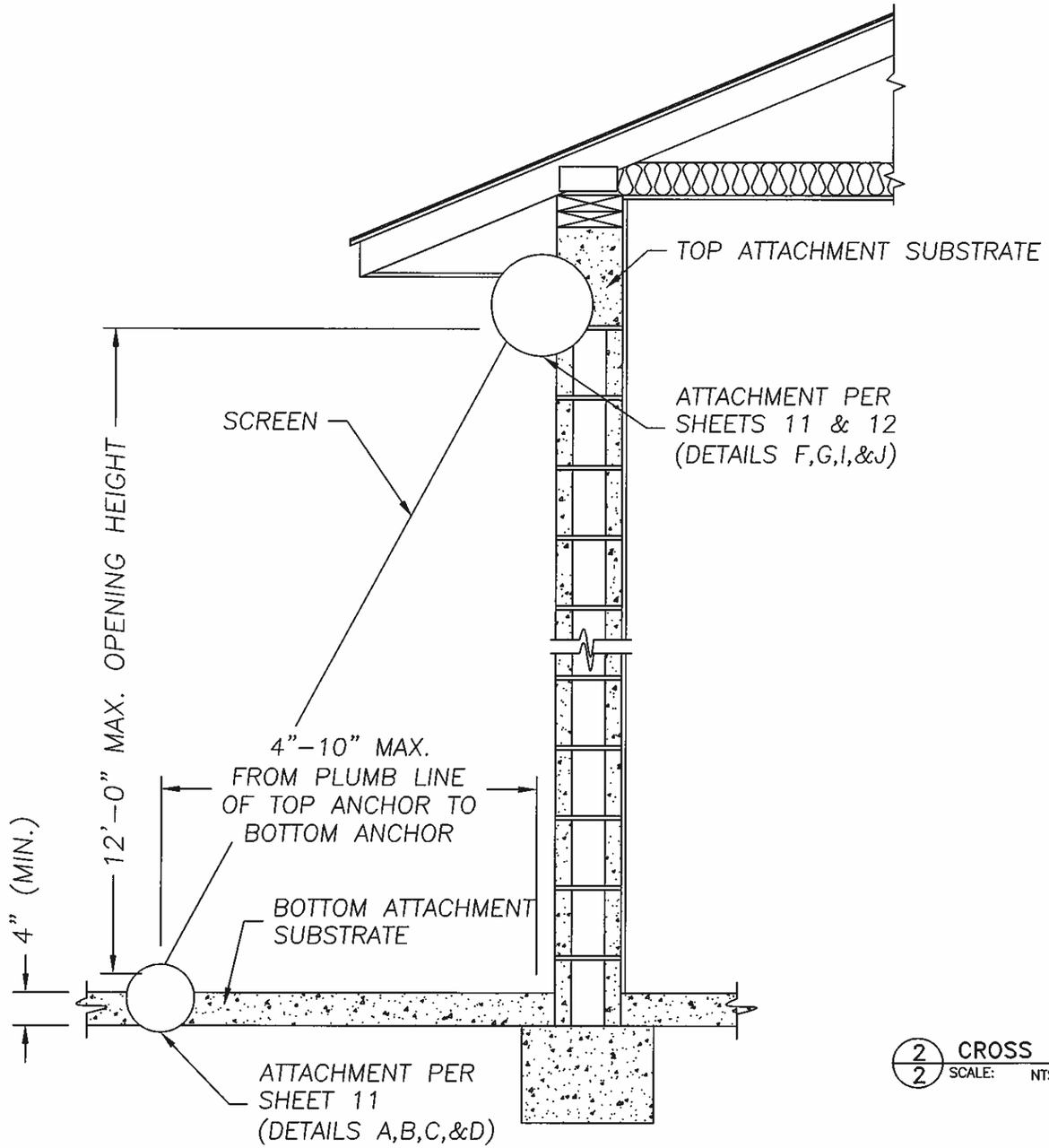

1/2 SECTION VIEW OF ANGLE MOUNTED SCREEN
SCALE: NTS = 1'-0"

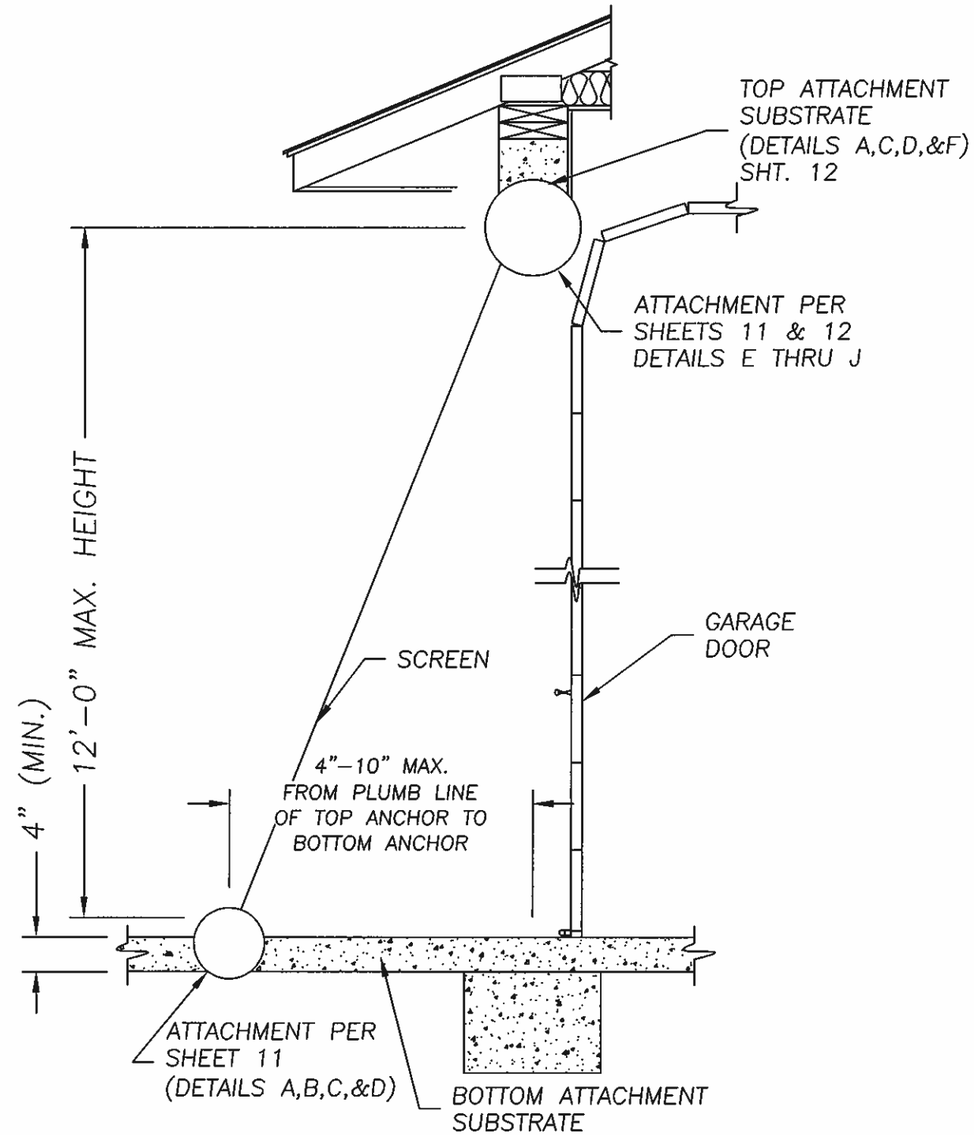

2/2 CROSS SECTION OF ANG. MOUNTED SCREEN (SIDE VIEW/GARAGE DOOR)
SCALE: NTS = 1'-0"

James R. Bailey 6/8/13

STATE OF TEXAS
JAMES R. BAILEY
74911
LICENSED
PROFESSIONAL ENGINEER

Hendee Enterprises, Inc.
The Innovative Solutions Company
P.O. Box 4289, Houston, TX 77210-4289 8350 South Point Dr., Houston, TX 77054
(713) 796-2322, Fax (713) 796-0484, (800) 231-7275 (Nat'l), (800) 323-3441 (Texas)

EXPORT WARNING
THIS DOCUMENT MAY BE SUBJECT TO COUNTRIES OUTSIDE OF THE U.S. IS SUBJECT TO U.S. EXPORT ADMINISTRATION REGULATIONS.

COPYRIGHT
COPYRIGHT © 2002
HENDEE ENTERPRISES INC.
ALL RIGHTS RESERVED

CONSULTANTS:
James R. Bailey, P.E.
Texas PE # 74911
Platinum Risk Consulting LLC
4931 Chappel Hill Dr.
Missouri City, Texas 77459
281-403-2835
Texas Firm # 11044

CLIENT: HENDEE ENTERPRISES
LOCATION: HOUSTON, TX
TITLE: FORCE 12 - SERIES 500 - STRAP & BUCKLE
DATE: 10/31/12
REVISION: 0

BY:	REV:	DATE	DESCRIPTION
KAL	0	10/31/12	TEXAS DEPARTMENT OF INSURANCE SUBMITTAL

THIS DOCUMENT, CONTAINING CONFIDENTIAL AND TRADE SECRET INFORMATION, IS THE PROPERTY OF HENDEE ENTERPRISES, INC. AND IS LENT TO THE RECIPIENT IN CONFIDENCE. THE RECEIPT OF RECEIPTOR AND ACCEPTOR THEREOF, BY ACCEPTANCE OF THIS DOCUMENT, AGREES (1) NOT TO REPRODUCE IN WHOLE OR IN PART IN ANY FORM OR MEDIUM WITHOUT EXPRESS WRITTEN PERMISSION OF HENDEE ENTERPRISES, INC., (2) NOT TO USE THE DOCUMENT OR ANY PART THEREOF FOR ANY PURPOSE EXCEPT THE PURPOSE FOR WHICH IT IS LOANED, (3) NOT TO DISCLOSE TO OTHERS THE DOCUMENT OR THE CONTENTS OF THE SIGNED DOCUMENT OR ANY DISCLOSURE TO OTHERS BEING THE DOCUMENT OR THE CONTENTS OF THE SIGNED DOCUMENT, (4) TO RETURN THE DOCUMENT TO HENDEE ENTERPRISES, INC. UPON REQUEST, AND (5) TO COPIES THEREOF, AND ALL WORKS CREATED THEREFROM TO HENDEE ENTERPRISES, INC.

CHECKED BY:	
DRAWN BY:	AD
FILE NAME:	FORCE 12
JOB NUMBER:	N/A
DOCUMENT DATE:	03/16/09

SHEET: D2

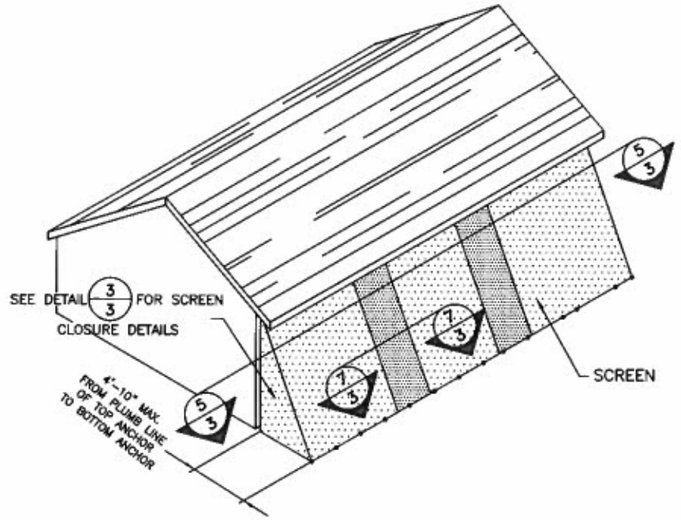

1/3 SCREEN WITH SIDE CLOSURE SCREEN
SCALE: NTS = 1'-0"

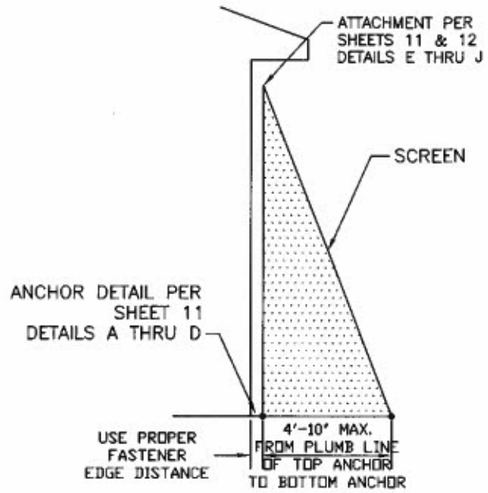

3/3 SIDE CLOSURE SCREEN
SCALE: NTS = 1'-0"

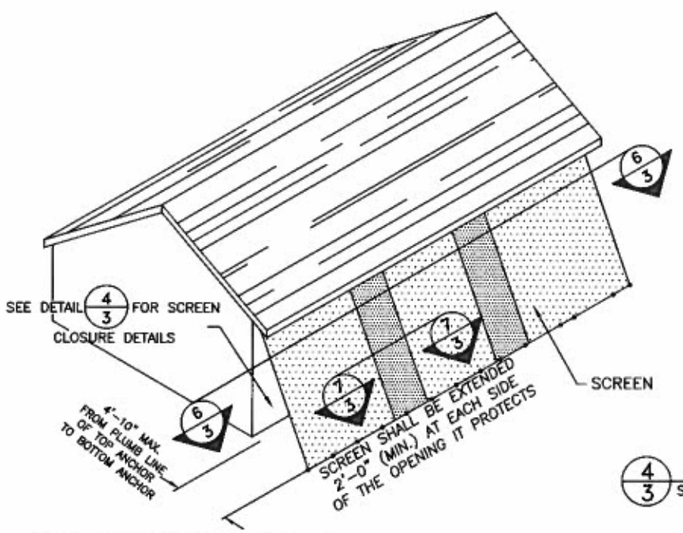

2/3 SCREEN WITHOUT SIDE CLOSURE SCREEN
SCALE: NTS = 1'-0"

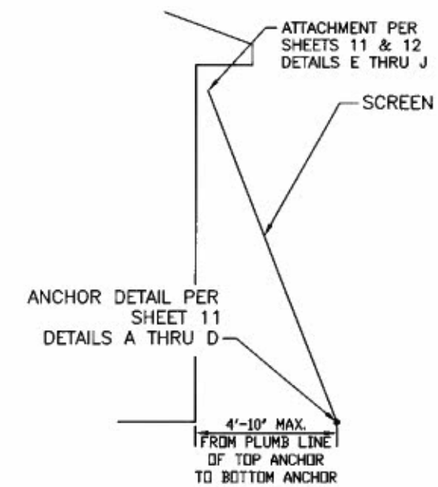

4/3 SIDE CLOSURE SCREEN – NO RETURN
SCALE: NTS = 1'-0"

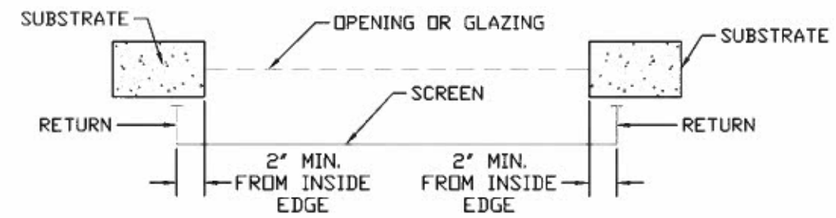

5/3 ANGLED SCREEN CLOSURE WITH RETURN (PLAN VIEW)
SCALE: NTS = 1'-0"

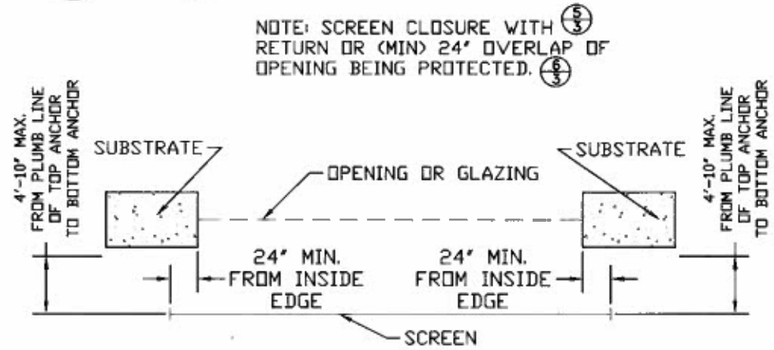

6/3 ANGLED SCREEN CLOSURE – NO RETURN (PLAN VIEW)
SCALE: NTS = 1'-0"

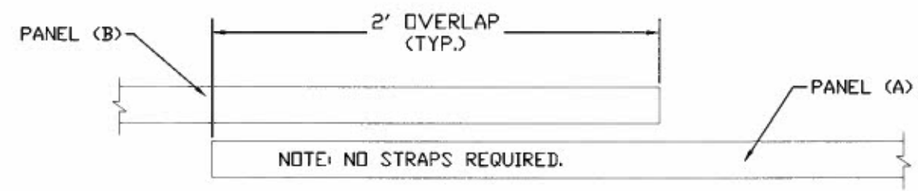

7/3 PANEL OVERLAP – SECTION
SCALE: NTS = 1'-0"

James R. Bailey 6/8/13

STATE OF TEXAS
JAMES R. BAILEY
74911
LICENSED
PROFESSIONAL ENGINEER

Hendee Enterprises, Inc.
The Innovative Solutions Company
P.O. Box 4308, Houston, TX 77210-4308, 8000 South Peral Drive, Houston, TX 77054
(713) 796-2322, Fax (713) 796-0444, (800) 231-7275 (NATL), (800) 333-3041 (Texas)

EXPORT WARNING
EXPORT OF THIS DOCUMENT TO COUNTRIES OTHER THAN U.S. IS SUBJECT TO U.S. EXPORT ADMINISTRATION REGULATIONS.

COPYRIGHT
COPYRIGHT © 2002
HENDEE ENTERPRISES INC.
ALL RIGHTS RESERVED

CONSULTANTS:
James R. Bailey, P.E.
Texas PE # 74911
Platinum Risk Consulting LLC
4931 Chappel Hill Dr.
Missouri City, Texas 77459
281-403-2925
Texas Firm # 11044

CLIENT: HENDEE ENTERPRISES
LOCATION: HOUSTON, TX
TITLE: FORCE 12 – SERIES 500 – STRAP & BUCKLE
DATE: 10/31/12
REVISION: 0

BY:	REV:	DATE	DESCRIPTION
MJL	0	10/31/12	TEXAS DEPARTMENT OF INSURANCE SUBMITTAL

THIS DRAWING, ALL WRITTEN MATERIAL AND DATA IS PROPRIETARY TO HENDEE ENTERPRISES, INC. AND IS SUBMITTED IN CONFIDENCE. THE INFORMATION CONTAINED HEREIN IS NOT TO BE DISCLOSED TO OTHERS, REPRODUCED, OR USED FOR ANY PURPOSE OTHER THAN THE PROJECT FOR WHICH IT WAS SUBMITTED WITHOUT THE WRITTEN CONSENT OF HENDEE ENTERPRISES, INC. IF THIS DOCUMENT IS LOANED, THE FOLLOWING APPLIES: (1) IT IS THE PROPERTY OF HENDEE ENTERPRISES, INC. AND IS TO BE RETURNED UPON REQUEST; (2) IT SHALL NOT BE REPRODUCED, COPIED OR LENT TO OTHERS WITHOUT THE WRITTEN CONSENT OF HENDEE ENTERPRISES, INC.; (3) IT SHALL NOT BE USED FOR ANY PURPOSE OTHER THAN THE PROJECT FOR WHICH IT WAS SUBMITTED; AND (4) THE CONDITIONS OF THIS NOTICE SHALL BE BINDING UPON THE RECEIVER, HIS EMPLOYEES, AGENTS, REPRESENTATIVES, SUCCESSORS AND ASSIGNS.

CHECKED BY:	
DRAWN BY:	AD
FILE NAME:	FORCE 12
JOB NUMBER:	N/A
DOCUMENT DATE:	03/16/09

SHEET: D3

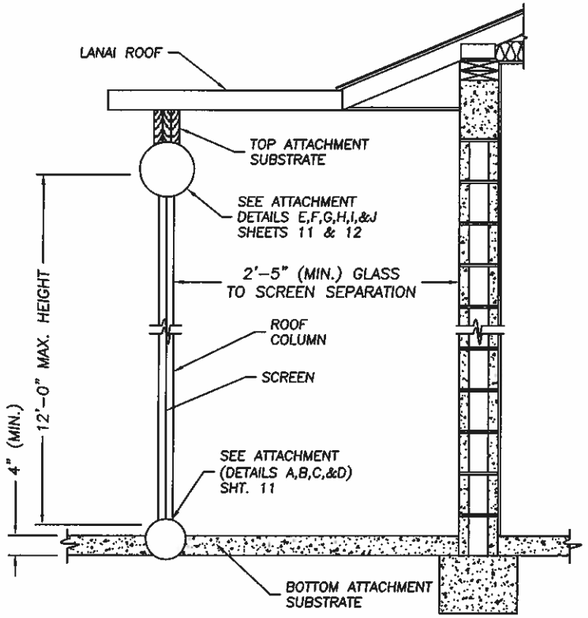

1/4 CROSS SECTION OF VERT. MOUNTED STRAIGHT DROP SCREEN (SIDE VIEW)/LANAI
SCALE: NTS=1'-0"

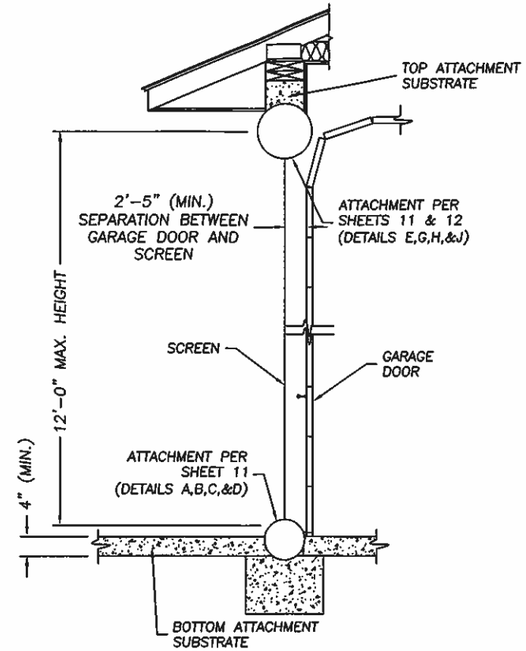

2/4 CROSS SECTION OF VERT. MOUNTED STRAIGHT DROP SCREEN (SIDE VIEW/GARAGE DOOR)
SCALE: NTS=1'-0"

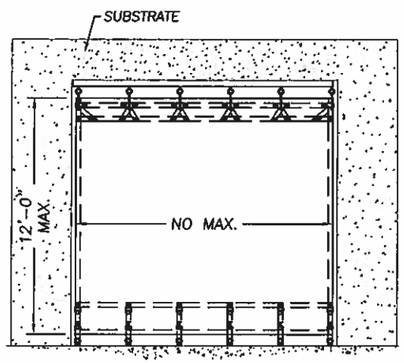

3/4 VERT. MOUNTED STRAIGHT DROP SCREEN (ELEMENTION)
SCALE: NTS=1'-0"

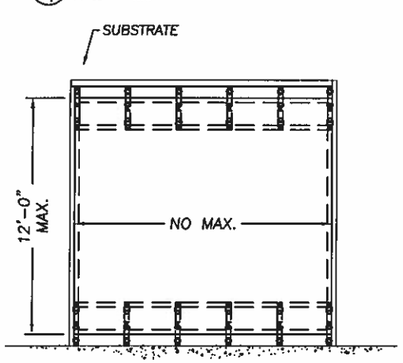

3.1/4 VERT. MOUNTED STRAP AND BUCKLE (ELEVATION) OPTION 2
SCALE: NTS=1'-0"

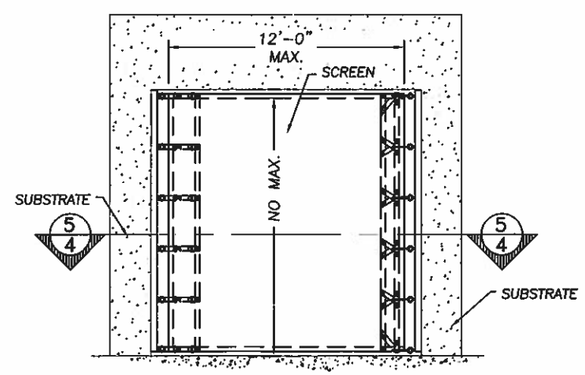

4/4 HOR. MOUNTED STRAIGHT DROP SCREEN (ELEVATION)
SCALE: NTS=1'-0"

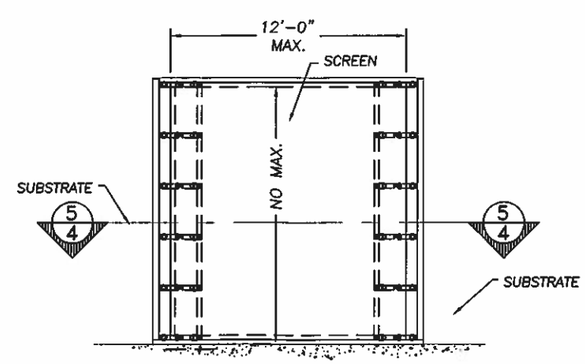

4.1/4 HOR. MOUNTED STRAP AND BUCKLE (ELEVATION) OPTION 2
SCALE: NTS=1'-0"

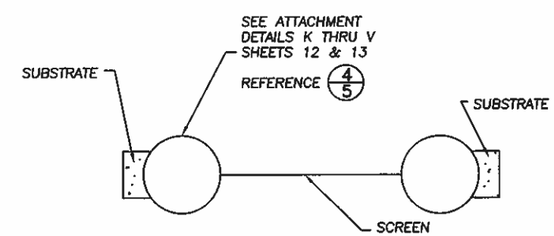

**IF THE SUBSTRATE IS NOT A CONTINOUS LATERALLY-SUPPORTED WALL MADE OF STRUCTURAL TIMBER FRAMING, RE-ENFORCED CONCRETE, OR RE-ENFORCED CONCRETE BLOCK OR THE SUBSTRATE IS A COLUMN WITHOUT INTERMEDIATE LATERAL SUPPORT, THEN A LICENSED PROFESSIONAL ENGINEER IS TO DETERMINE IF COLUMN/SUBSTRATE CAN RESIST APPLIED LOADS FROM THE SCREEN AS REQUIRED BY CODE.

5/4 SECTION OF HOR. MOUNTED STRAIGHT DROP SCREEN (PLAN VIEW)
SCALE: NTS=1'-0"

James R. Bailey
6/8/13

STATE OF TEXAS
JAMES R. BAILEY
74911
LICENSED
PROFESSIONAL ENGINEER

Hendee Enterprises, Inc.
The Innovative Solutions Company
P.O. Box 4289, Houston, TX 77210-4289 8350 South Park Dr., Houston, TX 77054
(713) 796-2322, Fax (713) 796-0494, (800) 231-7275 (Net1), (800) 323-3641 (Texas)

EXPORT WARNING
THIS DOCUMENT MAY BE SUBJECT TO COUNTRIES OUTSIDE OF THE U.S. IS SUBJECT TO U.S. EXPORT ADMINISTRATION REGULATIONS.

COPYRIGHT
COPYRIGHT © 2002
HENDEE ENTERPRISES INC.
ALL RIGHTS RESERVED

CONSULTANTS:
James R. Bailey, P.E.
Texas PE # 74911
Platinum Risk Consulting LLC
4931 Chapel Hill Dr.
Missouri City, Texas 77459
281-483-2825
Texas Firm # 11044

BY:	REV	DATE	DESCRIPTION
KLL	0	10/31/12	TEXAS DEPARTMENT OF INSURANCE SUBMITTAL

THE COLLATERAL, CONTENTS, CONDITIONS, AND TERMS, SUBJECT, APPROACHES, IS THE PROPERTY OF HENDEE ENTERPRISES, INC. AND IS SUBJECT TO THE EXCLUSIVE, NON-EXCLUSIVE, OR RESTRICTED USE AGREEMENT BETWEEN HENDEE ENTERPRISES, INC. AND THE RECIPIENT. THE RECIPIENT ACCEPTS THE WORKS OF HENDEE ENTERPRISES, INC. IN WHOLE (1) WILL NOT USE THE COLLATERAL OR ANY COPY OR COPIES OF THE COLLATERAL FOR ANY PURPOSE OTHER THAN THE PURPOSE AGREED TO BY HENDEE ENTERPRISES, INC. (2) WILL NOT DISCLOSE THE COLLATERAL OR ANY COPY OR COPIES OF THE COLLATERAL TO ANY PERSON OR ENTITY NOT ORGANIZATIONALLY RELATED TO THE RECIPIENT, UNLESS THE DISCLOSURE IS REQUIRED BY LAW OR PURSUANT TO A VALID AGREEMENT BETWEEN THE RECIPIENT AND HENDEE ENTERPRISES, INC. (3) WILL COMPLY WITH ALL OTHER RESTRICTIONS AND/OR REQUIREMENTS IMPOSED BY THE ABOVE (1) AND (2) ON THE RECIPIENT'S USE OF THE COLLATERAL. THE RECIPIENT'S FAILURE TO COMPLY WITH ANY OF THE ABOVE (1), (2) OR (3) WILL CONSTITUTE AN INFRINGEMENT OF HENDEE ENTERPRISES, INC. COPYRIGHT.

CLIENT: HENDEE ENTERPRISES
LOCATION: HOUSTON, TX
TITLE: FORCE 12 - SERIES 500 - STRAP & BUCKLE
DATE: 10/31/12
REVISION: 0

CHECKED BY:	
DRAWN BY:	AD
FILE NAME:	FORCE 12
JOB NUMBER:	N/A
DOCUMENT DATE:	03/16/09

SHEET: D4

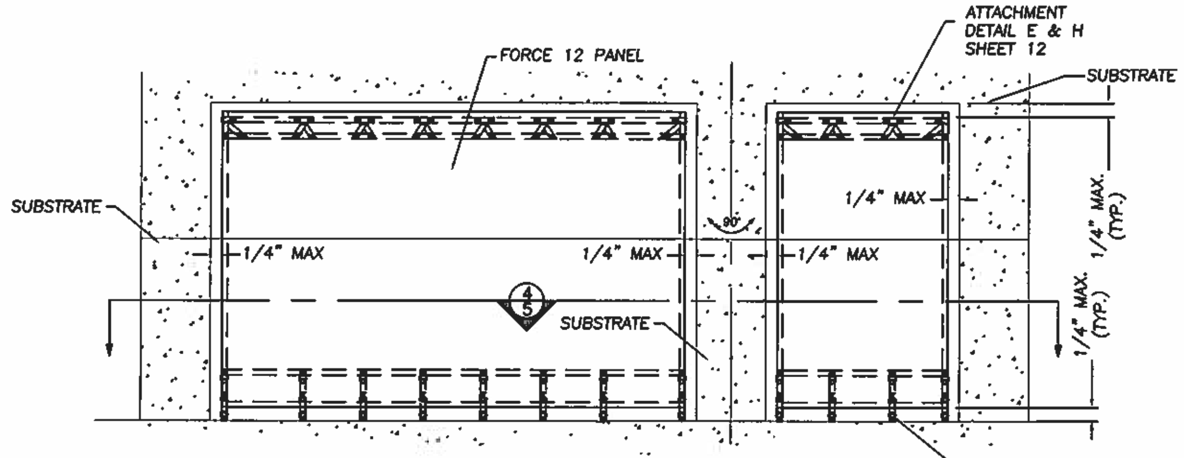

1/5 STRAIGHT DROP FORCE 12 PANEL (VERT. MOUNT, FRONT/SIDE ELEVATION)
SCALE: NTS=1'-0"

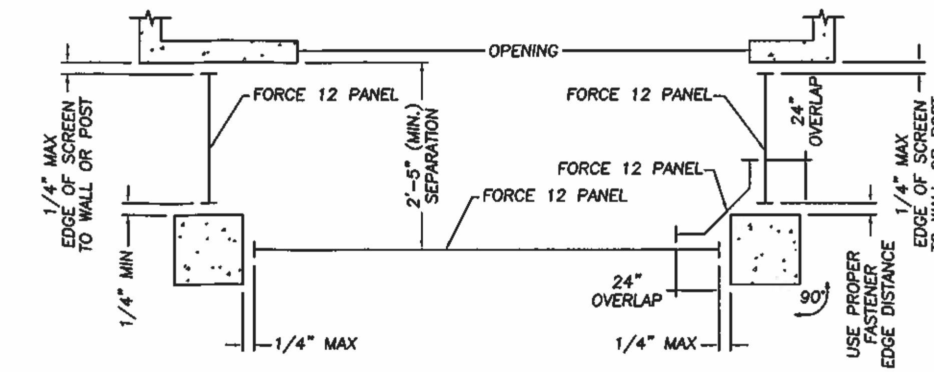

4/5 STRAIGHT DROP FORCE 12 PANEL INSIDE OF WALLS/POST (PLAN)
SCALE: NTS=1'-0"

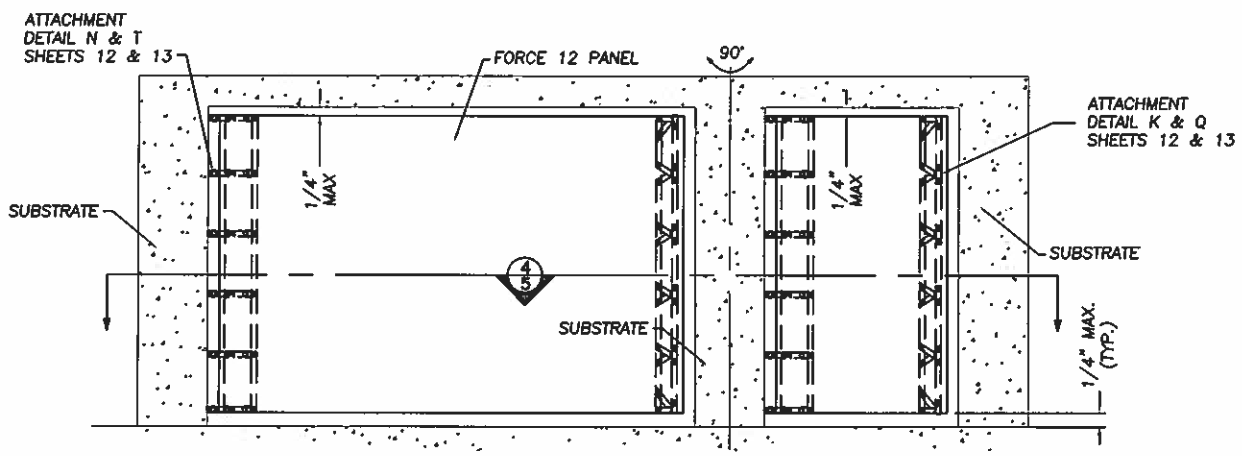

2/5 STRAIGHT DROP FORCE 12 PANEL (HOR. MOUNT, FRONT/SIDE ELEVATION)
SCALE: NTS=1'-0"

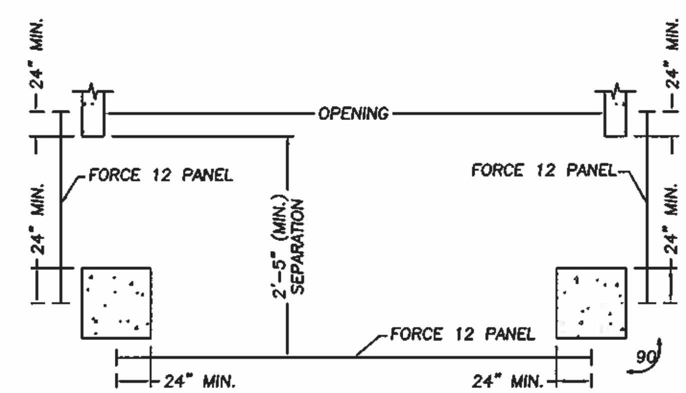

5/5 STRAIGHT DROP FORCE 12 PANEL PASSING WALL (PLAN)
SCALE: NTS=1'-0"

NOTE: SCREEN CLOSURE WITH 5/3 RETURN OR (MIN) 24" OVERLAP OF OPENING BEING PROTECTED. 6/3

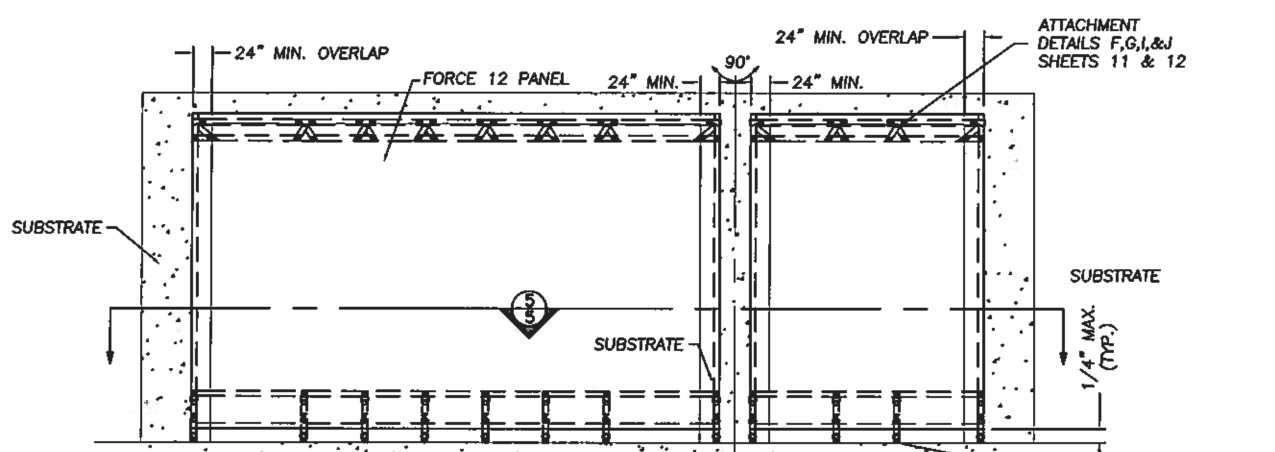

3/5 STRAIGHT DROP FORCE 12 PANEL (PAST OPENING MOUNT, VER. MOUNT, FRONT/SIDE ELEVATION)
SCALE: NTS=1'-0"

ATTACHMENT DETAILS C & D SHT. 11

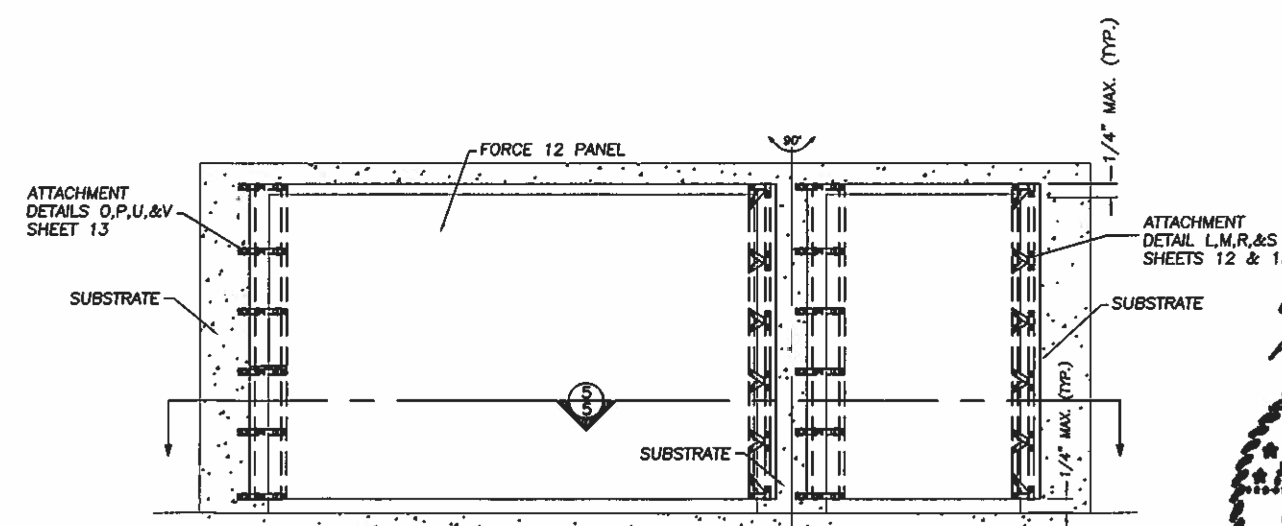

6/5 STRAIGHT DROP FORCE 12 PANEL (PAST OPENING MOUNT, HOR. MOUNT, FRONT/SIDE ELEVATION)
SCALE: NTS=1'-0"

James R. Bailey 6/8/13

STATE OF TEXAS
JAMES R. BAILEY
74911
LICENSED PROFESSIONAL ENGINEER

Hendee Enterprises, Inc.
The Innovative Solutions Company
P.O. Box 4289, Houston, TX 77210-4289 9350 South Point Dr., Houston, TX 77054
(713) 796-2322, Fax (713) 796-0494, (800) 231-7275 (Nat'l), (800) 323-3841 (Texas)

COPYRIGHT
COPYRIGHT © 2002
HENDEE ENTERPRISES INC.
ALL RIGHTS RESERVED

EXPORT WARNING:
EXPORT OF THIS DOCUMENT TO COUNTRIES OUTSIDE OF THE U.S. IS SUBJECT TO U.S. EXPORT ADMINISTRATION REGULATIONS.

CONSULTANTS:
James R. Bailey, P.E.
Texas PE # 74911
Platinum Risk Consulting LLC
4931 Chappel Hill Dr.
Missouri City, Texas 77459
281-403-2825
Texas Firm # 11044

CLIENT:	HENDEE ENTERPRISES
LOCATION:	HOUSTON, TX
TITLE:	FORCE 12 - SERIES 500 - STRAP & BUCKLE
DATE:	10/31/12
REVISION:	0

BY:	REV.	DATE	DESCRIPTION
KLL	0	10/31/12	TEXAS DEPARTMENT OF INSURANCE SUBMITTAL

CHECKED BY:	
DRAWN BY:	AD
FILE NAME:	FORCE 12
JOB NUMBER:	N/A
DOCUMENT DATE:	03/16/09

SHEET:
D5

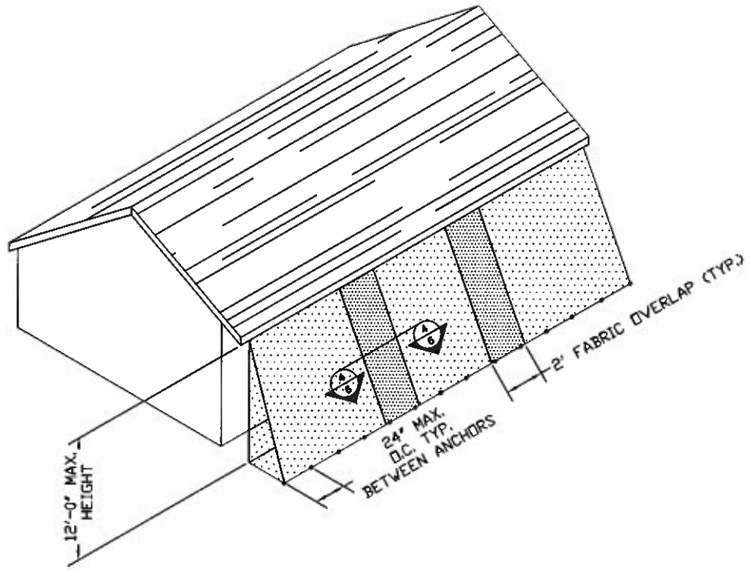

1/6 ANGLED SCREEN OVERLAP – IN APPLICATION
SCALE: NTS = 1'-0"

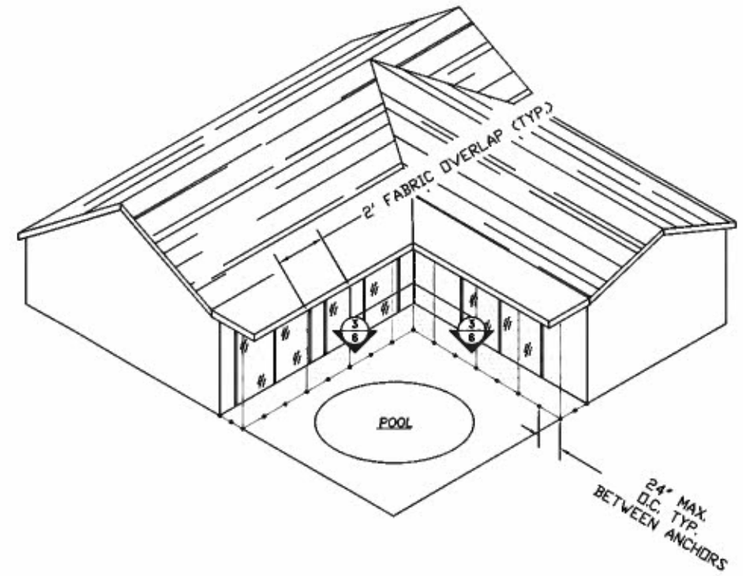

2/6 VERTICAL SCREEN CORNER OVERLAP – IN APPLICATION
SCALE: NTS = 1'-0"

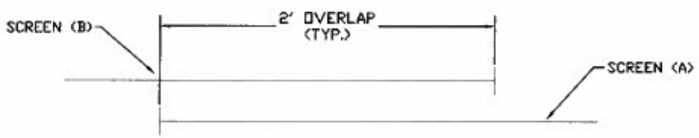

NOTE: NO STRAPS REQUIRED TO JOIN OVERLAPING SCREENS

4/6 SCREEN OVERLAP – SECTION
SCALE: NTS = 1'-0"

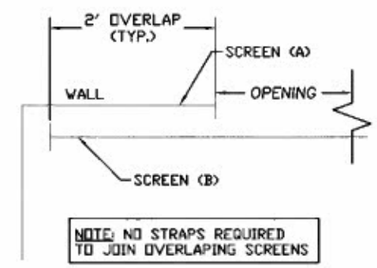

NOTE: NO STRAPS REQUIRED TO JOIN OVERLAPING SCREENS

3/6 CORNER PANEL OVERLAP (PLAN VIEW)
SCALE: NTS = 1'-0"

James R. Bailey
6/8/13

STATE OF TEXAS
JAMES R. BAILEY
74911
LICENSED
PROFESSIONAL ENGINEER

Hendee Enterprises, Inc.
The Innovative Solutions Company
P.O. Box 4289, Houston, TX 77210-4289 8350 South Point Dr., Houston, TX 77054
(713) 796-2322, Fax (713) 796-0464, (800) 231-7275 (Net1), (800) 323-3941 (Texas)

COPYRIGHT
COPYRIGHT © 2002 HENDEE ENTERPRISES INC. ALL RIGHTS RESERVED

EXPORT WARNING:
EXPORT OF THIS DOCUMENT TO COUNTRIES OUTSIDE OF THE U.S. IS SUBJECT TO U.S. EXPORT ADMINISTRATION REGULATIONS.

CONSULTANTS:
James R. Bailey, P.E.
Texas PE # 74911
Platinum Risk Consulting LLC
4931 Chappel Hill Dr.
Missouri City, Texas 77459
281-403-2825
Texas Firm # 11044

CLIENT: HENDEE ENTERPRISES
LOCATION: HOUSTON, TX
TITLE: FORCE 12 – SERIES 500 – STRAP & BUCKLE
DATE: 10/31/12
REVISION: 0

BY:	REV.	DATE	DESCRIPTION
KLL	0	10/31/12	TEXAS DEPARTMENT OF INSURANCE SUBMITTAL

CHECKED BY:	
DRAWN BY:	AD
FILE NAME:	FORCE 12
JOB NUMBER:	N/A
DOCUMENT DATE:	03/16/09

SHEET: D6

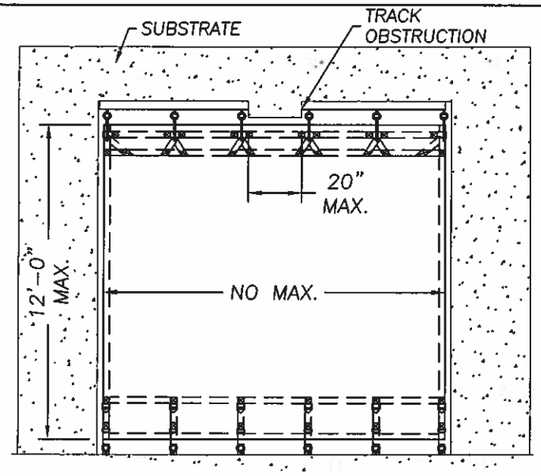

1/7 VERT. OR ANG. MOUNTED SCREEN W/ TRACK OBSTRUCTION (ELEVATION)
SCALE: NTS = 1'-0"

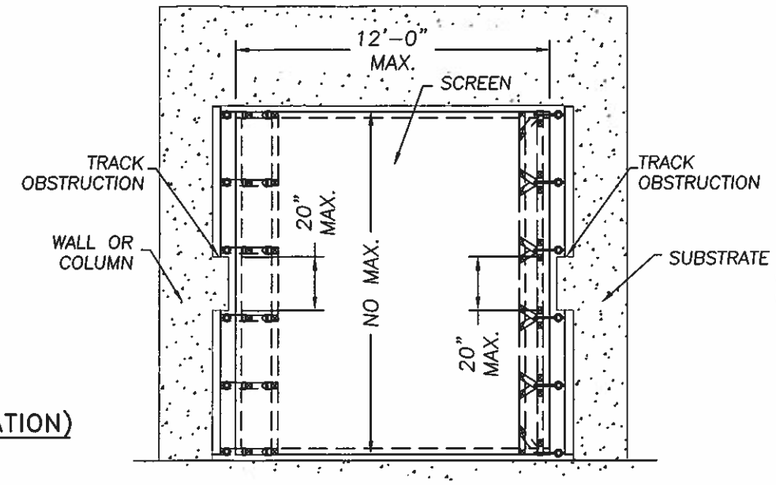

2/7 HOR. MOUNTED SCREEN W/TRACK OBSTRUCTION (ELEVATION)
SCALE: NTS = 1'-0"

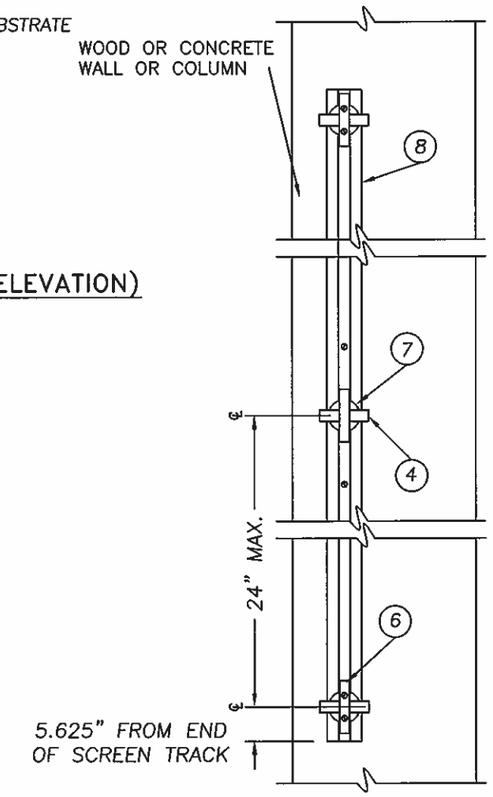

4/7 ELEVATION AT LEFT OR RIGHT SIDE MOUNTING IN WOOD OR CONCRETE
SCALE: NTS = 1'-0"

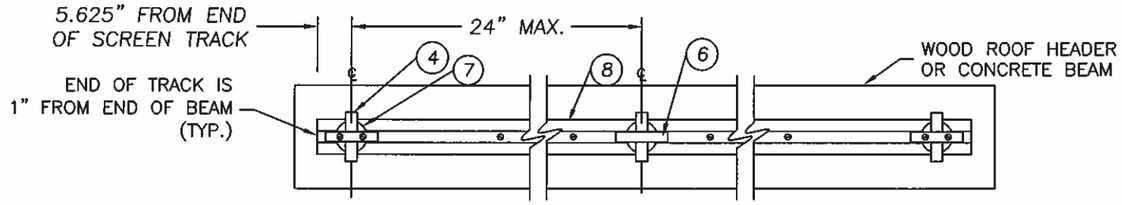

3/7 PLAN VIEW (LOOKING UP) TOP VERTICAL MOUNTING IN WOOD OR CONCRETE
SCALE: NTS = 1'-0"

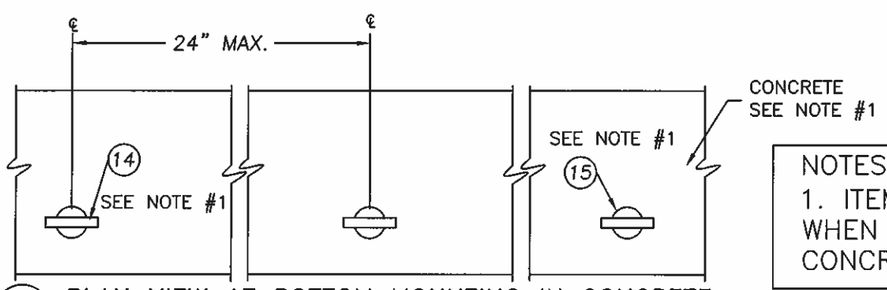

5/7 PLAN VIEW AT BOTTOM MOUNTING IN CONCRETE
SCALE: NTS = 1'-0"

NOTES:
1. ITEMS #14 & #15 ARE USED WHEN MOUNTING SCREEN BOTTOM TO CONCRETE.

James R. Bailey 6/8/13
STATE OF TEXAS
JAMES R. BAILEY
74911
LICENSED PROFESSIONAL ENGINEER

Hendee Enterprises, Inc.
The Innovative Solutions Company
P.O. Box 4288, Houston, TX 77210-4288 8350 South Point Dr., Houston, TX 77054
(713) 796-2322, Fax (713) 796-0464, (800) 231-7279 (Nat'l), (800) 323-3641 (Texas)

EXPORT WARNING
THIS DOCUMENT MAY NOT BE EXPORTED TO COUNTRIES OUTSIDE OF THE U.S. IS SUBJECT TO U.S. EXPORT ADMINISTRATION REGULATIONS.

COPYRIGHT
COPYRIGHT © 2002
HENDEE ENTERPRISES INC.
ALL RIGHTS RESERVED

CONSULTANTS:
James R. Bailey, P.E.
Texas PE # 74911
Platinum Risk Consulting LLC
4931 Chappel Hill Dr.
Missouri City, Texas 77459
281-403-2825
Texas Firm # 11044

CLIENT: HENDEE ENTERPRISES
LOCATION: HOUSTON, TX
TITLE: FORCE 12 - SERIES 500 - STRAP & BUCKLE
DATE: 10/31/12
REVISION: 0

BY:	REV	DATE	DESCRIPTION
KLL	0	10/31/12	TEXAS DEPARTMENT OF INSURANCE SUBMITTAL

THIS DRAWING, CONTAINED INFORMATION, AND THOSE ASSETS, APPURTENANCES, & IPS, PROPERTY OF HENDEE ENTERPRISES, INC., AND IS SUBJECT TO THE HENDEE IP CONTRACTS. THE RECIPIENT OF THIS DRAWING AGREES TO RETURN IT TO HENDEE ENTERPRISES, INC. UPON REQUEST. THE RECIPIENT OF THIS DRAWING ACCEPTS THE IP WITHIN IT HENDEE ENTERPRISES, INC. & WILL: (1) NOT USE THE DOCUMENT OR ANY INFORMATION CONTAINED THEREIN FOR ANY PURPOSE OTHER THAN THE ORIGINAL PURPOSE FOR WHICH IT WAS DELIVERED TO YOU BY THE COMPANY OR ANY OTHER PURPOSE AUTHORIZED IN WRITING BY THE COMPANY; (2) NOT COPY OR REPRODUCE ALL OR ANY PART OF THE DOCUMENT OR INFORMATION THEREIN; AND (3) NOT DISCLOSE ANY PART OF THE DOCUMENT OR INFORMATION THEREIN TO ANY THIRD PARTY WITHOUT THE PRIOR WRITTEN CONSENT OF HENDEE ENTERPRISES, INC.

CHECKED BY:	
DRAWN BY:	AD
FILE NAME:	FORCE 12
JOB NUMBER:	N/A
DOCUMENT DATE:	03/16/09

SHEET: D7

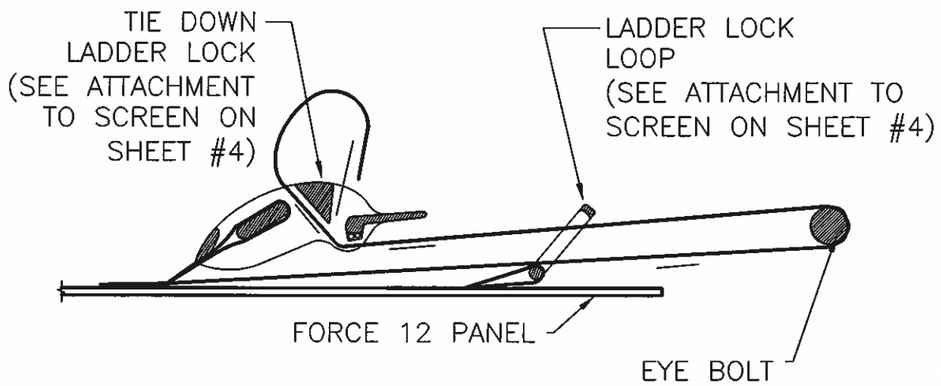

2 D1 STRAP PATH – THROUGH BUCKLE
SCALE: N.T.S. =1'–0"

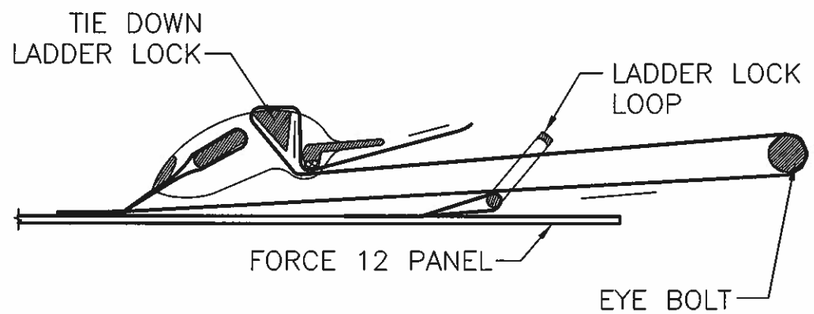

3 D1 STRAP PATH – TIGHTEN
SCALE: NTS =1'–0"

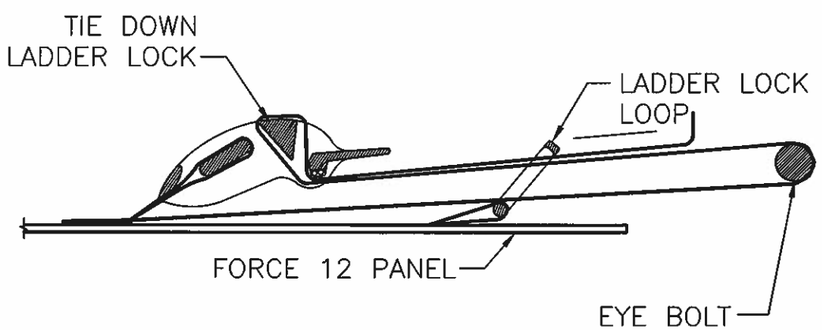

4 D1 STRAP PATH – THROUGH LOOP
SCALE: NTS =1'–0"

SCREEN ATTACHMENT STRAP DETAIL
AT THE BOTTOM OF SCREEN

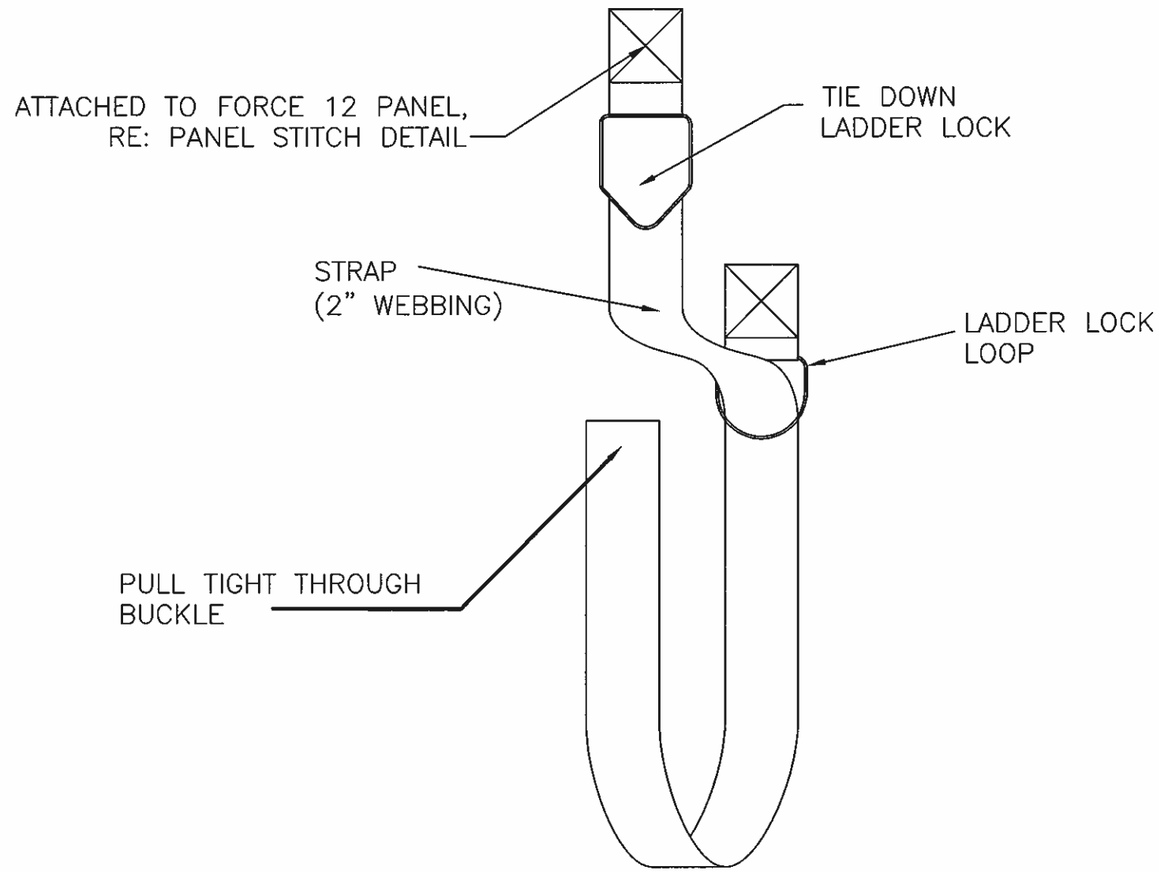

1 D1 PANEL ATTACHMENT – STRAP
SCALE: NTS =1'–0"

James R. Bailey
6/8/13

STATE OF TEXAS
JAMES R. BAILEY
74911
LICENSED
PROFESSIONAL ENGINEER

Hendee Enterprises, Inc.
The Innovative Solutions Company
P.O. Box 4288, Houston, TX 77210–4288 8350 South Point Dr., Houston, TX 77054
(713) 796–2322, Fax (713) 796–0464, (800) 231–7270 (Nat'l), (800) 323–5841 (Texas)

EXPORT WARNING
EXPORT OF THIS DOCUMENT TO COUNTRIES OUTSIDE OF THE U.S. IS SUBJECT TO U.S. EXPORT ADMINISTRATION REGULATIONS.

COPYRIGHT
COPYRIGHT © 2002
HENDEE ENTERPRISES INC.
ALL RIGHTS RESERVED

CONSULTANTS:
James R. Bailey, P.E.
Texas PE # 74911
Platinum Risk Consulting LLC
4931 Chappel Hill Dr.
Missouri City, Texas 77459
281–403–2825
Texas Firm # 11044

CLIENT: HENDEE ENTERPRISES
LOCATION: HOUSTON, TX
TITLE: FORCE 12 – SERIES 500 – STRAP & BUCKLE
DATE: 10/31/12
REVISION: 0

BY:	REV	DATE	DESCRIPTION
KLL	0	10/31/12	TEXAS DEPARTMENT OF INSURANCE SUBMITTAL

THIS DOCUMENT, DRAWINGS, SYMBOLS, AND MORE GENERALLY INFORMATION, IS THE PROPERTY OF HENDEE ENTERPRISES, INC. AND IS BASED ON THE INFORMATION PROVIDED BY THE CLIENT. THE ACCURACY OF INFORMATION PROVIDED BY OTHERS IS NOT GUARANTEED BY HENDEE ENTERPRISES, INC. IT SHALL NOT BE COPIED OR ANY COPY THEREOF MADE WITHOUT THE WRITTEN PERMISSION OF THE COPYRIGHT OWNER. THE COPYRIGHT OF THIS DOCUMENT, OR ANY COPY THEREOF, IS THE PROPERTY OF HENDEE ENTERPRISES, INC. IT SHALL NOT BE DISCLOSED TO ANY OTHER PERSON OR ENTITY WITHOUT THE WRITTEN PERMISSION OF HENDEE ENTERPRISES, INC.

CHECKED BY:
DRAWN BY: AD
FILE NAME: FORCE 12
JOB NUMBER: N/A
DOCUMENT DATE: 03/16/09

SHEET: D8

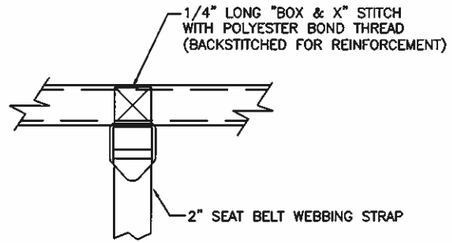

PLAN VIEW

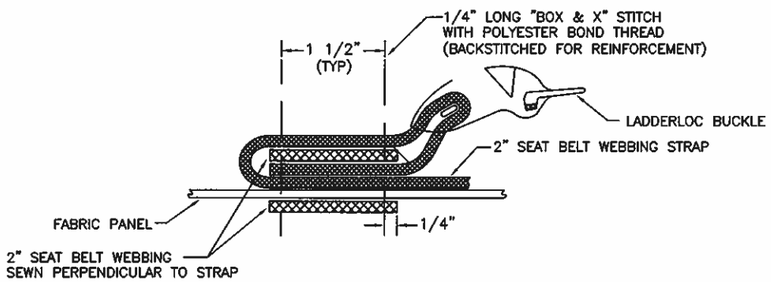

ATTACHMENT OF TIE-DOWN LADDERLOC DETAIL TO SCREEN
AT THE BOTTOM OF SCREEN

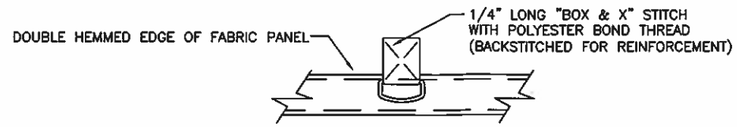

PLAN VIEW

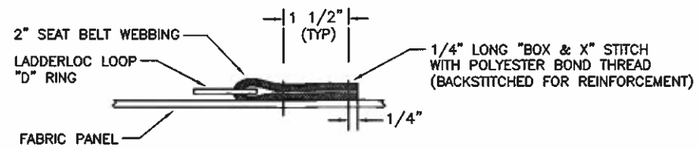

ATTACHMENT OF LADDERLOC LOOP DETAIL TO SCREEN
AT THE BOTTOM OF SCREEN

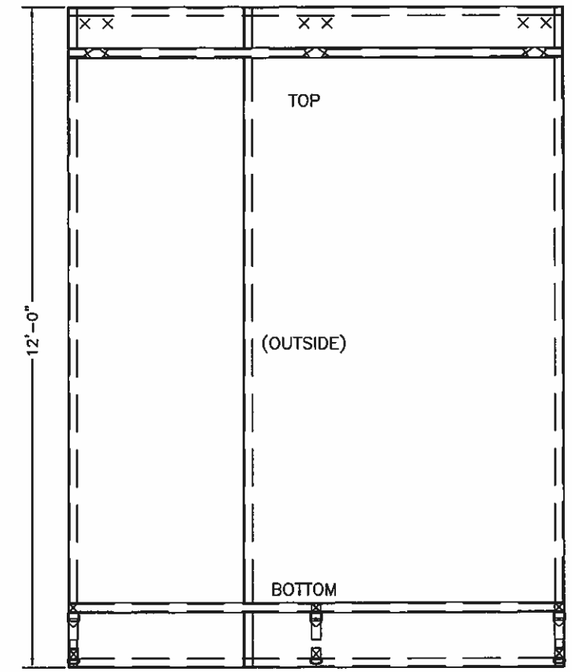

HURRICANE SCREEN ELEVATION

(OUTSIDE STITCHING DETAILS. THE SCREEN IS MANUFACTURED IN (3) STYLES; VERTICAL SEAM, HORIZONTAL SEAM, & NON-SEAMED OVERLAPPED FABRIC PANELS)

FORCE 12 - MATERIAL SPECIFICATIONS OF SCREEN	
FIBER CONTENT	100% POLYPROPYLENE
COLOR	BLACK OR ROYAL BLUE
FINISH	TENTERED & CALENDERED
CONSTRUCTION (APPROXIMATE)	WARP: 60 FILL: 50
WEAVE	3/4" BASKET WEAVE
THICKNESS	20 MILS
WEIGHT, (ASTM D-3776-85)	7.6 OZ/YD^2
ABRASION RESISTANCE (ASTM D-3884)	WARP: 190 LBS FILL: 250 LBS
TENSILE STRENGTH (ASTM D-1682, GRAB METHOD)	WARP: 445 LBS FILL: 375 LBS
TEAR STRENGTH (ASTM D-2261, TRAP METHOD)	WARP: 185 LBS FILL: 190 LBS
BURST STRENGTH (ASTM D-3786 MULLEN)	720 LBS/IN^2
PUNCTURE STRENGTH (ASTM D-3787, MODIFIED)	165 LBS
U.V. RESISTANCE (ASTM G-53, % RETAINED AT 5,000 HOURS)	90%
AIR FLOW	230 CFM

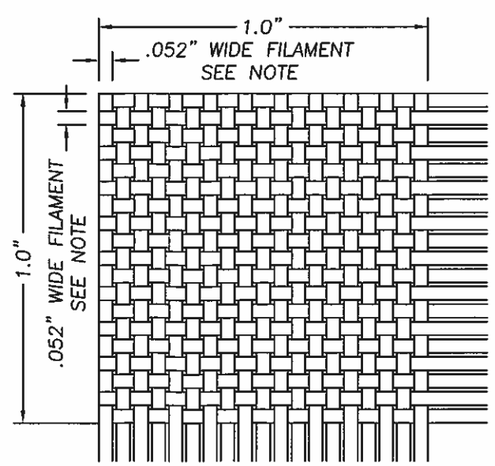

1 SQ. INCH OF SCREEN WEAVE PATTERN

NOTE:
THERE ARE (19) .052" WIDE FILAMENTS, BOTH HORIZONTALLY & VERTICALLY IN A SQUARE INCH OF FABRIC. EACH FILAMENT IS MADE UP OF (3) .013" WIDE SUB FILAMENTS.

James R. Bailey
6/8/13

STATE OF TEXAS
JAMES R. BAILEY
74911
LICENSED
PROFESSIONAL ENGINEER

Hendee Enterprises, Inc.
The Innovative Solutions Company
P.O. Box 4289, Houston, TX 77210-4289 8350 South Point Dr., Houston, TX 77054
(713) 790-2322, Fax: (713) 790-0464, (800) 231-7275 (Nat'l), (800) 323-3641 (Texas)

EXPORT WARNING
EXPORT OUTSIDE OF THE U.S. IS SUBJECT TO U.S. EXPORT ADMINISTRATION REGULATIONS.

COPYRIGHT
COPYRIGHT © 2002
HENDEE ENTERPRISES INC.
ALL RIGHTS RESERVED

CONSULTANTS:
James R. Bailey, P.E.
Texas PE # 74911
Platinum Risk Consulting LLC
4931 Chappel Hill Dr.
Missouri City, Texas 77459
281-403-2825
Texas Firm # 11044

CLIENT: HENDEE ENTERPRISES
LOCATION: HOUSTON, TX
TITLE: FORCE 12 - SERIES 500 - STRAP & BUCKLE
DATE: 10/31/12
REVISION: 0

BY:	REV	DATE	DESCRIPTION
KGL	0	10/31/12	TEXAS DEPARTMENT OF INSURANCE SUBMITTAL

THIS DOCUMENT, CONTAINING CONFIDENTIAL AND TRADE SECRET INFORMATION, IS THE PROPERTY OF HENDEE ENTERPRISES, INC. AND IS BEING TO THE RECIPIENT IN CONFIDENCE. THE RECIPIENT OF THE DOCUMENT AGREES TO (1) NOT USE THE DOCUMENT OR ANY INFORMATION CONTAINED IN THE DOCUMENT FOR ANY PURPOSE OTHER THAN THE PURPOSE ACCEPTED BY THE OWNER OF HENDEE ENTERPRISES, INC., (2) NOT USE THE DOCUMENT OR ANY INFORMATION CONTAINED IN THE DOCUMENT TO OBTAIN, DIRECTLY OR INDIRECTLY, ANY COMMERCIAL OR PRIVATE GOOD OR SERVICE, (3) NOT DISCLOSE TO OTHERS DIRECT THE DOCUMENT OR THE CONTENTS, OR PRIVATE GOODS OR SERVICES OBTAINED DIRECTLY OR INDIRECTLY FROM THE DOCUMENT, (4) NOT COPY THE DOCUMENT IN WHOLE OR IN PART, (5) RETURN THE DOCUMENT TO HENDEE ENTERPRISES, INC. UPON REQUEST OF HENDEE ENTERPRISES, INC.

CHECKED BY:	
DRAWN BY:	AD
FILE NAME:	FORCE 12
JOB NUMBER:	N/A
DOCUMENT DATE:	03/16/09

SHEET: D9

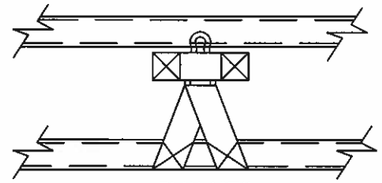

PLAN VIEW

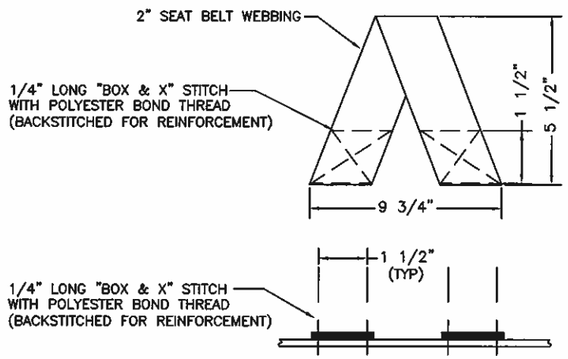

HANGER LOOP DETAIL

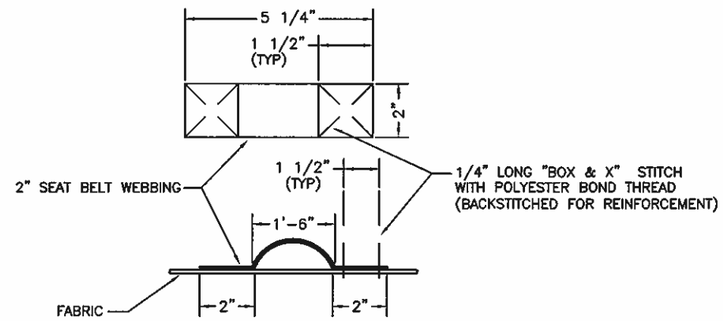

REINFORCING LOOP DETAIL

SCREEN ATTACHMENT LOOP DETAIL AT THE TOP OF SCREEN

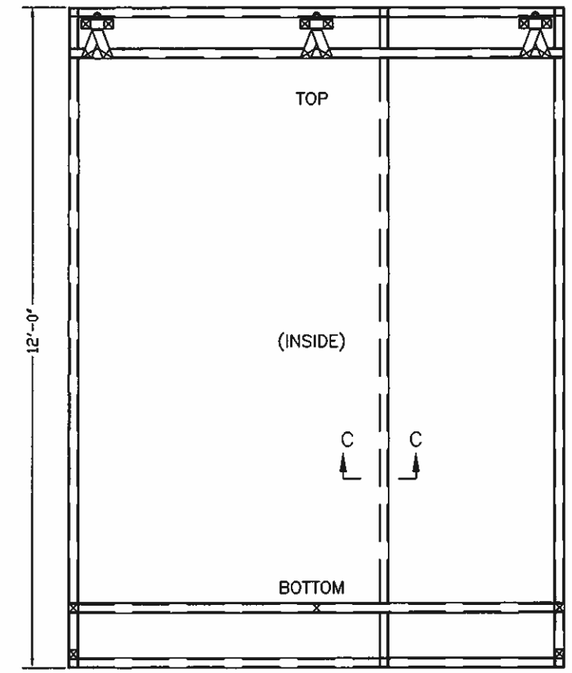

HURRICANE SCREEN ELEVATION

(INSIDE STITCHING DETAILS. THE SCREEN IS MANUFACTURED IN (3) STYLES; VERTICAL SEAM, HORIZONTAL SEAM, & NON-SEAMED OVERLAPPED FABRIC PANELS)

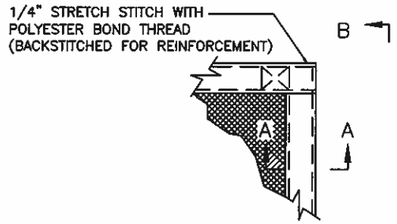

PLAN VIEW

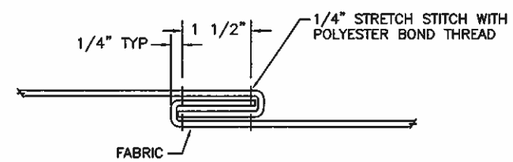

SECTION C

(HOOK SEAM DETAIL – VERTICAL OR HORIZONTAL)

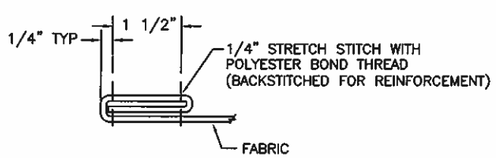

SECTION A

(DOUBLE HEM)

TYPICAL ON ALL PANEL EDGES

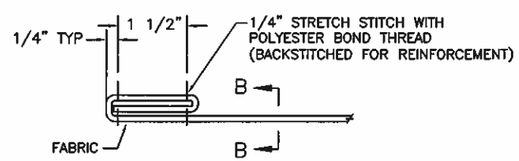

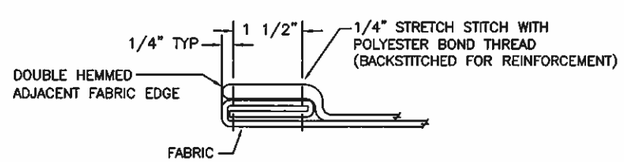

SECTION B

(CORNER HEM DETAIL)

James R. Bailey 6/8/13

STATE OF TEXAS
JAMES R. BAILEY
74911
LICENSED
PROFESSIONAL ENGINEER

Hendee Enterprises, Inc.
The Innovative Solutions Company
P.O. Box 4289, Houston, TX 77210-4289 8350 South Point Dr., Houston, TX 77054
(713) 796-2322, Fax (713) 796-4444, (800) 231-7276 (NetT), (800) 323-3841 (Texas)

EXPORT WARNING
EXPORT OF THIS DOCUMENT TO COUNTRIES OTHER THAN U.S. IS SUBJECT TO U.S. EXPORT ADMINISTRATION REGULATIONS.

COPYRIGHT
COPYRIGHT © 2002
HENDEE ENTERPRISES INC.
ALL RIGHTS RESERVED

CONSULTANTS:

James R. Bailey, P.E.
Texas PE # 74911
Platinum Risk Consulting LLC
4931 Chappel Hill Dr.
Missouri City, Texas 77459
281-403-2825
Texas Firm # 11044

CLIENT: HENDEE ENTERPRISES

LOCATION: HOUSTON, TX

TITLE: FORCE 12 – SERIES 500 – STRAP & BUCKLE

DATE: 10/31/12

REVISION: 0

BY:	REV	DATE	DESCRIPTION
KLL	0	10/31/12	TEXAS DEPARTMENT OF INSURANCE SUBMITTAL

THE DESIGNS, CONCEPTS, OPINIONS, AND OTHER SUBJECT INFORMATION, IN THE POSSESSION OF HENDEE ENTERPRISES, INC. AND IS SUBJECT TO ITS PROPRIETARY CONFIDENTIALITY, OR OTHERWISE, AND ARE THE PROPERTY OF HENDEE ENTERPRISES, INC. IT SHALL (1) NOT BE USED TO DUPLICATE OR ANY COPY THEREOF, OR THE CONTENTS OR ANY PART THEREOF OR THEREON, (2) NOT BE USED FOR ANY PURPOSE OTHER THAN THE PURPOSE FOR WHICH IT IS SUPPLIED, (3) NOT BE DISCLOSED, IN WHOLE OR IN PART, TO ANY PERSON OTHER THAN THE RECIPIENT, THEIR EMPLOYEES, AND (4) PROMPTLY RETURN THE DOCUMENT, OR THE PORTION THEREOF, AND ALL COPIES THEREOF, TO HENDEE ENTERPRISES, INC. UPON REQUEST.

CHECKED BY:	
DRAWN BY:	AD
FILE NAME:	FORCE 12
JOB NUMBER:	N/A
DOCUMENT DATE:	03/16/09

SHEET: D10

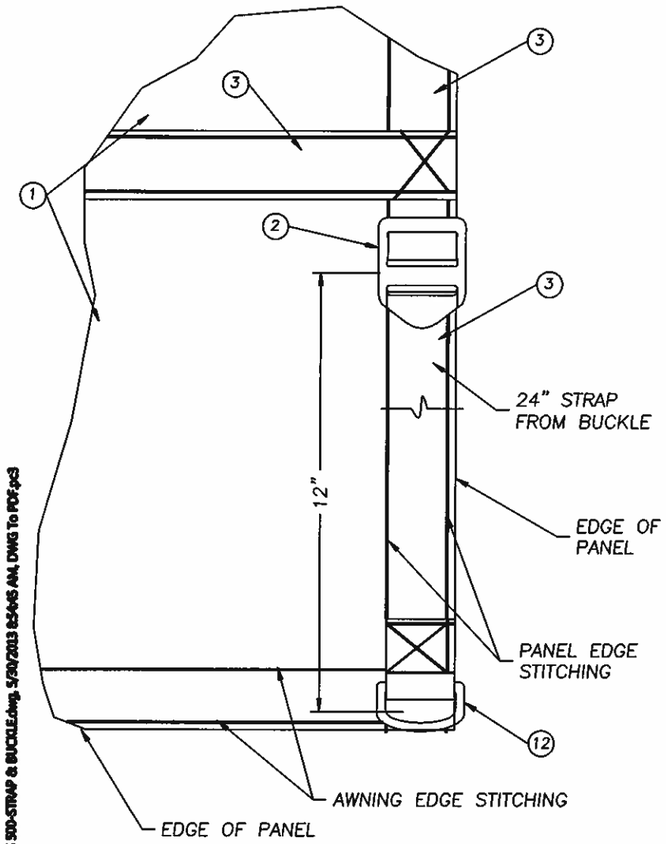

STITCHING DETAIL

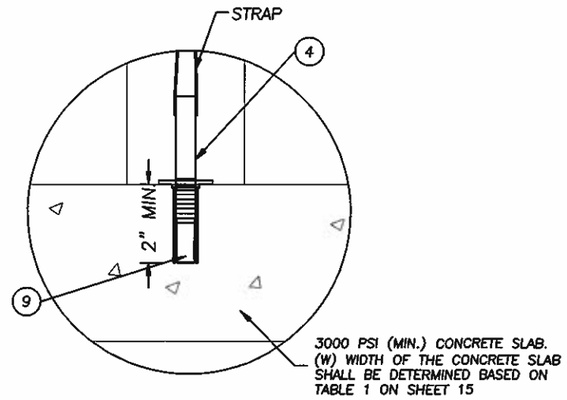

DETAIL "A"
SCREEN TO CONCRETE @ BOTTOM
DROP-IN ANCHOR IS INSTALLED VERTICALLY
(USE MIN. EDGE DISTANCE)

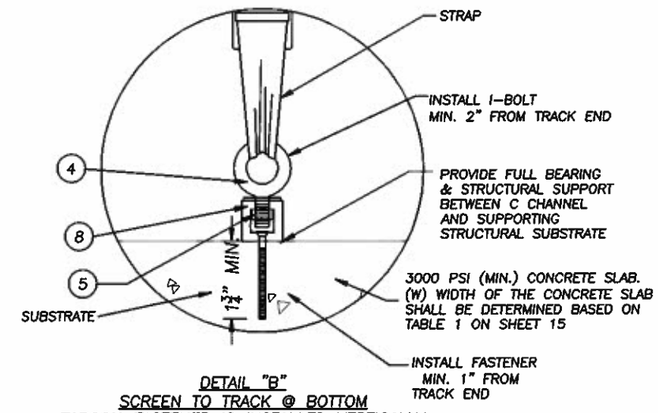

DETAIL "B"
SCREEN TO TRACK @ BOTTOM
TAPCON FASTENER IS INSTALLED VERTICALLY
(USE MIN. EDGE DISTANCE)

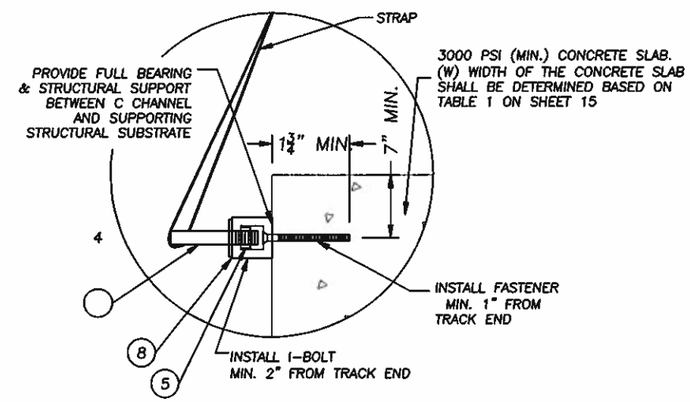

DETAIL "C"
SCREEN TO TRACK @ BOTTOM
TAPCON FASTENER IS INSTALLED HORIZONTALLY
(USE MIN. EDGE DISTANCE)

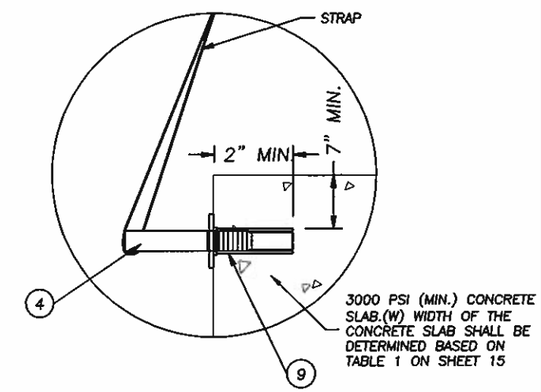

DETAIL "D"
SCREEN TO CONCRETE @ BOTTOM
DROP-IN ANCHOR IS INSTALLED HORIZONTALLY
(USE MIN. EDGE DISTANCE)

Rt: Reaction tensile force
Rs: Reaction shear force
Ft: Fastener allowable tensile load
Fs: Fastener allowable shear load

Reaction (Rt or Rs) is maximum absolute value for a + 30 PSF load w/ 22.5" strap spacing or a + 55 PSF load w/ 24.0" strap spacing, with reaction acting either @ 22.5" O.C. or @ 24.0" O.C.

Fastener (Ft or Fs) is minimum allowable value for a + 30 PSF load w/ 22.5" strap spacing or a + 55 PSF load w/ 24.0" strap spacing; values for Drop-in Anchors based on one fastener either @ 22.5" O.C. or @ 24.0" O.C.; values for Tapcons based on 4 fasteners @ 6" O.C.; values for #14 Wood Screw based on 4 fasteners @ 6" O.C. (no offset) or 5 fasteners @ 5" O.C. (offset).

DETAIL	Rt (lbs)	Rs (lbs)	Ft (lbs)	Fs (lbs)
A	941	675	1232	1410
B	941	675	1856	1500
C	1042	1183	1856	1500
D	1042	1183	1232	1410

James R. Bailey
6/8/13

STATE OF TEXAS
JAMES R. BAILEY
74911
LICENSED
PROFESSIONAL ENGINEER

Hendee Enterprises, Inc.
The Provider Solutions Company
P.O. Box 4999, Houston, TX 77210-4999 6330 Savoy Point Dr. Houston, TX 77054
(713) 796-2322, Fax (713) 796-0484, (800) 231-7279 (Nat'l), (800) 323-3841 (Texas)

EXPORT WARNING
DIVERSION CONTRARY TO U.S. LAW PROHIBITED. COUNTRIES OUTSIDE OF THE U.S. IS SUBJECT TO U.S. EXPORT ADMINISTRATION REGULATIONS.

COPYRIGHT
COPYRIGHT © 2002
HENDEE ENTERPRISES INC.
ALL RIGHTS RESERVED

CONSULTANTS:

James R. Bailey, P.E.
Texas PE # 74911
Thelmann Bible Consulting, LLC
4031 Chappell Hill Dr.
Missouri City, Texas 77459
281-403-3025
Texas Firm # 11944

CLIENT:	HENDEE ENTERPRISES
LOCATION:	HOUSTON, TX
TITLE:	FORCE 12 - SERIES 500 - STRAP & BUCKLE
DATE:	10/31/12
REVISION:	0

SYM	REV	DATE	DESCRIPTION
ALL	0	10/31/12	TEXAS DEPARTMENT OF INSURANCE SUBMITTAL

THE DESIGNS, CONCEPTS, CONFIDENTIAL AND TRADE SECRET INFORMATION IS THE PROPERTY OF HENDEE ENTERPRISES, INC. AND IS NOT TO BE DISCLOSED, REPRODUCED, TRANSMITTED, OR MADE AVAILABLE TO ANYONE OTHER THAN THE RECIPIENT WITHOUT THE WRITTEN CONSENT OF HENDEE ENTERPRISES, INC. IF ANY ITEM IS ACCEPTED AS THE PROPERTY OF HENDEE ENTERPRISES, INC. THE RECIPIENT AGREES TO RETURN THE DOCUMENT OR ANY COPY THEREOF TO HENDEE ENTERPRISES, INC. IF SHALL NOT THE LAW, THE RECIPIENT AGREES TO RETURN THE DOCUMENT OR ANY COPY THEREOF TO HENDEE ENTERPRISES, INC. IF SHALL NOT THE LAW, THE RECIPIENT AGREES TO DESTROY THE DOCUMENT OR THE COPY THEREOF, ON THE REQUEST OF HENDEE ENTERPRISES, INC. THE RECIPIENT AGREES TO NOTIFY HENDEE ENTERPRISES, INC. IMMEDIATELY IF THE RECIPIENT DISCLOSES, REPRODUCES, OR MAKES AVAILABLE THE DOCUMENT OR ANY COPY THEREOF TO ANYONE OTHER THAN THE RECIPIENT.

CHECKED BY:	
DRAWN BY:	AD
FILE NAME:	FORCE 12
JOB NUMBER:	N/A
DOCUMENT DATE:	03/16/09

SHEET: D11

FORCE 12 2013 TEXAS DEPARTMENT OF INSURANCE F12-SERIES-500-STRAP_AND_BUCKLE_SCREEN\F12-SERIES 500-STRAP & BUCKLE.dwg 5/30/2013 8:54:45 AM, DWG To PDF.pc3

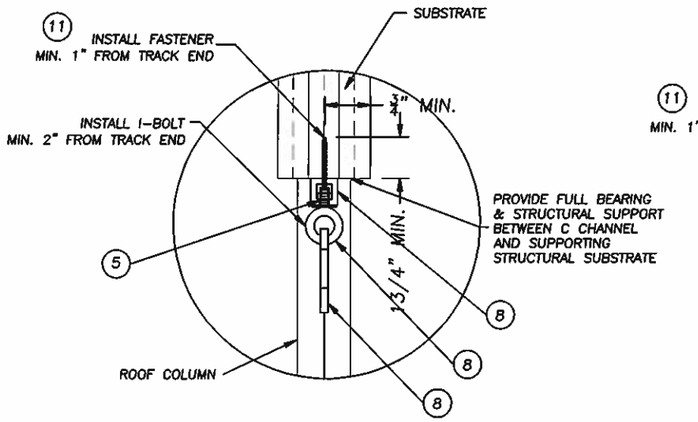

DETAIL "A"
SCREEN TO TRACK @ TOP
FASTENER IS INSTALLED HORIZONTALLY
(USE MIN. EDGE DISTANCE)

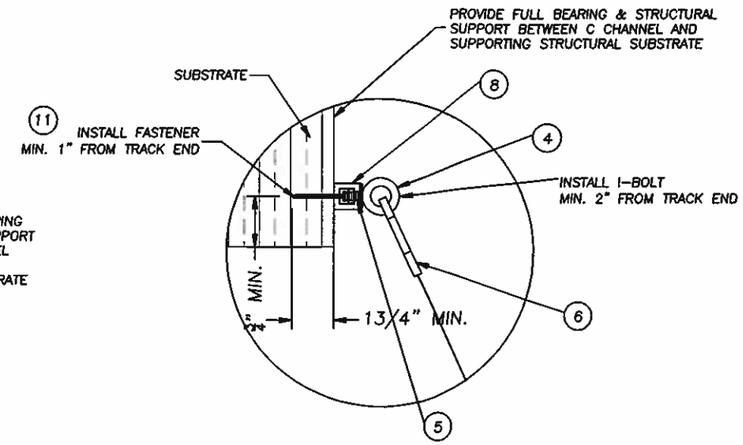

DETAIL "B"
SCREEN TO TRACK @ TOP
FASTENER IS INSTALLED HORIZONTALLY ON INSIDE
OF OPENING
(USE MIN. EDGE DISTANCE)

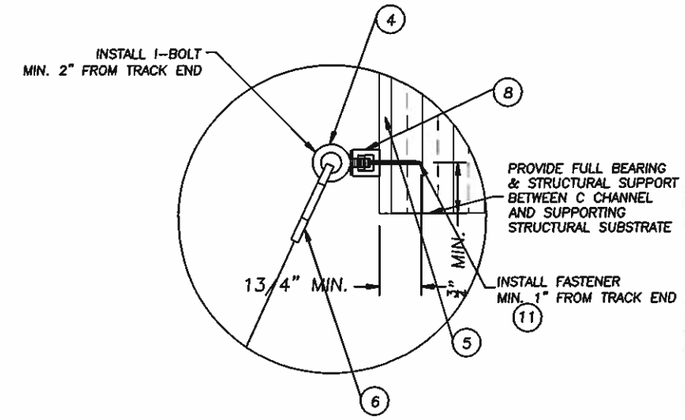

DETAIL "C"
SCREEN TO TRACK @ TOP
FASTENER IS INSTALLED HORIZONTALLY ON OUTSIDE
OF OPENING
(USE MIN. EDGE DISTANCE)

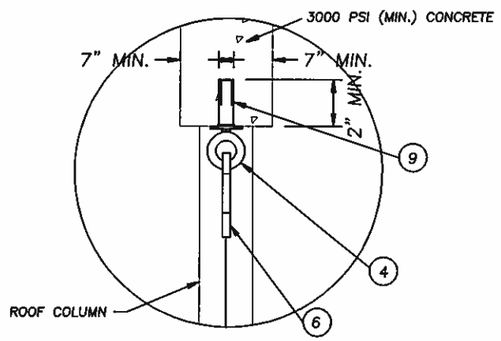

DETAIL "D"
SCREEN TO CONCRETE @ TOP
DROP-IN FASTENER IS INSTALLED VERTICALLY
(USE MIN. EDGE DISTANCE)

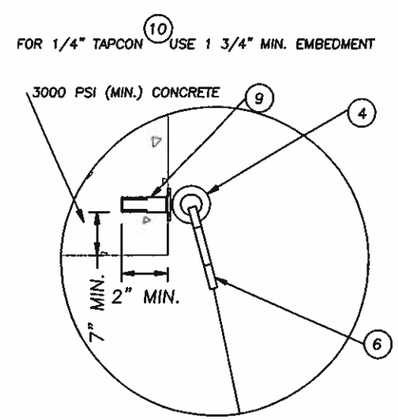

DETAIL "E"
SCREEN TO CONCRETE @ TOP
DROP-IN FASTENER IS INSTALLED HORIZONTALLY
ON INSIDE OF OPENING
(USE MIN. EDGE DISTANCE)

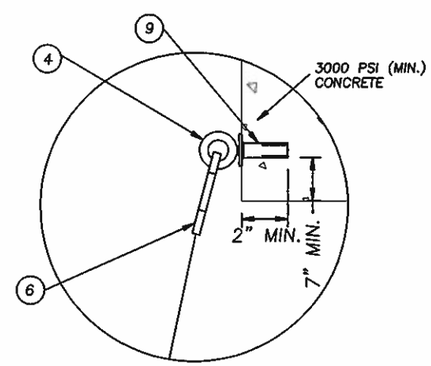

DETAIL "F"
SCREEN TO CONCRETE @ TOP
DROP-IN FASTENER IS INSTALLED HORIZONTALLY
ON OUTSIDE OF OPENING
(USE MIN. EDGE DISTANCE)

Rt: Reaction tensile force
Rs: Reaction shear force
Ft: Fastener allowable tensile load
Fs: Fastener allowable shear load

Reaction (Rt or Rs) is maximum absolute value for a + 60 PSF load w/ 22.5" strap spacing or a + 55 PSF load w/ 24.0" strap spacing, with reaction acting either @ 22.5" O.C. or @ 24.0" O.C.

Fastener (Ft or Fs) is minimum allowable value for a + 60 PSF load w/ 22.5" strap spacing or a + 55 PSF load w/ 24.0" strap spacing; values for Drop-in Anchors based on one fastener either @ 22.5" O.C. or @ 24.0" O.C.; values for Tapcons based on 4 fasteners @ 6" O.C.; values for #14 Wood Screw based on 4 fasteners @ 6" O.C. (no offset) or 5 fasteners @ 5" O.C. (offset).

DETAIL	Rt (lbs)	Rs (lbs)	Ft (lbs)	Fs (lbs)
A	941	675	1768	1080
B	1042	1183	2210	1350
C	1042	1183	2210	1350
D	941	675	1232	1410
E	1042	1183	1232	1410
F	1042	1183	1232	1410

James R. Bailey
6/8/13

STATE OF TEXAS
JAMES R. BAILEY
74911
LICENSED
PROFESSIONAL ENGINEER

Hendee Enterprises, Inc.
The Innovative Solutions Company
P.O. Box 4289, Houston, TX 77210-4289 9350 South Point Dr., Houston, TX 77054
(713) 796-2322, Fax (713) 796-0494, (800) 231-7275 (Nat'l), (800) 325-3641 (Texas)

EXPORT WARNING
THIS DOCUMENT MAY BE SUBJECT TO COUNTRIES OUTSIDE OF THE U.S. IS SUBJECT TO U.S. EXPORT ADMINISTRATION REGULATIONS.

COPYRIGHT
COPYRIGHT © 2002
HENDEE ENTERPRISES INC.
ALL RIGHTS RESERVED

CONSULTANTS:
James R. Bailey, P.E.
Texas PE # 74911
Hardman Bible Consulting LLC
4501 Chapel Hill Dr.
McKinney, Texas 75169
214-403-5255
Texas Firm # 10944

CLIENT:	HENDEE ENTERPRISES
LOCATION:	HOUSTON, TX
TITLE:	FORCE 12 - SERIES 500 - STRAP & BUCKLE
DATE:	10/31/12
REVISION:	0

REV	DATE	DESCRIPTION
0	10/31/12	TEXAS DEPARTMENT OF INSURANCE SUBMITTAL

THIS DOCUMENT, CONTAINING CONCEPTUAL AND TRADE SECRET INFORMATION, IS THE PROPERTY OF HENDEE ENTERPRISES, INC. AND IS NOT TO BE DISCLOSED TO OTHERS, IN WHOLE OR IN PART, WITHOUT THE WRITTEN PERMISSION OF HENDEE ENTERPRISES, INC. IT IS LOANED ONLY ON THE CONDITION THAT IT WILL NOT BE REPRODUCED, COPIED, OR OTHERWISE DISPOSED OF, NOR TO BE DISCLOSED OR MADE AVAILABLE TO ANY PERSON OR ENTITY WITHOUT THE WRITTEN PERMISSION OF HENDEE ENTERPRISES, INC. IT IS FURTHER LOANED SUBJECT TO THE AGREEMENT THAT ANY PERSON OR ENTITY RECEIVING THIS DOCUMENT, OR ANY PART THEREOF, SHALL ASSUME THE RESPONSIBILITY OF PROTECTING IT FROM LOSS, DAMAGE, OR DESTRUCTION WHILE IN THEIR POSSESSION, AND SHALL RETURN IT TO HENDEE ENTERPRISES, INC. UPON REQUEST.

CHECKED BY:	
DRAWN BY:	AD
FILE NAME:	FORCE 12
JOB NUMBER:	N/A
DOCUMENT DATE:	03/16/09

SHEET: D12

H:\FORCE 12\2012\TEXAS DEPARTMENT OF INSURANCE\FL12-SERIES-500-STRAP_AND_BUCKLE_SCREEN\FL12-SERIES 500-STRAP & BUCKLE.dwg 6/20/2013 8:51:17 AM, DWG To PDF.pc3

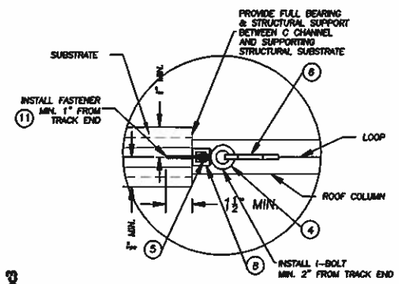

DETAIL "A"
SCREEN TO TRACK @ SIDE [LOOP END]
FASTENER IS INSTALLED HORIZONTALLY
(USE MIN. EDGE DISTANCE)

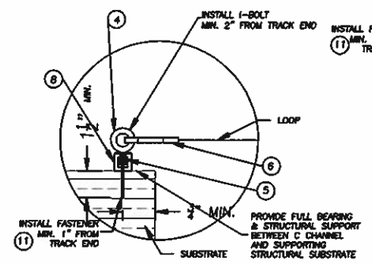

DETAIL "B"
SCREEN TO TRACK @ TOP [LOOP END]
FASTENER IS INSTALLED HORIZONTALLY ON INSIDE OF OPENING
(USE MIN. EDGE DISTANCE)

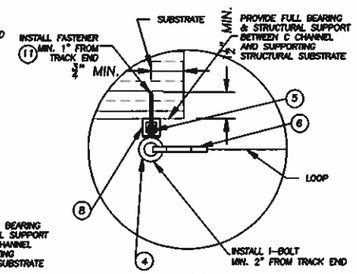

DETAIL "C"
SCREEN TO TRACK @ TOP [LOOP END]
FASTENER IS INSTALLED HORIZONTALLY ON OUTSIDE OF OPENING
(USE MIN. EDGE DISTANCE)

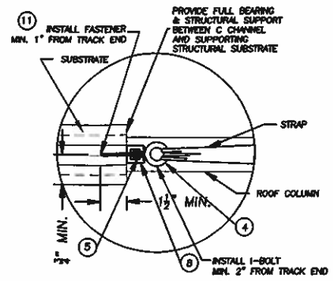

DETAIL "D"
SCREEN TO TRACK @ SIDE [STRAP END]
FASTENER IS INSTALLED HORIZONTALLY
(USE MIN. EDGE DISTANCE)

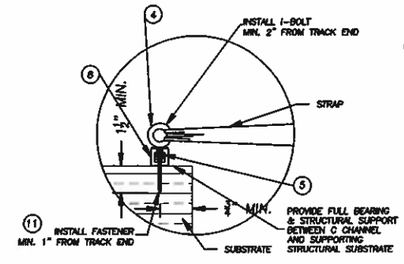

DETAIL "E"
SCREEN TO TRACK @ TOP [STRAP END]
FASTENER IS INSTALLED HORIZONTALLY ON INSIDE OF OPENING
(USE MIN. EDGE DISTANCE)

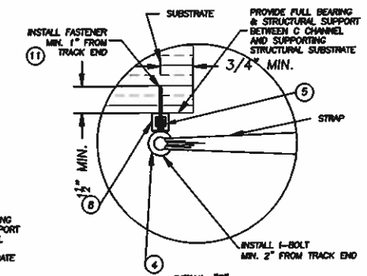

DETAIL "F"
SCREEN TO TRACK @ TOP [STRAP END]
FASTENER IS INSTALLED HORIZONTALLY ON OUTSIDE OF OPENING
(USE MIN. EDGE DISTANCE)

FOR 1/4" TAPCON (10) USE 1 3/4" MIN. EMBEDMENT

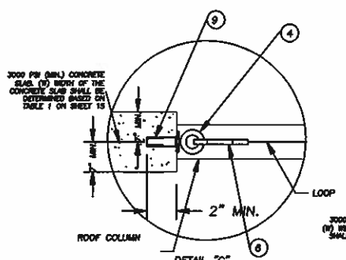

DETAIL "G"
SCREEN TO CONCRETE @ TOP [LOOP END]
DROP-IN FASTENER IS INSTALLED HORIZONTALLY
(USE MIN. EDGE DISTANCE)

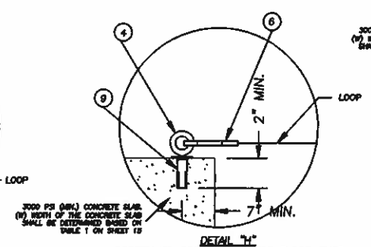

DETAIL "H"
SCREEN TO CONCRETE @ TOP [LOOP END]
DROP-IN FASTENER IS INSTALLED HORIZONTALLY ON INSIDE OF OPENING
(USE MIN. EDGE DISTANCE)

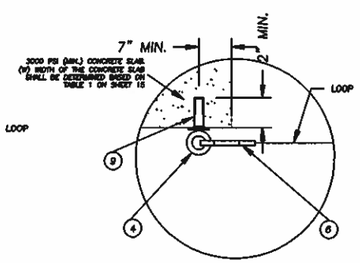

DETAIL "I"
SCREEN TO CONCRETE @ TOP [LOOP END]
DROP-IN FASTENER IS INSTALLED HORIZONTALLY ON OUTSIDE OF OPENING
(USE 2" MIN. EDGE DISTANCE)

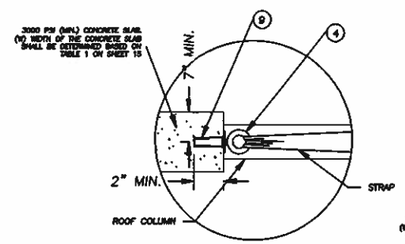

DETAIL "J"
SCREEN TO CONCRETE @ TOP [STRAP END]
DROP-IN FASTENER IS INSTALLED HORIZONTALLY
(USE 2" MIN. EDGE DISTANCE)

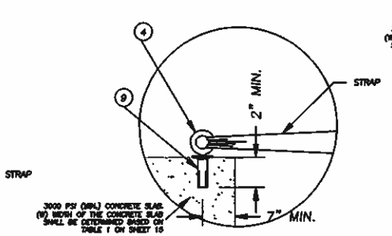

DETAIL "K"
SCREEN TO CONCRETE @ TOP [STRAP END]
DROP-IN FASTENER IS INSTALLED HORIZONTALLY ON INSIDE OF OPENING
(USE 2" MIN. EDGE DISTANCE)

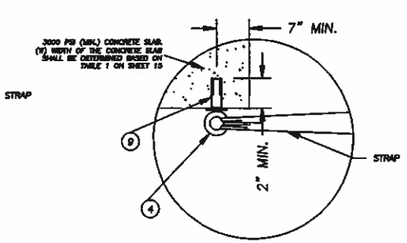

DETAIL "L"
SCREEN TO CONCRETE @ TOP [STRAP END]
DROP-IN FASTENER IS INSTALLED HORIZONTALLY ON OUTSIDE OF OPENING
(USE 2" MIN. EDGE DISTANCE)

Rt: Reaction tensile force
Rs: Reaction shear force
Ft: Fastener allowable tensile load
Fs: Fastener allowable shear load

Reaction (Rt or Rs) is maximum absolute value for a + 60 PSF load w/ 22.5" strap spacing or a + 55 PSF load w/ 24.0" strap spacing, with reaction acting either @ 22.5" O.C. or @ 24.0" O.C.

Fastener (Ft or Fs) is minimum allowable value for a + 60 PSF load w/ 22.5" strap spacing or a + 55 PSF load w/ 24.0" strap spacing; values for Drop-in Anchors based on one fastener either @ 22.5" O.C. or @ 24.0" O.C.; values for Tapcons based on 4 fasteners @ 6" O.C.; values for #14 Wood Screw based on 4 fasteners @ 6" O.C. (no offset) or 5 fasteners @ 5" O.C. (offset)

DETAIL	Rt (lbs)	Rs (lbs)	Ft (lbs)	Fs (lbs)
A	941	675	1768	1080
B	675	941	1768	1350
C	675	941	1768	1350
D	941	675	1768	1350
E	675	941	1768	1350
F	675	941	1768	1350
G	941	675	1232	1410
H	675	941	1232	1410
I	675	941	1232	1410
J	941	675	1232	1410
K	675	941	1232	1410
L	675	941	1232	1410

James R. Bailey 6/8/13
STATE OF TEXAS
JAMES R. BAILEY
74911
LICENSED PROFESSIONAL ENGINEER

Hendee Enterprises, Inc.
The Innovative Solutions Company
P.O. Box 4288, Houston, TX 77210-4288 9339 South Point Dr., Houston, TX 77054
(713) 748-2322, Fax (713) 748-0484, (800) 231-7275 (Nat'l), (800) 323-3641 (Texas)

EXPORT WARNING:
EXPORT OF THIS DOCUMENT TO COUNTRIES OUTSIDE OF THE U.S. IS SUBJECT TO U.S. EXPORT ADMINISTRATION REGULATIONS.

COPYRIGHT
COPYRIGHT © 2003
HENDEE ENTERPRISES, INC.
ALL RIGHTS RESERVED

CONSULTANTS:
James R. Bailey, P.E.
Texas PE # 74911
Performance Walls Consulting LLC
4501 Chappell Hill Dr.
Missouri City, Texas 77459
281-403-3325
Texas Firm # 11044

BY:	REV:	DATE	DESCRIPTION
KAL	0	10/31/12	TEXAS DEPARTMENT OF INSURANCE SUBMITTAL

CLIENT: HENDEE ENTERPRISES
LOCATION: HOUSTON, TX
TITLE: FORCE 12 – SERIES 500 – STRAP & BUCKLE
DATE: 10/31/12
REVISION: 0

CHECKED BY:
DRAWN BY: AD
FILE NAME: FORCE 12
JOB NUMBER: N/A
DOCUMENT DATE: 03/16/09

SHEET: D13

J:\FORCE 12\20013 TEXAS DEPARTMENT OF INSURANCE\F12-SERIES-500-STRAP_AND_BUCKLE_SCREEN\F12-SERIES 500-STRAP & BUCKLE.dwg 6/4/2013 10:24:08 AM, DWG To PDF.pc3

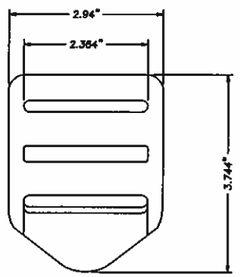

(2) .22" THK. ACETAL HOSTAFORM C
TIE DOWN LADDERLOC ACETAL HOSTAFORM C

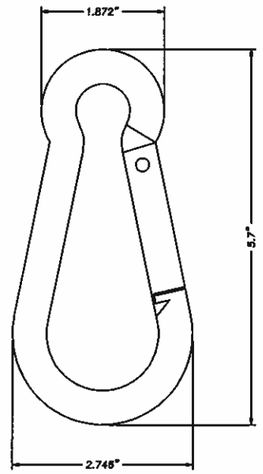

(6) 3/4" SPRING SNAP
.434" THK. STAINLESS STEEL BAR

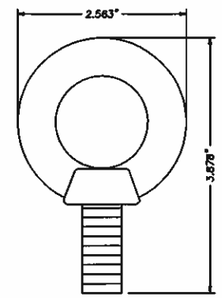

(4) ø1/2" SHOULDERED EYEBOLT
STAINLESS STEEL 1/2" THK. BAR

DESCRIPTION

Item	DESCRIPTION	Material
1	HURRICANE SCREEN (SEE HURRICANE SCREEN CONSTRUCTION SHEET 1)	POLYPROP.
2	TIE DOWN LADDERLOC (ITW NEXUS, ACETAL HOSTAFORM C)	ACETAL
3	STRAP (SEE SHEET 8)	
4	1/2" EYEBOLT (CHICAGO #5, QUALITY MARINE HARDWARE, OR EQUAL)	S STEEL
5	1/2" UNI-STRUT NUT (STAINLESS STEEL, W/OUT SPRING)	S STEEL
6	3/4" SPRING SNAP (CAMMBELL #B765068, SUNCOR, OR EQUAL)	S STEEL
7	1/2" FLAT WASHER (.108" THK. STEEL)	STEEL
8	EXTRUDED ALUM. SCREEN TRACK (.325" WALL, 6063-T6)	ALUM.
9	1/2" DROP-IN ANCHOR (BY POWERS RAWL OR EQUAL)	S STEEL
10	TAPCON 1/4" x 3 1/4" LG. (ELCO) W/ 1 3/4" (MIN. EMBEDMENT)	STEEL
11	#14 WOOD SCREW INTO WOOD WITH 1 1/2" MIN. EMBEDMENT	S STEEL
12	LADDERLOC LOOP (ITW NEXUS, ACETAL HOSTAFORM C)	ACETAL
13	LEFT BLANK	–
14	1/2" EYEBOLT (CHICAGO #7,QUALITY MARINE HARDWARE, OR EQUAL)	S STEEL
15	1/2" FLAT WASHER (.108" THK. STEEL)	STEEL

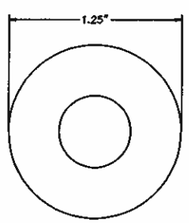

(7) 1/2" FLAT WASHER
.108" THK. STEEL

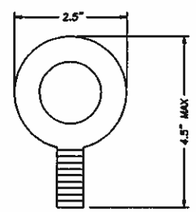

(14) 1/2" EYEBOLT
STAINLESS STEEL 1/2" THK. BAR

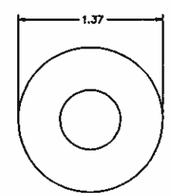

(15) 1/2" FLAT WASHER
.108" THK. STEEL

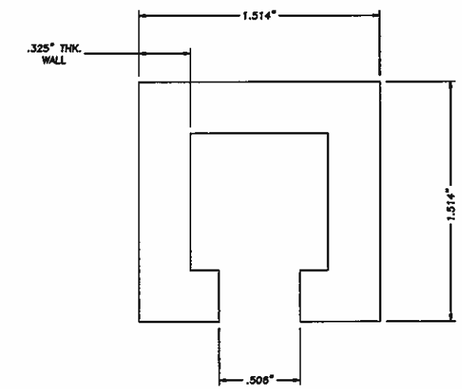

(8) EXTRUDED ALUMINUM SCREEN TRACK
.325" THK. 6063-T6 ALUMINUM

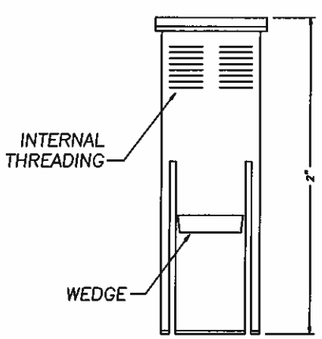

(9) ø1/2" DROP-IN ANCHOR
STAINLESS STEEL

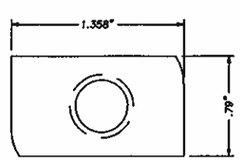

(5) 1/2" UNI-STRUT NUT W/OUT SPRING
.364" THK. STAINLESS STEEL

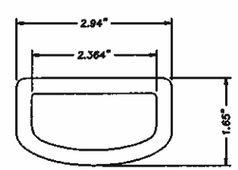

(12) LADDERLOC LOOP
.161" THK. ACETAL HOSTAFORM C

James R. Bailey 6/8/13
STATE OF TEXAS
JAMES R. BAILEY
74911
LICENSED
PROFESSIONAL ENGINEER

Hendee Enterprises, Inc.
The Innovative Solutions Company
P.O. Box 4388, Houston, TX 77210-4388 9380 South Point Dr., Houston, TX 77054
(713) 796-2322, Fax (713) 796-0494, (800) 231-7270 (Net1), (800) 323-3641 (Texas)

EXPORT CONTROL WARNING: EXPORT TO COUNTRIES OUTSIDE OF THE U.S. IS SUBJECT TO U.S. EXPORT ADMINISTRATION REGULATIONS.

COPYRIGHT
COPYRIGHT © 2002
HENDEE ENTERPRISES INC.
ALL RIGHTS RESERVED

CONSULTANTS:
James R. Bailey, P.E.
Texas PE # 74911
Workman Bible Consulting S.L.C
4031 Chapel Hill Blv.
Missouri City, Texas 77459
281-403-3535
Texas Firm # 11944

CLIENT: HENDEE ENTERPRISES
LOCATION: HOUSTON, TX
TITLE: FORCE 12 - SERIES 500 - STRAP & BUCKLE
DATE: 10/31/12
REVISION: 0

BY:	REV.	DATE	DESCRIPTION
KLL	0	10/31/12	TEXAS DEPARTMENT OF INSURANCE SUBMITTAL

THE EXCLUSIVE, COMPANY CONFIDENTIAL AND TRADE SECRET INFORMATION, IS THE PROPERTY OF HENDEE ENTERPRISES, INC. AND IS NOT TO BE DISCLOSED, REPRODUCED, OR DISTRIBUTED TO ANY PERSON OR ENTITY WITHOUT THE EXPRESS WRITTEN PERMISSION OF HENDEE ENTERPRISES, INC. ANY USE OF THE INFORMATION CONTAINED HEREIN, IN WHOLE OR IN PART, FOR ANY PURPOSE OTHER THAN THE PURPOSE FOR WHICH IT IS DISCLOSED IS PROHIBITED. THE RECEIPT OF THIS DOCUMENT OR ANY PART THEREOF CONSTITUTES ACCEPTANCE OF THE FOREGOING RESTRICTIONS. IF YOU DO NOT AGREE TO THESE RESTRICTIONS, YOU MUST RETURN THIS DOCUMENT TO HENDEE ENTERPRISES, INC. IMMEDIATELY. THE RECEIPT OF THIS DOCUMENT OR ANY PART THEREOF CONSTITUTES A WAIVER OF ANY RIGHTS TO THE INFORMATION CONTAINED HEREIN. THE RECEIPT OF THIS DOCUMENT OR ANY PART THEREOF CONSTITUTES A WAIVER OF ANY RIGHTS TO THE INFORMATION CONTAINED HEREIN. THE RECEIPT OF THIS DOCUMENT OR ANY PART THEREOF CONSTITUTES A WAIVER OF ANY RIGHTS TO THE INFORMATION CONTAINED HEREIN. THE RECEIPT OF THIS DOCUMENT OR ANY PART THEREOF CONSTITUTES A WAIVER OF ANY RIGHTS TO THE INFORMATION CONTAINED HEREIN. THE RECEIPT OF THIS DOCUMENT OR ANY PART THEREOF CONSTITUTES A WAIVER OF ANY RIGHTS TO THE INFORMATION CONTAINED HEREIN.

CHECKED BY:	
DRAWN BY:	AD
FILE NAME:	FORCE 12
JOB NUMBER:	N/A
DOCUMENT DATE:	03/16/09

SHEET: D14

J:\FORCE 12\30013 TEXAS DEPARTMENT OF INSURANCE\F12-SERIES-500-STRAP_AND_BUCKLE_SCREEN\F12-SERIES 500-STRAP & BUCKLE.dwg, 5/30/2013 8:51:50 AM, DWG To PDF.pc3

CONCRETE SLAB/FOUNDATION DIMENSIONS

TABLE 1		SLAB WIDTH IN FT.								
WIND PRESSURE (psf)	SLAB THICKNESS (in)	SCREEN HEIGHT (ft)								
		12			10			8		
		CASE 1	CASE 2	CASE 3	CASE 1	CASE 2	CASE 3	CASE 1	CASE 2	CASE 3
60	4	36.6	43.6	28.8	31.2	37.6	24.2	25.8	31.5	19.6
	5	29.2	34.9	23.0	25.0	30.1	19.3	20.6	25.2	15.7
ANCHORS	6	24.4	29.1	19.2	20.8	25.1	16.1	17.2	21.0	13.0
22 1/2" O.C.	7	20.9	24.9	16.4	19.7	21.5	13.8	14.7	18.0	11.2
	8	18.3	21.8	14.4	15.6	16.1	12.1	12.9	15.8	9.8
55	4	33.9	40.7	26.5	29.0	35.1	22.3	24.0	29.4	18.0
	5	27.1	32.5	21.2	23.2	28.0	17.8	19.2	23.5	14.4
ANCHORS	6	22.6	27.1	17.6	19.3	23.4	14.8	16.0	19.6	12.0
24" O.C.	7	19.4	23.2	15.1	16.6	20.0	12.7	13.7	16.8	10.3
	8	17.0	20.3	13.2	14.5	17.5	11.1	12.0	14.7	9.0
50	4	31.2	37.7	24.1	26.7	32.5	20.3	22.1	27.3	16.4
	5	25.0	30.2	19.3	21.4	26.0	16.2	17.7	21.8	13.1
ANCHORS	6	20.8	25.1	16.1	17.8	21.7	13.6	14.7	18.2	11.0
24" O.C.	7	17.9	21.5	13.8	15.3	18.6	11.6	12.6	15.6	9.4
	8	15.6	18.8	12.1	13.4	16.2	10.2	11.1	13.6	8.2
40	4	35.8	31.6	19.5	27.1	27.3	16.4	18.3	22.9	13.3
	5	20.6	25.3	15.6	17.6	21.8	13.1	14.6	18.3	10.6
ANCHORS	6	17.2	21.1	13.0	14.7	18.2	10.9	12.2	15.3	8.8
24" O.C.	7	14.7	18.1	11.1	12.6	15.6	9.4	10.5	13.1	7.6
	8	12.9	15.8	9.7	11.1	13.7	8.2	9.2	11.5	6.6

TABLE 1 NOTES:

1. *WIDTH IS MEASURED PERPENDICULAR TO SCREEN.*
2. *THE BUILDING FOUNDATION IS ASSUMED TO PROVIDE SUFFICIENT LATERAL SUPPORT TO PREVENT SLIDING TOWARDS THE BUILDING. IF THE SLAB DOES NOT PROVIDE LATERAL STABILITY, ASSUME CASE 2 FOR ALL INSTALLATIONS.*
3. *CASE 1 – VERTICAL INSTALLATION*
   CASE 2 – VERTICAL INSTALLATION PITCHED OUTWARD.
   CASE 3 – VERTICAL INSTALLATION INWARD (SEE DETAIL 1/4).
4. *IF SUFFICIENT LATERAL SUPPORT IS PRESENT TO RESTRAIN MOVEMENT OF THE SLAB AWAY FROM THE EXTERIOR WALL (SEE SHEET 2 AND 4), THEN THE REQUIRED SLAB WIDTH IN TABLE 1 MAY BE MULTIPLIED BY A FACTOR OF 0.55 REDUCTION*

FASTENER NOTES:

FASTENERS AT SILL:

1. *FASTENERS ARE LOCATED PER STRAP LOCATIONS, 24" O.C. FOR WIND PRESSURES <55 PSF, AND 22 1/2" O.C. FOR PRESSURES FROM 55 TO 60 PSF.*
2. *FASTENER TYPES:*
   CONCRETE – POWERS 1/2" DIA. DROP–IN ANCHOR. (2" MIN. EMBEDMENT) OR EQUAL.

FASTENERS AT HEAD/JAMB

1. *STRAPS ARE ATTACHED TO EYE BOLTS, WHICH ARE INSTALLED IN THE C–TRACK 24" O.C. FOR WIND PRESSURES <55 PSF, AND 22 1/2" FOR PRESSURES 55 TO 60 PSF.*
2. *C–CHANNEL IS ANCHORED TO STRUCTURE AT HEAD FOR VERTICAL INSTALLATIONS AND AT BOTH JAMBS FOR HORIZONTAL INSTALLATIONS.*
3. *FASTENER TYPES:*
   A. *1/4" DIA. ELCO TAPCON INTO 3000 PSI CONCRETE WITH 1 3/4" MIN. EMBEDMENT AND 2" MIN. EDGE DISTANCE.*
   B. *1/4" DIA. ELCO TAPCON INTO 3200 PSI CONCRETE WITH 1 3/4" MIN. EMBEDMENT AND 2" MIN. EDGE DISTANCE.*
   C. *1/4" DIA ELCO TAPCON INTO HOLLOW CMU BLOCK WITH 1 1/4" MIN. EMBEDMENT AND 2" MIN. EDGE DISTANCE.*
   D. *#14 WOOD SCREW INTO WOOD WITH 1 1/2" MIN. EMBEDMENT AND 3/4" MIN. EDGE DISTANCE*
4. *FASTENERS ARE INSTALLED 1" FROM END OF TRACK AND SPACED PER TABLE 2 BELOW.*

TABLE 2	FASTENER SPACING (in)				
SCREEN HEIGHT (ft)	FASTENER TYPE	WIND PRESSURE (psf)			
		60	55	50	40
12	A	6	6	7	9
	B	6	6	7	9
	C	4	4	4	6
	D	6	6	7	9
10	A	7	7	8	10
	B	7	7	8	10
	C	4	4	5	7
	D	7	7	8	10
8	A	9	9	10	12
	B	9	9	10	12
	C	6	6	7	10
	D	9	9	10	12

SCREEN OFFSET AT BASE

TABLE 3	
HEIGHT	OFFSET DISTANCE (in)
6'–0"	1'–10"
8'–0"	2'–8"
10'–0"	3'–10"
12'–0"	4'–10"

James R. Bailey 6/8/13

STATE OF TEXAS
JAMES R. BAILEY
74911
LICENSED PROFESSIONAL ENGINEER

Hendee Enterprises, Inc.
The Innovative Solutions Company
P.O. Box 4289, Houston, TX 77210–4289 8350 South Point Dr., Houston, TX 77054
(713) 796–2322, Fax (713) 796–0464, (800) 231–7275 (Nat'l), (800) 323–3641 (Texas)

EXPORT PLANNING
EXPORT OF EQUIPMENT TO COUNTRIES OUTSIDE OF THE U.S. IS SUBJECT TO U.S. EXPORT ADMINISTRATION REGULATIONS.

COPYRIGHT
COPYRIGHT © 2003
HENDEE ENTERPRISES, INC.
ALL RIGHTS RESERVED

CONSULTANTS:
James R. Bailey, P.E.
Texas PE # 74911
Platinum Risk Consulting L.L.C
4931 Chapel Hill Dr.
Missouri City, Texas 77459
281–403–2825
Texas Firm # 11844

CLIENT: HENDEE ENTERPRISES
LOCATION: HOUSTON, TX
TITLE: FORCE 12 – SERIES 500 – STRAP & BUCKLE
DATE: 10/31/12
REVISION: 0

BY:	REV.	DATE	DESCRIPTION
KLL	0	10/31/12	TEXAS DEPARTMENT OF INSURANCE SUBMITTAL

THIS DOCUMENT, CONTAINING CONFIDENTIAL AND TRADE SECRET INFORMATION, IS THE PROPERTY OF HENDEE ENTERPRISES, INC. AND IS SUBJECT TO THE NDA, NON-DISCLOSURE AGREEMENT, THE RECEIPT OF WHICH IS ACKNOWLEDGED BY THE RECIPIENT. THE RECIPIENT AGREES TO HOLD THE DOCUMENT IN STRICT CONFIDENCE AND ACCEPTS THE RESTRICTIONS OF HENDEE ENTERPRISES, INC. IF HELD (1) NOT USED, TO DISCLOSE OR ANY DOCUMENTS OR ANY INFORMATION CONTAINED THEREIN TO ANY PERSON OTHER THAN THOSE PERSONS AUTHORIZED BY THE NDA TO RECEIVE SUCH DOCUMENTS OR INFORMATION, (2) NOT DISCLOSE TO OTHERS EXISTENCE OR SUBJECT MATTER OF THE NDA OR THE FACT THAT HENDEE ENTERPRISES, INC. IS PROVIDING DOCUMENTS OR INFORMATION TO THE RECIPIENT, (3) NOT USE THE DOCUMENTS OR INFORMATION FOR ANY PURPOSE OTHER THAN THE PROJECT, (4) NOT COPY, REPRODUCE, OR TRANSFER THE DOCUMENTS OR INFORMATION, AND (5) SUBMIT, UPON REQUEST OF HENDEE ENTERPRISES, INC.

CHECKED BY:
DRAWN BY: AD
FILE NAME: FORCE 12
JOB NUMBER: N/A
DOCUMENT DATE: 03/18/09

SHEET: D15