GENERAL NOTES:

1. ROLL–UP SHUTTER SHOWN ON THIS PRODUCT EVALUATION DOCUMENT (P.E.D.) HAS BEEN VERIFIED FOR COMPLIANCE IN ACCORDANCE WITH THE 2006 EDITIONS OF THE INTERNATIONAL BUILDING CODE, (I.B.C.) AND INTERNATIONAL RESIDENTIAL CODE, (I.R.C.) WITH THE 2006 TEXAS REVISIONS, EFFECTIVE JANUARY 1, 2008.
ROLL UP SHUTTER SHALL BE INSTALLED AT SEAWARD AND INLAND AREAS, AS DEFINED BY THE TEXAS DEPARTMENT OF INSURANCE.
DESIGN WIND LOADS SHALL BE DETERMINED AS PER SECTION 1609 OF THE INTERNATIONAL BUILDING CODE, FOR A BASIC WIND SPEED AS REQUIRED BY THE JURISDICTION WHERE SHUTTER WILL BE INSTALLED, AND FOR A DIRECTIONALITY FACTOR Kd = 0.85, IN ACCORDANCE WITH ASCE 7–05 STANDARD.

ROLL UP SHUTTER ADEQUACY FOR IMPACT AND FATIGUE RESISTANCE HAS BEEN VERIFIED IN ACCORDANCE WITH SECTIONS 1609.1.2 AND R301.1.3 OF THE ABOVE MENTIONED CODES RESPECTIVELY, PER FENESTRATION TESTING LAB REPORTS # 4195, 4196, 4197, 4198, 4199, 4200, 4202, 4203, 4204, 4205, 4206, 4208, 4211, 4212, 4214, 4215, 4217, 4219, 4221, 4223, 4224, 4226, 4227, 4228, 4229, 4230, 4232, 4233, 4234, 4235, 4236, 4239 & 4258, PER FLORIDA BUILDING CODE PROTOCOLS TAS–201, 202 & 203.

2. ALL ALUMINUM EXTRUSIONS SHALL BE ALUMINUM ASSOCIATION 6063–T6 ALLOY & TEMPER (UNLESS OTHERWISE NOTED). THE THICKNESS OF ALL EXTRUSIONS SHALL BE AS SHOWN ON THIS DRAWING.

3. ALL SCREWS & BOLTS INSTALLED AT SEAWARD AREAS TO BE STAINLESS STEEL 304 OR 316 AISI SERIES AND MEET ASTM A167, OR HOT DIPPED GALVANIZED(AFTER FABRICATION) CARBON STEEL AS PER ASTM A123 OR ASTM A153, OR HOT DIPPED GALVANIZED OR GALVANNEALED(PRIOR TO FABRICATION) AND MEET ASTM A653 WITH 50 ksi YIELD STRENGTH AND 90 ksi TENSILE STRENGTH, PER 2006 TEXAS REVISIONS TO SECTION 1716.1.1 OF THE 2006 I.B.C. AND SECTION R325.1.1 OF THE 2006 I.R.C.

4. ALL SCREWS & BOLTS INSTALLED AT INLAND I AREAS TO BE STAINLESS STEEL 304 OR 316 AISI SERIES AND MEET ASTM A167, OR HOT DIPPED GALVANIZED(AFTER FABRICATION) CARBON STEEL AS PER ASTM A123 OR ASTM A153, OR HOT DIPPED GALVANIZED OR GALVANNEALED(PRIOR TO FABRICATION) AND MEET ASTM A653; HOT DIP GALVANIZED OR ELECTRO GALVANIZED PER ASTM A641, MECHANICALLY DEPOSITED ZINC COATINGS PER ASTM B695 OR ELECTRO DEPOSITED ZINC COATINGS PER ASTM B633, PER THE 2006 TEXAS REVISIONS TO SECTION 1716.1.2 OF THE 2006 I.B.C. AND TO SECTION R325.1.2 OF THE 2006 I.R.C.

5. STORM BARS AT FLOOR AND CEILING MOUNTING INSTALLATIONS MAY BE REMOVABLE AT NON HURRICANE CONDITIONS. HOWEVER, EACH STORM BAR SHALL BEAR A PERMANENT LABEL IN A VISIBLE PLACE WITH A WARNING NOTE INSTRUCTING THE TENANT OR OWNER THAT STORM BARS MUST BE INSTALLED WITH CORRESPONDING HARDWARE DURING PERIODS OF HURRICANE WARNING AND THAT ROLL UP SHUTTERS WILL NOT OFFER HURRICANE PROTECTION UNLESS ALL STORM BAR ARE INSTALLED AS DIRECTED.

6. REMOVABLE STORM BARS SHALL BE STORED IN A CONSPICUOUS PLACE WITH EASY AND IMMEDIATE ACCESS SO THAT THEY CAN BE REACHED AND INSTALLED ANY TIME (HURRICANE CONDITIONS OR NOT) SLATS ARE ROLLED DOWN. THE EFFECT OF THE SLATS ROLLED DOWN WITHOUT STORM BARS IS; THOSE SLATS WILL SLIP OUT OF TRACK DUE TO THE DEFLECTION CAUSED BY WIND FORCES.
WHEN REMOVING STORM BARS, ONE STORM BAR SHALL ALWAYS BE LEFT INSTALLED (SHALL NOT BE REMOVED). THIS CONDITION IS ONLY REQUIRED FOR HEADER SPANS EQUAL OR GREATER THAN 12'–0".

7. ANCHORS TO WALL FOR SIDE RAILS & BOX CONNECTION SHALL BE AS FOLLOWS: (UNLESS OTHERWISE NOTED)
(A) TO EXISTING POURED CONCRETE: (Min. f'c=3192 psi).
– 1/4"ø TAPCON ANCHORS MANUFACTURED BY ITW BUILDEX INC.

NOTES:
A.1) MINIMUM EMBEDMENT OF TAPCON ANCHORS INTO POURED CONCRETE IS 1 3/4". NO EMBEDMENT INTO STUCCO SHALL BE CONSIDERED AS PART OF THE REQUIRED EMBEDMENT.

A.2) IN CASE THAT PRECAST STONE, PRECAST CONCRETE PANELS, OR PAVERS BE FOUND ON THE EXISTING WALL OR FLOOR, ANCHORS SHALL BE LONG ENOUGH TO REACH THE MAIN STRUCTURE BEHIND SUCH PANELS. ANCHORAGE SHALL BE AS INDICATED ON NOTES A.1 ABOVE.

(B) TO EXISTING CONCRETE BLOCK WALL: ASTM C–90
– 1/4" ø TAPCON ANCHORS MANUFACTURED BY ITW BUILDEX INC.

NOTES:
B.1) MINIMUM EMBEDMENT OF TAPCON ANCHORS INTO CONCRETE BLOCK UNIT SHALL BE 1 1/4".

B.2) IN CASE THAT PRECAST STONE OR PRECAST CONCRETE PANELS BE FOUND ON THE EXISTING WALL, ANCHORS SHALL BE LONG ENOUGH TO REACH THE MAIN STRUCTURE BEHIND SUCH PANELS. MINIMUM EMBEDMENT SHALL BE AS INDICATED ON NOTE B.1 ABOVE.

(C) TO EXISTING WOOD FRAME BUILDING: SOUTHERN PINE #2 W/ G = 0.55 MIN.

NOTES:
–1/4"ø LAG SCREWS PER N.D.S. 2005
–1/4"ø TAPCON ANCHORS PER N.D.S. 2005

C.1) MINIMUM THREADED PENETRATION OF LAG SCREWS AND TAPCON ANCHORS, INTO THE WOOD FRAME UNIT SHALL BE 1 1/2".
NO THREADED PENETRATION INTO STUCCO SHALL BE CONSIDERED AS PART OF THE REQUIRED THREADED PENETRATION.

C.2) MINIMUM EDGE DISTANCE OF LAG SCREWS AND TAPCON ANCHORS INTO WOOD SHALL BE 2".

C.3) IN CASE THAT PRECAST STONE, PRECAST CONCRETE OR BRICK PANELS, VENEER OR PAVERS BE FOUND ON THE EXISTING WALL, ANCHORS SHALL BE LONG ENOUGH TO REACH THE MAIN SUBSTRATE BEHIND SUCH PANELS.
MINIMUM THREADED PENETRATION SHALL BE AS INDICATED ON NOTE C.1 ABOVE.

8. ANCHORS SHALL BE INSTALLED FOLLOWING ALL OF THE RECOMMENDATIONS AND SPECIFICATIONS OF THE ANCHOR'S MANUFACTURER.

9. ANCHORS REQUIRED FOR STORM BAR, HEADER & MULLION CONNECTIONS SHALL BE AS SPECIFIED ON APPLICABLE SECTIONS SHOWN ON SHEETS 6, 7, 8, 9, 10, 11, 12, 13 & 14 OF 19 RESPECTIVELY. POWER BOLT & CALK–IN ANCHORS TO BE MANUFACTURED BY POWERS FASTENERS, INC., KWIK BOLT TZ MANUFACTURERD BY HILTI INC., & TAPCON ANCHORS MANUFACTURED BY I.T.W. BUILDEX INC.

ANCHOR	SPACING	EDGE DISTANCE	MINIMUM EMBEDMENT POURED CONCRETE	MINIMUM EMBEDMENT CONCRETE BLOCK
–1/4"ø TAPCON	3"	3"	1 3/4" (Min. f'c=3192 psi)	1 1/4" (ASTM C–90)
–1/4"ø CALK–IN	2 1/2"	3"	7/8" (Min. f'c=3000 psi)	–
–3/8"ø CALK–IN	3 3/4"	4 1/2"	1 1/4" (Min. f'c=3000 psi)	–
–3/8"ø POWER BOLT	3 3/4"	4 1/2"	1 3/4" (Min. f'c=3000 psi)	1 1/4" (ASTM C–90)
–3/8"ø KWIK BOLT TZ	6"	4 3/8"	2" (Min. f'c=3000 psi)	–
–1/2"ø KWIK BOLT TZ	9 3/4"	6"	3 1/4" (Min. f'c=3000 psi)	–

10. PROTEUS® FLAME RETARDANT 18G, IS A POLYPROPYLENE MANUFACTURED BY POLY HI SOLIDUR, INC., USED AT SPRING LOADED SYSTEM FOR REMOVABLE STORM BARS & COMPLIES W/ THE FOLLOWING SPECIFICATIONS:

DESIGNATION	PROPERTIES	VALUE
ASTM D–792	DENSITY	59.51 lbs/ft³ (AVERAGE)
ASTM D–638	YIELD POINT	3200 psi (AVERAGE)
ASTM D–638	TENSILE BREAK	3250 psi (AVERAGE)
ASTM D–638	ELONGATION AT BREAK	600 % (AVERAGE)
ASTM D–790	FLEXURAL MODULUS	145000 psi (AVERAGE)
ASTM D–4020	IZOD IMPACT	0.15 ft–lbs/inch (AVERAGE)
UL 94	BURN RATING.	V–0/5–VA (AVERAGE)
ASTM E–84	FLAME SPREAD INDEX	15 °F (AVERAGE)
ASTM E–84	SMOKE DEVELOPMENT INDEX	375 °F (AVERAGE)

11. IT SHALL BE THE RESPONSIBILITY OF THE CONTRACTOR TO VERIFY THE SOUNDNESS OF THE STRUCTURE WHERE SHUTTER IS TO BE ATTACHED TO INSURE PROPER ANCHORAGE. THIS SHUTTER SHALL ONLY BE ATTACHED TO CONCRETE, BLOCK OR WOOD FRAME BUILDINGS STRICTLY FOLLOWING DETAILS INDICATED ON THIS DRAWING.

12. THE INSTALLATION CONTRACTOR IS TO SEAL/CAULK ALL SHUTTER COMPONENT EDGES WHICH REMAIN IN CONTINUOUS CONTACT WITH THE BUILDING TO PREVENT WIND/RAIN INTRUSION. CAULK AND SEAL SHUTTER TRACKS ALL AROUND FULL LENGTH.

13. ROLL–UP MECHANISM NOT PART OF THIS APPROVAL, BUT SHALL BE CERTIFIED BY AN INDEPENDENT TESTING AGENCY.

14. ROLL–UP SHUTTER INSTALLATION SHALL COMPLY WITH SPECS INDICATED IN THIS DRAWING PLUS ANY BUILDING AND ZONING REGULATIONS PROVIDED BY THE JURISDICTION WHERE PERMIT IS APPLIED TO.

15. (a) THIS P.E.D. PREPARED BY THIS ENGINEER IS GENERIC AND DOES NOT PROVIDE INFORMATION FOR A SITE SPECIFIC PROJECT; i.e. WHERE THE SITE CONDITIONS DEVIATE FROM THE P.E.D.

(b) CONTRACTOR TO BE RESPONSIBLE FOR THE SELECTION, PURCHASE AND INSTALLATION INCLUDING LIFE SAFETY OF THIS PRODUCT, BASED ON THIS P.E.D. PROVIDED HE/SHE DOES NOT DEVIATE FROM THE CONDITIONS DETAILED ON THIS DOCUMENT. CONSTRUCTION SAFETY AT SITE IS THE CONTRACTOR'S RESPONSIBILITY.

(c) THIS P.E.D. WILL BE CONSIDERED INVALID IF ALTERED BY ANY MEANS.

(d) SITE SPECIFIC PROJECTS SHALL BE PREPARED BY A PROFESSIONAL ENGINEER OR REGISTERED ARCHITECT WHICH WILL BECOME THE ENGINEER OF RECORD (E.O.R.) FOR THE PROJECT AND WHO WILL BE RESPONSIBLE FOR THE PROPER USE OF THE P.E.D.
ENGINEER OF RECORD, ACTING AS A DELEGATED ENGINEER TO THE P.E.D. ENGINEER, SHALL SUBMIT TO THIS LATTER THE SITE SPECIFIC DRAWINGS FOR REVIEW.

(e) THIS P.E.D. SHALL BEAR THE DATE AND ORIGINAL SEAL AND SIGNATURE OF THE PROFESSIONAL ENGINEER OF RECORD THAT PREPARED IT.

T.D.I. – 2006

WALTER A. TILLIT Jr. P.E.
PROFESSIONAL ENGINEER
6355 N.W. 36 STREET, STE. 305
VIRGINIA GARDENS, FL 33166
PHONE (305) 871–1530 FAX (305) 871–1531
TEXAS LIC. # 90691

60mm & 40mm ROLL–UP SHUTTER

ATLANTIC METAL EXTRUSIONS, LLC.
1243 ETRUSCAN WAY
INDIAN HARBOUR BEACH, FLORIDA 32937
PH: (859) 227–1320 FAX: (321) 777–6072

REV. NO	DESCRIPTION	DATE	REV. No	DESCRIPTION	DATE
1			3		
2			4		

DRAWN BY: F.P.
12/11/08 DATE
08–265 DRAWING No
SHEET 1 OF 19

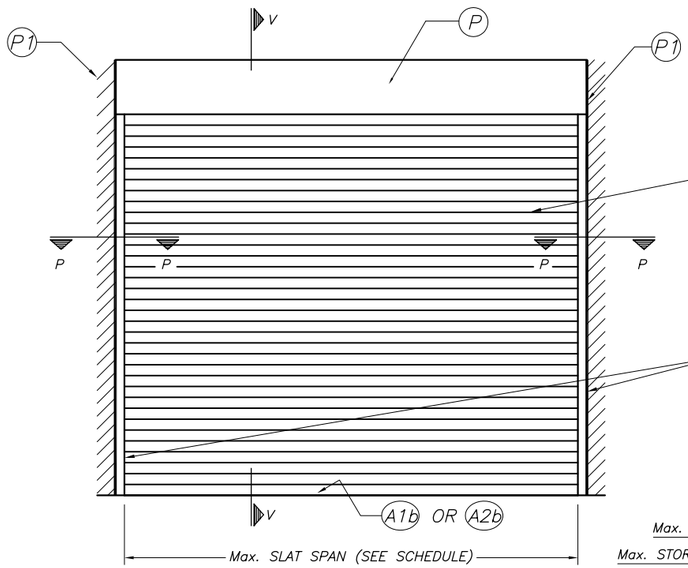

TYPICAL SINGLE UNIT ELEVATION (NO STORM BARS REQUIRED)

NOTE: SEE SHEET 3 & 5 FOR COMPONENTS NOMENCLATURE.

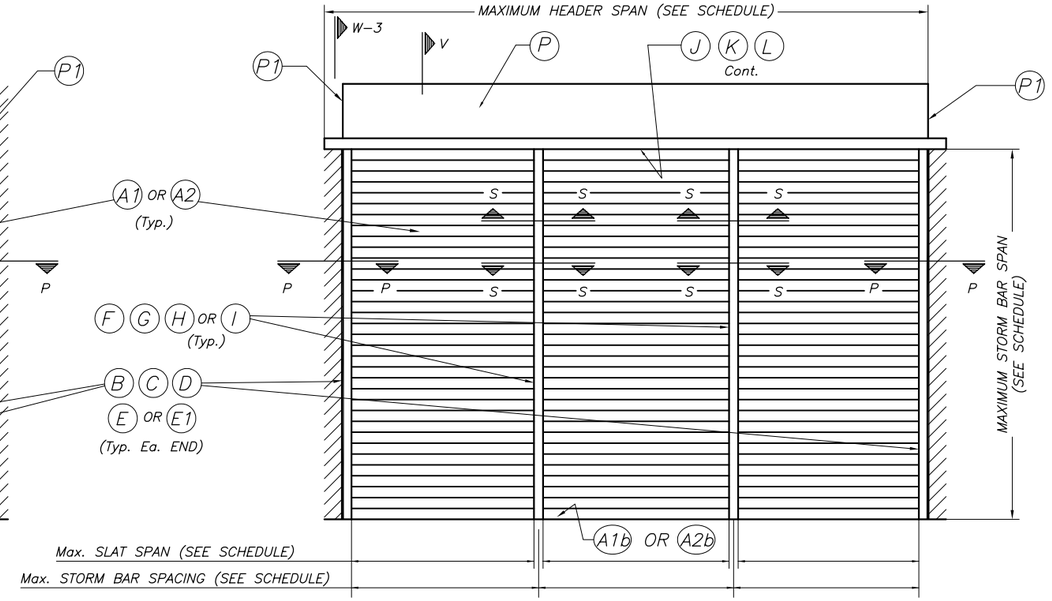

TYPICAL MULTIPLE UNIT ELEVATION (STORM BARS REQUIRED)

NOTE: SEE SHEET 3 & 5 FOR COMPONENTS NOMENCLATURE.

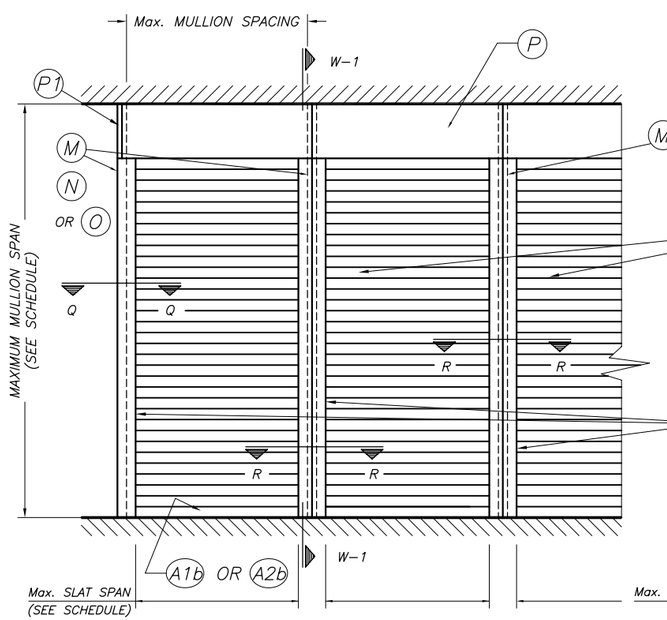

TYPICAL CONSECUTIVE SINGLE UNIT ELEVATION (NO STORM BARS REQUIRED)

NOTE: SEE SHEET 3 & 5 FOR COMPONENTS NOMENCLATURE.

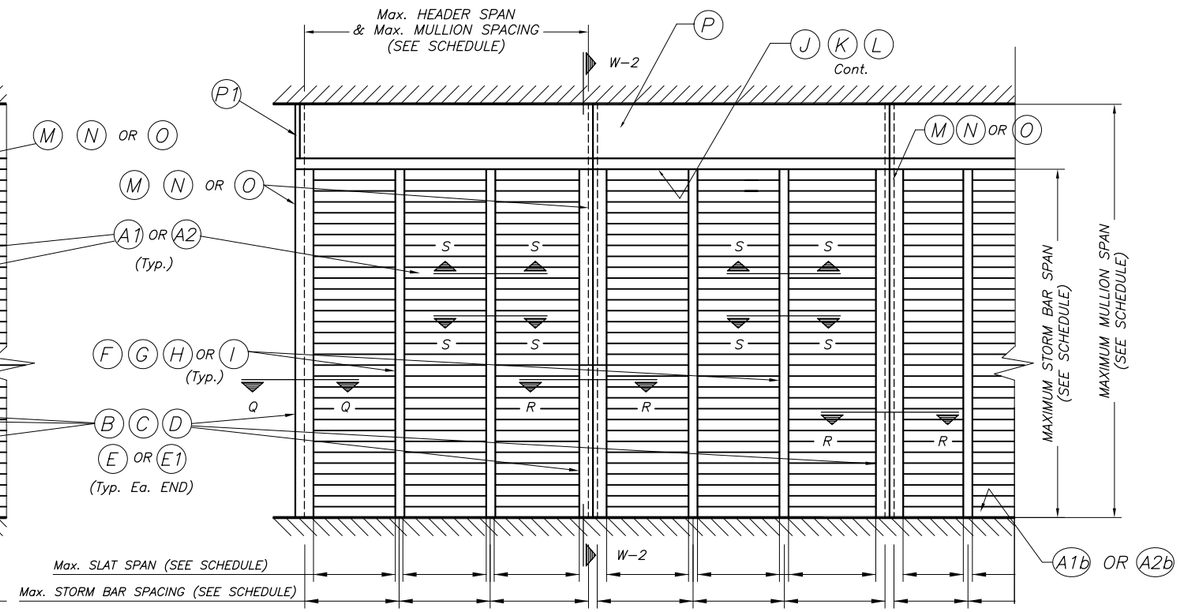

TYPICAL CONSECUTIVE MULTIPLE UNIT ELEVATION (STORM BARS REQUIRED)

NOTE: SEE SHEET 3 & 5 FOR COMPONENTS NOMENCLATURE.

T.D.I. – 2006

NOTE:
SEE SECTIONS ON
SHEETS 6 THRU 14.

WALTER A. TILLIT Jr. P.E.
PROFESSIONAL ENGINEER

6355 N.W. 36 STREET, STE. 305
VIRGINIA GARDENS, FL 33166
PHONE (305) 871-1530 FAX (305) 871-1531

TEXAS LIC. # 90691

60mm & 40mm ROLL-UP SHUTTER

ATLANTIC METAL EXTRUSIONS, LLC.
1243 ETRUSCAN WAY
INDIAN HARBOUR BEACH, FLORIDA 32937
PH: (859) 227-1320 FAX: (321) 777-6072

REV. NO	DESCRIPTION	DATE	REV. No	DESCRIPTION	DATE
1			3		
2			4		

DRAWN BY: F.P.

12/11/08
DATE

08-265
DRAWING No

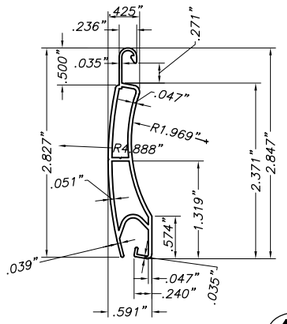

A1 TYPE 1 SLAT

60 mm EXTRUDED ALUMINUM SLAT
SCALE: 1/2" = 1"

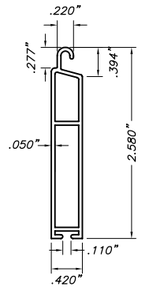

A1b BOTTOM SLAT

EXTRUDED ALUMINUM SLAT
SCALE: 1/2" = 1"

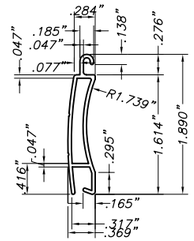

A2 TYPE 2 SLAT

40 mm EXTRUDED ALUMINUM SLAT
SCALE: 1/2" = 1"

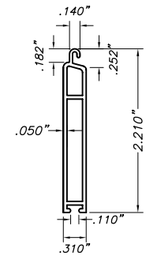

A2b BOTTOM SLAT

EXTRUDED ALUMINUM SLAT
SCALE: 1/2" = 1"

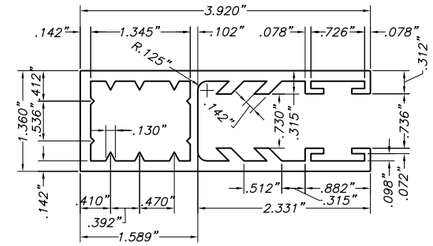

B TYPE 1 SIDE RAIL: FOR A1

EXTRUDED ALUMINUM SIDE RAIL
SCALE: 1/2" = 1"

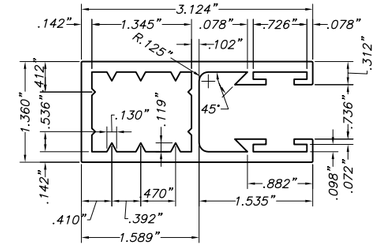

C TYPE 2 SIDE RAIL: FOR A1

EXTRUDED ALUMINUM SIDE RAIL
SCALE: 1/2" = 1"

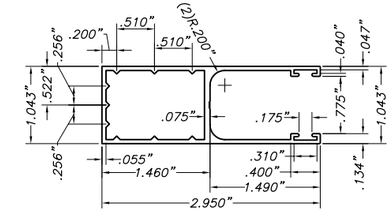

D TYPE 3 SIDE RAIL: FOR A1

EXTRUDED ALUMINUM SIDE RAIL
SCALE: 1/2" = 1"

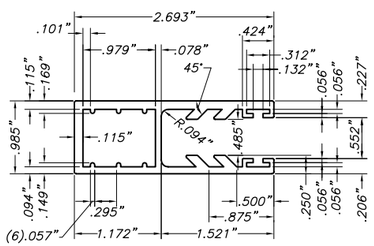

E TYPE 4 SIDE RAIL: FOR A2

EXTRUDED ALUMINUM SIDE RAIL
SCALE: 1/2" = 1"

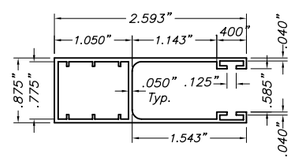

E1 TYPE 5 SIDE RAIL: FOR A2

EXTRUDED ALUMINUM SIDE RAIL
SCALE: 1/2" = 1"

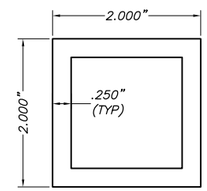

F TYPE 1 STORM BAR

2"x2" HEAVY EXTRUDED STORM BAR
SCALE: 1/2" = 1"

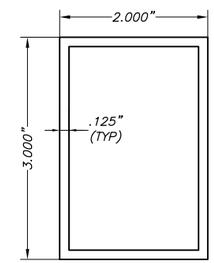

G TYPE 2 STORM BAR

3"x2" EXTRUDED STORM BAR
SCALE: 1/2" = 1"

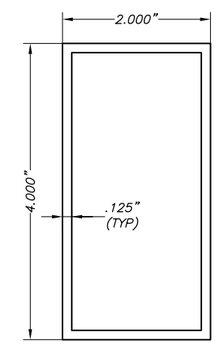

H TYPE 3 STORM BAR

4"x2" EXTRUDED STORM BAR
SCALE: 1/2" = 1"

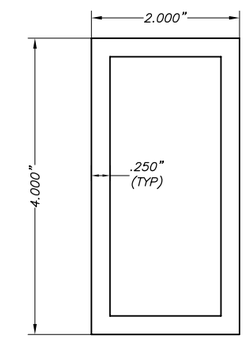

I TYPE 4 STORM BAR

4"x2" HEAVY EXTRUDED STORM BAR
SCALE: 1/2" = 1"

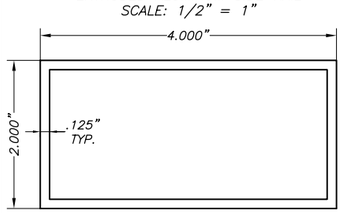

J HEADER TYPE 1

EXTRUDED HEADER
SCALE: 1/2" = 1"

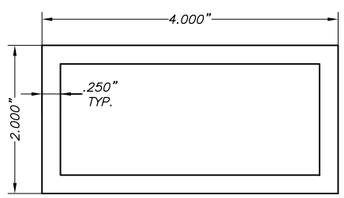

K HEADER TYPE 2

EXTRUDED HEADER
SCALE: 1/2" = 1"

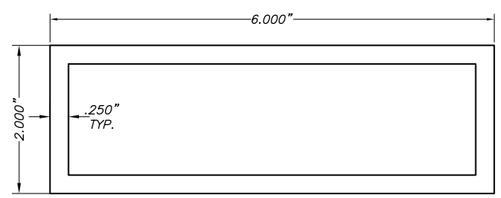

L HEADER TYPE 3:

EXTRUDED HEADER
SCALE: 1/2" = 1"

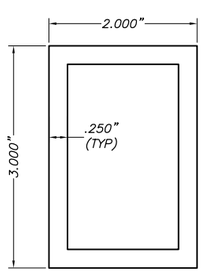

M TYPE 1 MULLION

4" EXTRUDED MULLION
SCALE: 1/2" = 1"

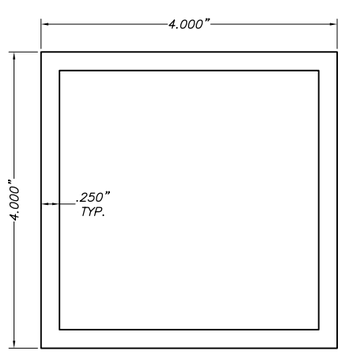

N TYPE 2 MULLION

4" EXTRUDED MULLION
SCALE: 1/2" = 1"

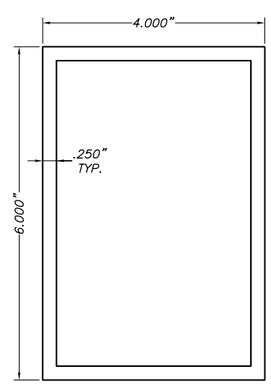

O TYPE 3 MULLION

6" EXTRUDED MULLION
SCALE: 3/8" = 1"

T.D.I. – 2006

WALTER A. TILLIT Jr. P.E.
PROFESSIONAL ENGINEER

6355 N.W. 36 STREET, STE. 305
VIRGINIA GARDENS, FL 33166
PHONE (305) 871–1530 FAX (305) 871–1531

TEXAS LIC. # 90691

60mm & 40mm ROLL–UP SHUTTER

ATLANTIC METAL EXTRUSIONS, LLC.
1243 ETRUSCAN WAY
INDIAN HARBOUR BEACH, FLORIDA 32937
PH: (859) 227–1320 FAX: (321) 777–6072

REV. NO	DESCRIPTION	DATE	REV. No	DESCRIPTION	DATE
1			3		
2			4		

DRAWN BY: F.P.

12/11/08
DATE

08–265
DRAWING No

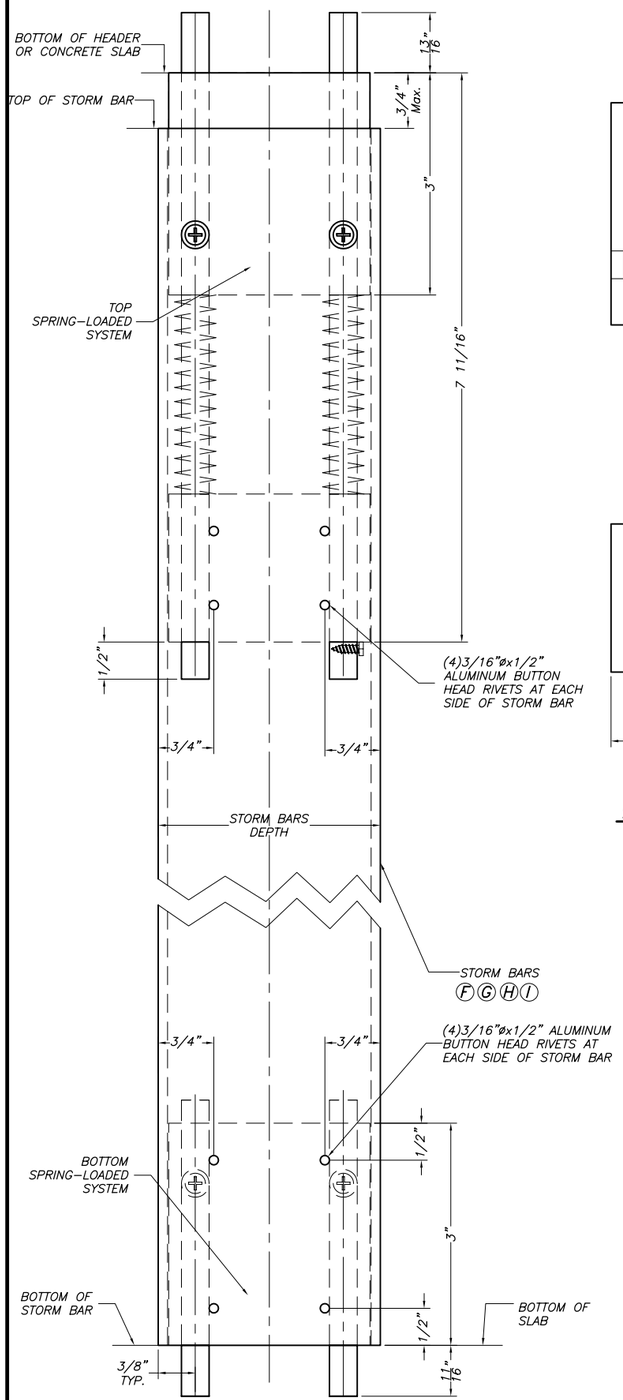

TYPICAL CONNECTION TO STORM BARS (SIDE VIEW)

SCALE: 1/2" = 1"

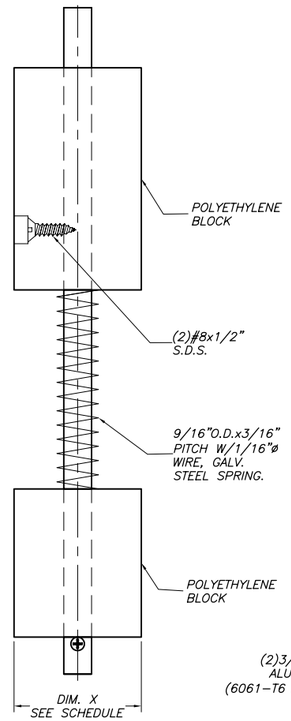

FRONT

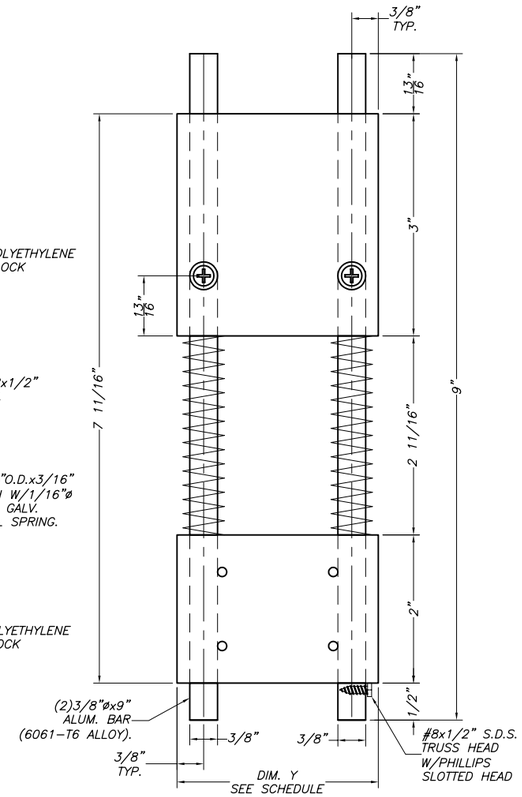

SIDE VIEW

TOP SPRING-LOADED SYSTEM

SCALE: 1/2" = 1"

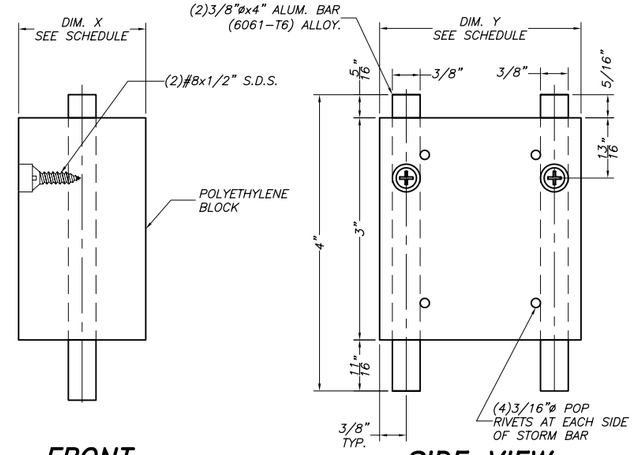

FRONT

SIDE VIEW

BOTTOM SPRING-LOADED SYSTEM

SCALE: 1/2" = 1"

X, Y DIMENSIONS FOR A GIVEN TYPE OF STORM BAR		
STORM BAR TYPE	X(in)	Y(in)
F	1 19/32"	1 19/32"
G	1 23/32"	2 23/32"
H	1 23/32"	3 23/32"
I	1 15/32"	3 15/32"

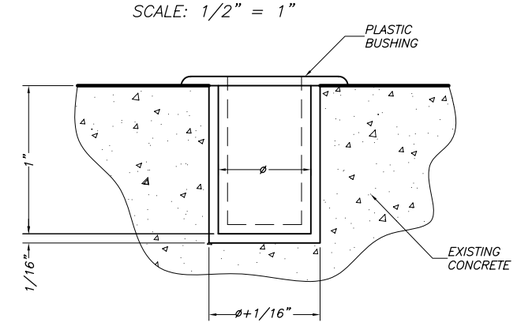

ENGAGEMENT HOLE DETAIL (IN CONCRETE) FOR REMOVABLE SPRING-LOADED STORM BARS

SCALE: 1" = 1"

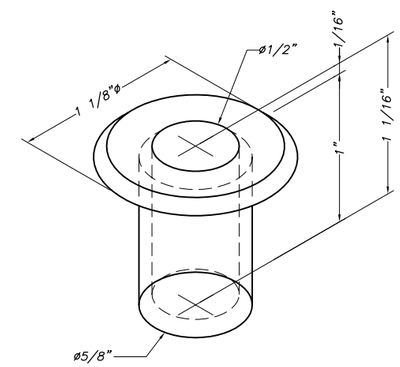

PLASTIC BUSHING: DETAIL 1 (ISOMETRIC)

SCALE: 1" = 1"

NOTES:

(1) ENGAGEMENT HOLE DRILLED IN CONCRETE SHALL BE 5/8"ø x 1" DEEP, W/1/16" Max. TOLERANCE IN BOTH DIAMETER & DEPTH.

(2) ENGAGEMENT HOLE DRILLED IN CONCRETE SHALL BE PERMANENTLY PROTECTED BY FITTING PLASTIC BUSHING (SEE DETAIL 1) INTO HOLE. IT SHALL BE THE RESPONSIBILITY OF SHUTTER'S OWNER TO PERMANENTLY KEEP BUSHING FREE OF DUST & MOLD BY REMOVING IT FROM ENGAGEMENT HOLE, CLEANING IT AND REPOSITIONING IT INTO HOLE AS INDICATED ON ABOVE DETAIL.

TYPICAL SPRING-LOADED SYSTEM FOR REMOVABLE STORM BARS AS ALTERNATE TO THE USE OF CALK-IN ANCHORS

T.D.I. – 2006

WALTER A. TILLIT Jr. P.E.
PROFESSIONAL ENGINEER

6355 N.W. 36 STREET, STE. 305
VIRGINIA GARDENS, FL 33166
PHONE (305) 871-1530 FAX (305) 871-1531

TEXAS LIC. # 90691

60mm & 40mm ROLL-UP SHUTTER

ATLANTIC METAL EXTRUSIONS, LLC.
1243 ETRUSCAN WAY
INDIAN HARBOUR BEACH, FLORIDA 32937
PH: (859) 227-1320 FAX: (321) 777-6072

REV. NO	DESCRIPTION	DATE	REV. No	DESCRIPTION	DATE
1			3		
2			4		

DRAWN BY: F.P.

12/11/08 DATE

08-265 DRAWING No

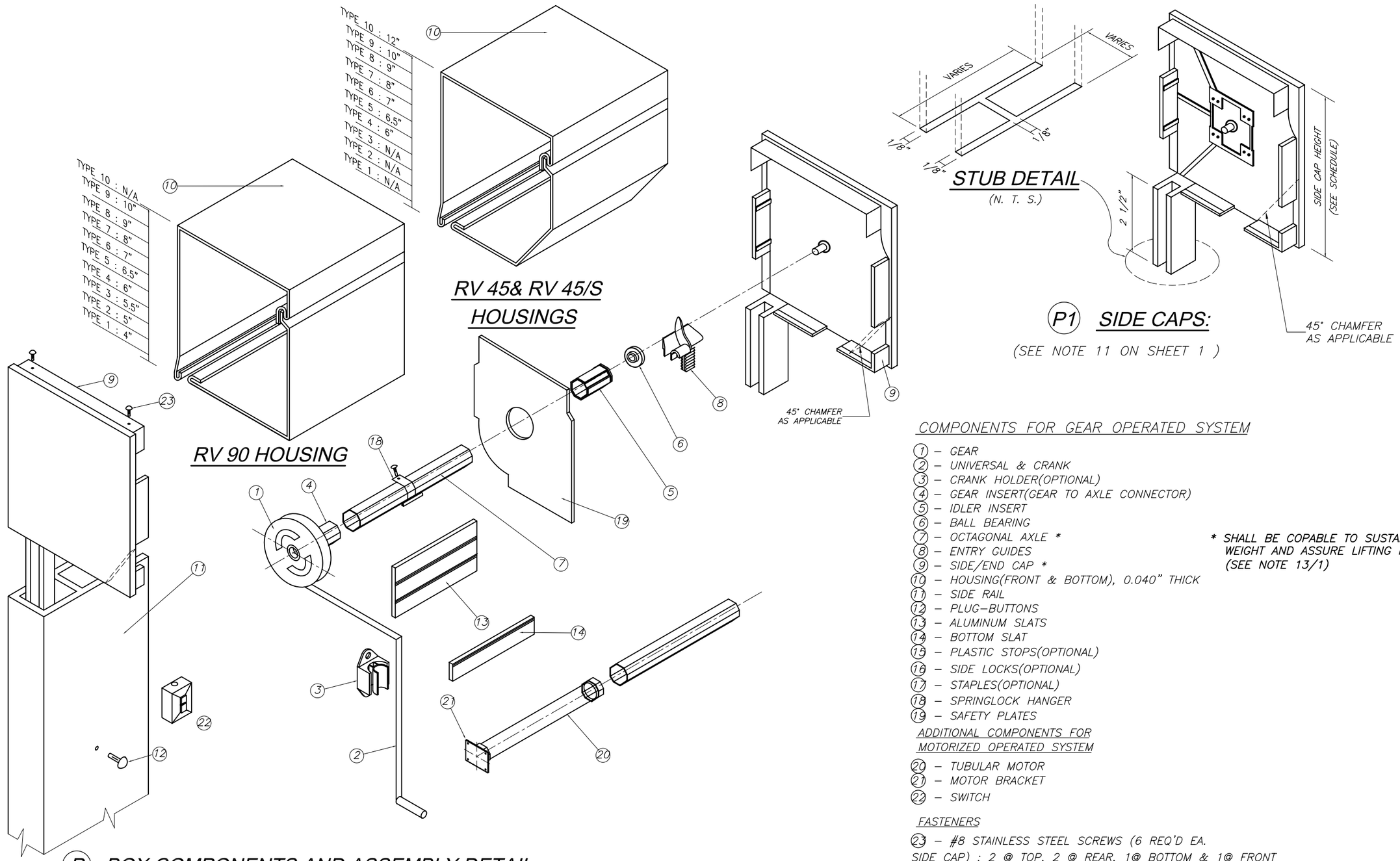

COMPONENTS FOR GEAR OPERATED SYSTEM

1 – GEAR
2 – UNIVERSAL & CRANK
3 – CRANK HOLDER(OPTIONAL)
4 – GEAR INSERT(GEAR TO AXLE CONNECTOR)
5 – IDLER INSERT
6 – BALL BEARING
7 – OCTAGONAL AXLE *
8 – ENTRY GUIDES
9 – SIDE/END CAP *
10 – HOUSING(FRONT & BOTTOM), 0.040" THICK
11 – SIDE RAIL
12 – PLUG–BUTTONS
13 – ALUMINUM SLATS
14 – BOTTOM SLAT
15 – PLASTIC STOPS(OPTIONAL)
16 – SIDE LOCKS(OPTIONAL)
17 – STAPLES(OPTIONAL)
18 – SPRINGLOCK HANGER
19 – SAFETY PLATES

ADDITIONAL COMPONENTS FOR MOTORIZED OPERATED SYSTEM

20 – TUBULAR MOTOR
21 – MOTOR BRACKET
22 – SWITCH

FASTENERS

23 – #8 STAINLESS STEEL SCREWS (6 REQ'D EA. SIDE CAP) : 2 @ TOP, 2 @ REAR, 1@ BOTTOM & 1@ FRONT

* SHALL BE COPABLE TO SUSTAIN SLAT'S WEIGHT AND ASSURE LIFTING MECHANISM (SEE NOTE 13/1)

T.D.I. – 2006

WALTER A. TILLIT Jr. P.E.
PROFESSIONAL ENGINEER
6355 N.W. 36 STREET, STE. 305
VIRGINIA GARDENS, FL 33166
PHONE (305) 871–1530 FAX (305) 871–1531
TEXAS LIC. # 90691

60mm & 40mm ROLL–UP SHUTTER

ATLANTIC METAL EXTRUSIONS, LLC.
1243 ETRUSCAN WAY
INDIAN HARBOUR BEACH, FLORIDA 32937
PH: (859) 227–1320 FAX: (321) 777–6072

REV. NO	DESCRIPTION	DATE	REV. No	DESCRIPTION	DATE
1			3		
2			4		

DRAWN BY: F.P.
12/11/08 DATE
08–265 DRAWING No
SHEET 5 OF 19

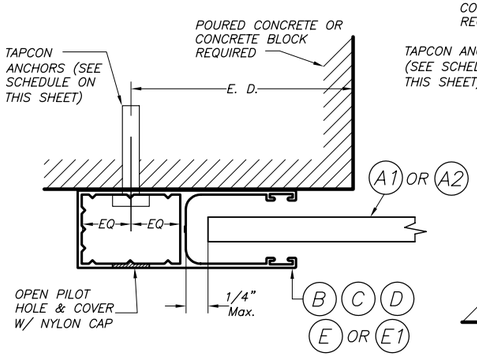

SECTION P – P (1) :
WALL MOUNT
SCALE: 1/2" = 1"

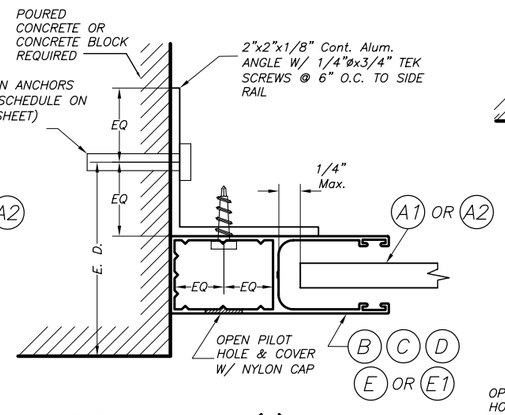

SECTION P – P (2) :
INSIDE MOUNT
SCALE: 1/2" = 1"

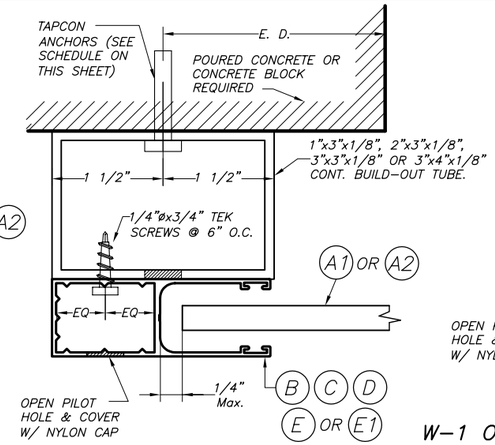

SECTION P – P (3) :
BUILD-OUT MOUNT
SCALE: 1/2" = 1"

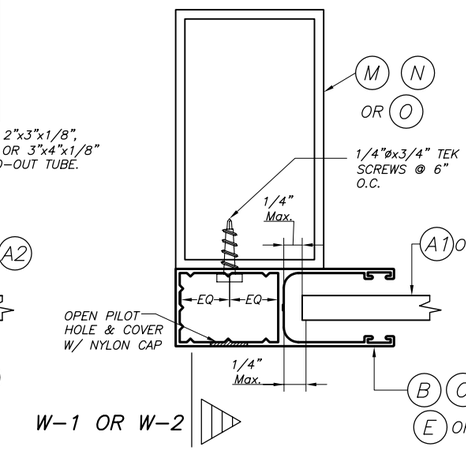

SECTION Q – Q :
MULLION MOUNT
(FACE MOUNT)
SCALE: 1/2" = 1"

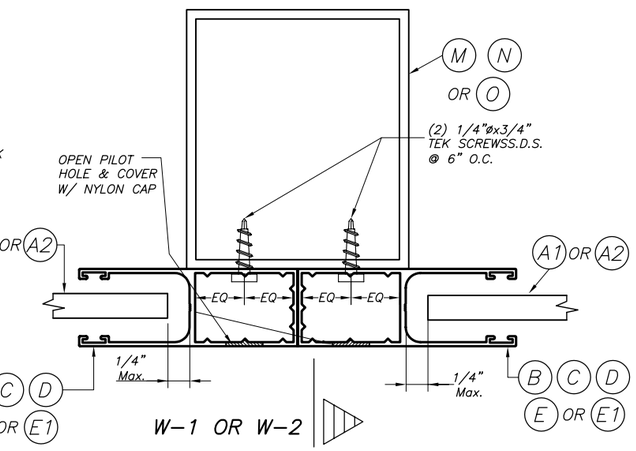

SECTION R – R :
MULLION MOUNT
(FACE MOUNT)
SCALE: 1/2" = 1"

SIDE RAIL ANCHOR SCHEDULE
MAXIMUM DESIGN PRESSURE RATING "W" (p.s.f.) AND CORRESPONDING MAXIMUM ANCHOR SPACING(in) * FOR SIDE RAILS B, C, D, E & E1 CONNECTION TO POURED CONCRETE OR MASONRY WALL

(USE MAXIMUM VALUES BETWEEN POSITIVE AND NEGATIVE LOADS)

CONCRETE BLOCK
POURED CONCRETE

SUBSTRATE LEGEND

MAXIMUM DESIGN LOAD "W" (p.s.f.)	SIDE RAIL B			SIDE RAIL C			SIDE RAIL D			SIDE RAIL E			SIDE RAIL E1		
	WALL MOUNT	INSIDE MOUNT	BUILD-OUT MOUNT	WALL MOUNT	INSIDE MOUNT	BUILD-OUT MOUNT	WALL MOUNT	INSIDE MOUNT	BUILD-OUT MOUNT	WALL MOUNT	INSIDE MOUNT	BUILD-OUT MOUNT	WALL MOUNT	INSIDE MOUNT	BUILD-OUT MOUNT
45 OR LESS	9"	4"	8 1/2"	9"	5"	9"	9"	6"	9"	9"	6"	6"	9"	6"	6"
	9"	6"	9"	9"	6"	9"	9"	6"	9"	9"	6"	6"	9"	6"	6"
>45 TO 60	9"	3 1/2"	6 1/2"	9"	4 1/2"	9"	7"	4 1/2"	9"	9"	6"	6"	9"	6"	6"
	9"	6"	9"	9"	6"	9"	9"	6"	9"	9"	6"	6"	9"	6"	6"
>60 TO 100	8 1/2"	N/A	5"	9"	3"	6 1/2"	4 1/2"	3 1/2"	7"	9"	4 1/2"	6"	6 1/2"	5 1/2	6"
	9"	6"	9"	9"	6"	9"	9"	6"	9"	9"	6"	6"	9"	6"	6"
>100 TO 160	6 1/2"	N/A	4"	7"	N/A	4 1/2"	N/A"	N/A"	5"	9"	3 1/2"	6"	4"	4"	6"
	9"	4 1/2"	9"	9"	5 1/2"	9"	5 1/2"	4"	9"	9"	6"	6"	9"	6"	6"

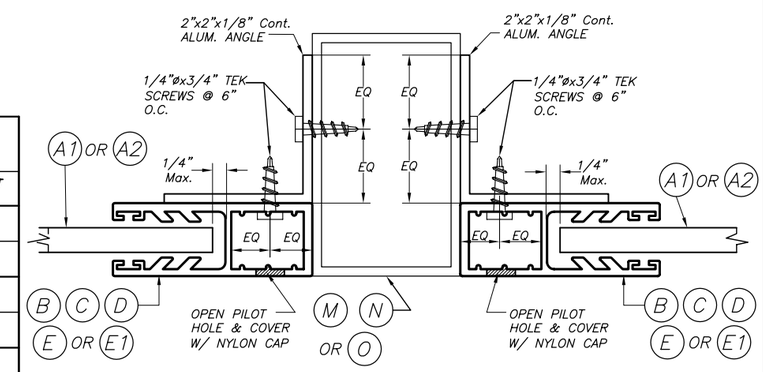

SECTION R – R :
MULLION MOUNT
(INSIDE MOUNT)
SCALE: 1/2" = 1"

* MAXIMUM ANCHOR SPACING (in.) AT SIDE RAILS VERSUS EDGE DISTANCE = E.D.

MAXIMUM ANCHOR SPACINGS ARE VALID FOR 3" EDGE DISTANCE. FOR E. D. LESS THAN 3", REDUCE ANCHOR SPACING BY MULTIPLYING SPACING SHOWN ON SCHEDULE BY THE FOLLOWING FACTORS (IN ORDER FOR THIS OPERATION TO BE MADE REDUCED SPACING OBTAINED USING FACTORS SHALL NOT BE LESS THAN 3"):

ACTUAL E. D.	FACTOR
1 1/2"	0.35

T.D.I. – 2006

WALTER A. TILLIT Jr. P.E.
PROFESSIONAL ENGINEER
6355 N.W. 36 STREET, STE. 305
VIRGINIA GARDENS, FL 33166
PHONE (305) 871-1530 FAX (305) 871-1531
TEXAS LIC. # 90691

60mm & 40mm ROLL-UP SHUTTER

ATLANTIC METAL EXTRUSIONS, LLC.
1243 ETRUSCAN WAY
INDIAN HARBOUR BEACH, FLORIDA 32937
PH: (859) 227-1320 FAX: (321) 777-6072

REV. NO	DESCRIPTION	DATE	REV. No	DESCRIPTION	DATE
1			3		
2			4		

DRAWN BY: F.P.
12/11/08 DATE
08-265 DRAWING No

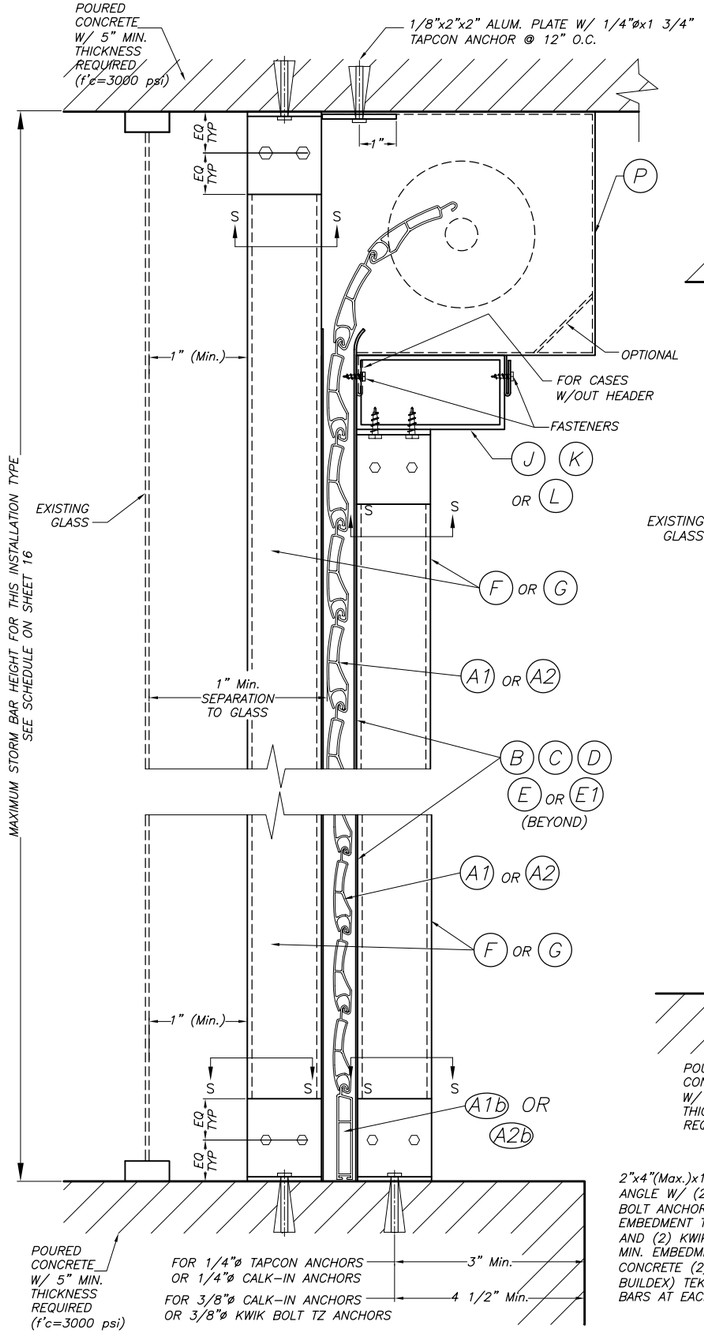

CEILING & FLOOR MOUNTING SECTION V-V(2) INSTALLATION W/ FIXED OR REMOVABLE STORM BARS W/ CONCRETE ANCHORS

(SEE SECTION "S" FOR ANCHOR TYPE REQUIREMENT)

SCALE : 1/4" = 1"

SINGLE SPAN SECTIONS AND DETAILS ARE SIMILAR TO ABOVE SHOWN WITHOUT STORM BAR & HEADERS.

SECTION V – V

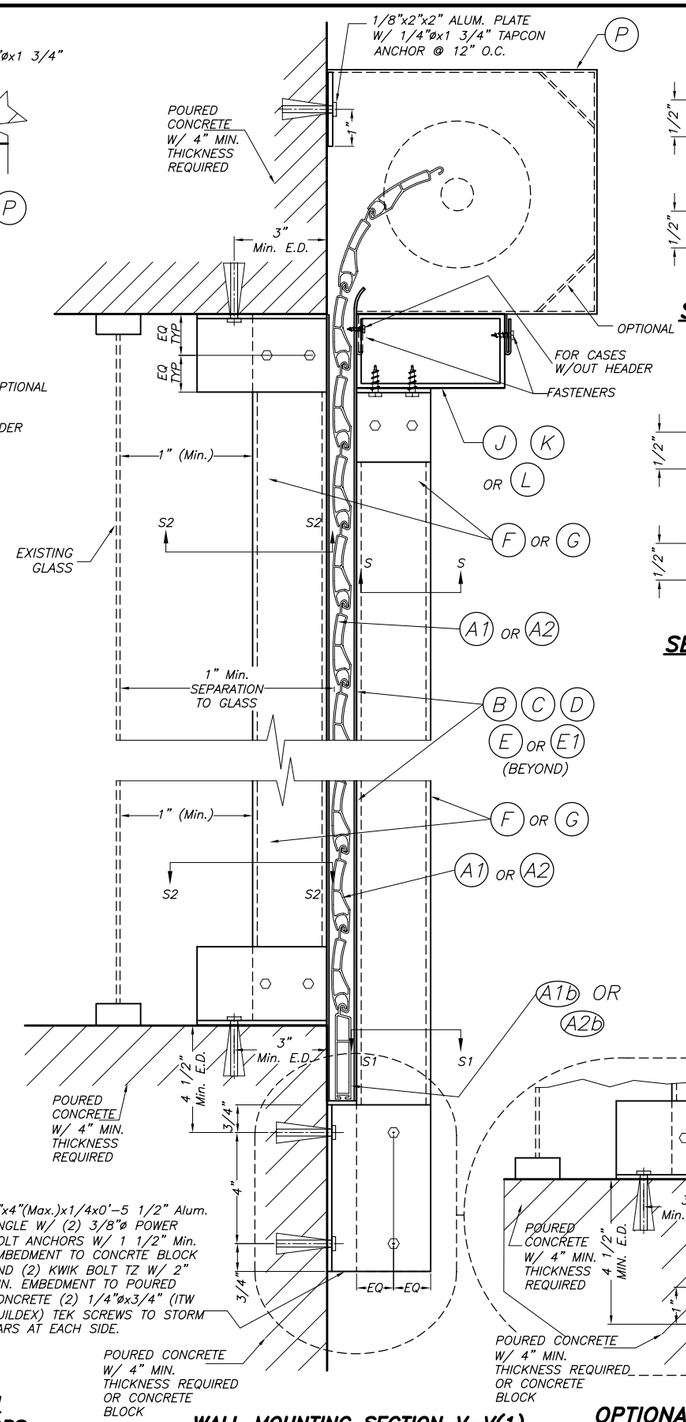

WALL MOUNTING SECTION V-V(1) INSTALLATION W/ FIXED STORM BARS W/ CONCRETE ANCHORS

SCALE : 1/4" = 1"

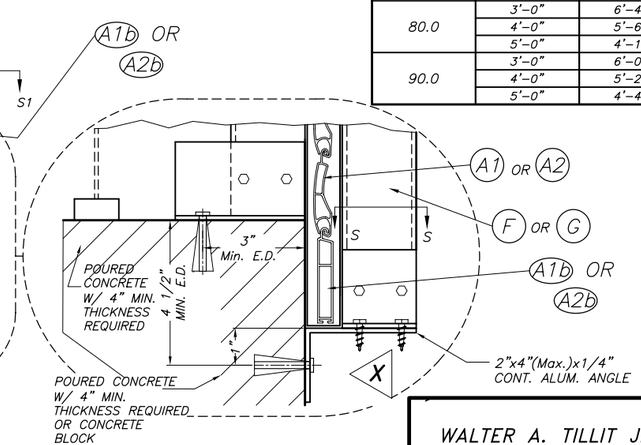

OPTIONAL STORM BAR CONNECTION

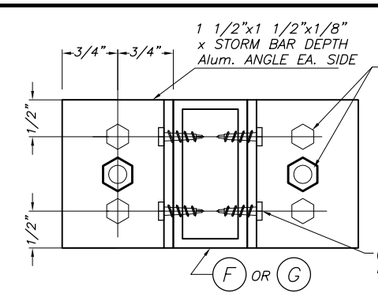

SECTION S – S (FOR FIXED STORM BAR)

SCALE : 1/2" = 1"

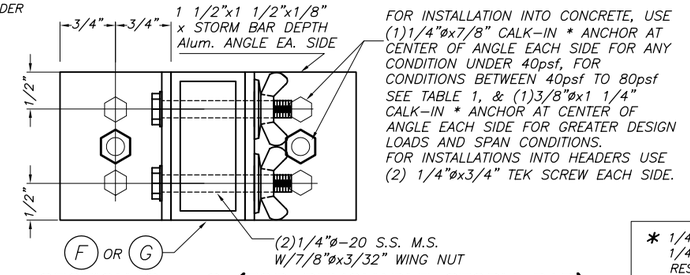

SECTION S – S (FOR REMOVABLE STORM BAR)

SCALE : 1/2" = 1"

TABLE1

DESIGN LOAD "W" (p.s.f.)	Max. SLAT SPAN	"L" Max. STORM BAR HEIGHT
45.0	3'-0"	8'-0"
	4'-0"	7'-4"
	5'-0"	6'-7"
50.0	3'-0"	8'-0"
	4'-0"	6'-11"
	5'-0"	6'-3"
60.0	3'-0"	7'-4"
	4'-0"	6'-4"
	5'-0"	5'-8"
70.0	3'-0"	6'-9"
	4'-0"	5'-11"
	5'-0"	5'-3"
80.0	3'-0"	6'-4"
	4'-0"	5'-6"
	5'-0"	4'-11"
90.0	3'-0"	6'-0"
	4'-0"	5'-2"
	5'-0"	4'-4"

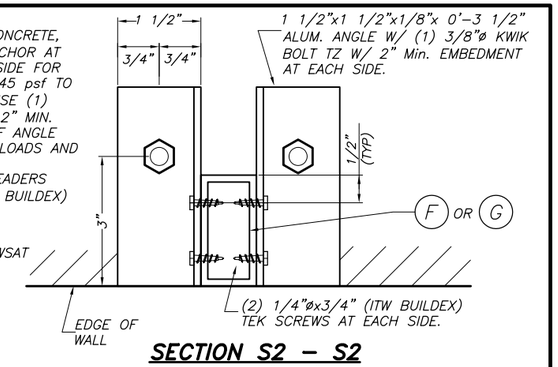

SECTION S2 – S2

SCALE : 1/4" = 1"

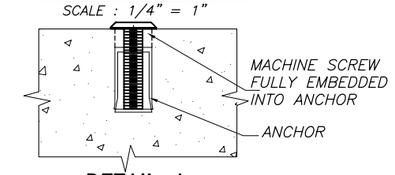

DETAIL A

SCALE : 1/2" = 1"

* 1/4"ø-20 OR 3/8"ø-16 MACHINE SCREWS USED JOINTLY W/ 1/4"øx7/8" OR 3/8"øx1 1/4" CALK-IN ANCHORS RESPECTIVELY SHALL BE LEFT TOGETHER W/ ANCHORS AT THE TIME STORM BARS ARE REMOVED. (SEE DET. A).

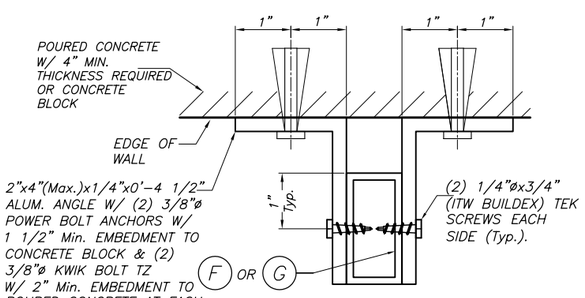

SECTION S1 - S1

SCALE : N. T. S.

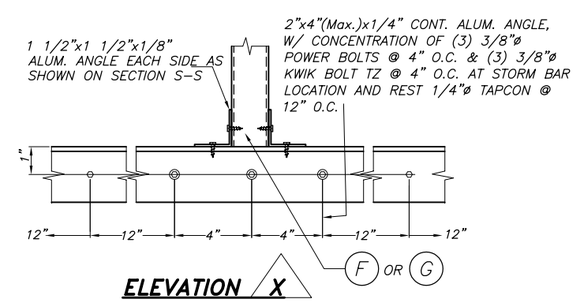

ELEVATION X

SCALE : N. T. S.

T.D.I. – 2006

WALTER A. TILLIT Jr. P.E.
PROFESSIONAL ENGINEER
6355 N.W. 36 STREET, STE. 305
VIRGINIA GARDENS, FL 33166
PHONE (305) 871-1530 FAX (305) 871-1531
TEXAS LIC. # 90691

60mm & 40mm ROLL-UP SHUTTER

ATLANTIC METAL EXTRUSIONS, LLC.

1243 ETRUSCAN WAY
INDIAN HARBOUR BEACH, FLORIDA 32937
PH: (859) 227-1320 FAX: (321) 777-6072

REV. NO	DESCRIPTION	DATE	REV. No	DESCRIPTION	DATE
1			3		
2			4		

DRAWN BY: F.P.

12/11/08 DATE

08-265 DRAWING No

SHEET 7 OF 19

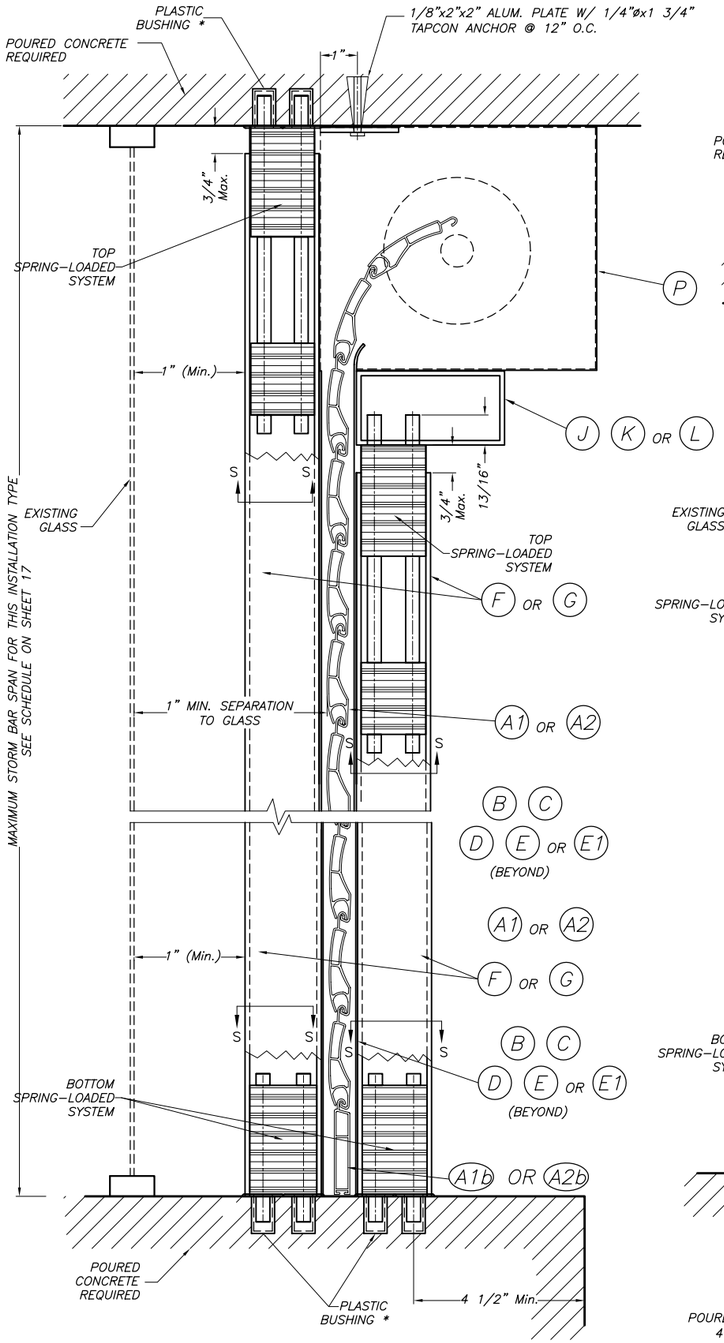

CEILING & FLOOR MOUNTING INSTALLATION W/ REMOVABLE STORM BARS W/SPRING-LOADED SYSTEM *

SCALE : 1/4" = 1"

SECTION V – V (3)

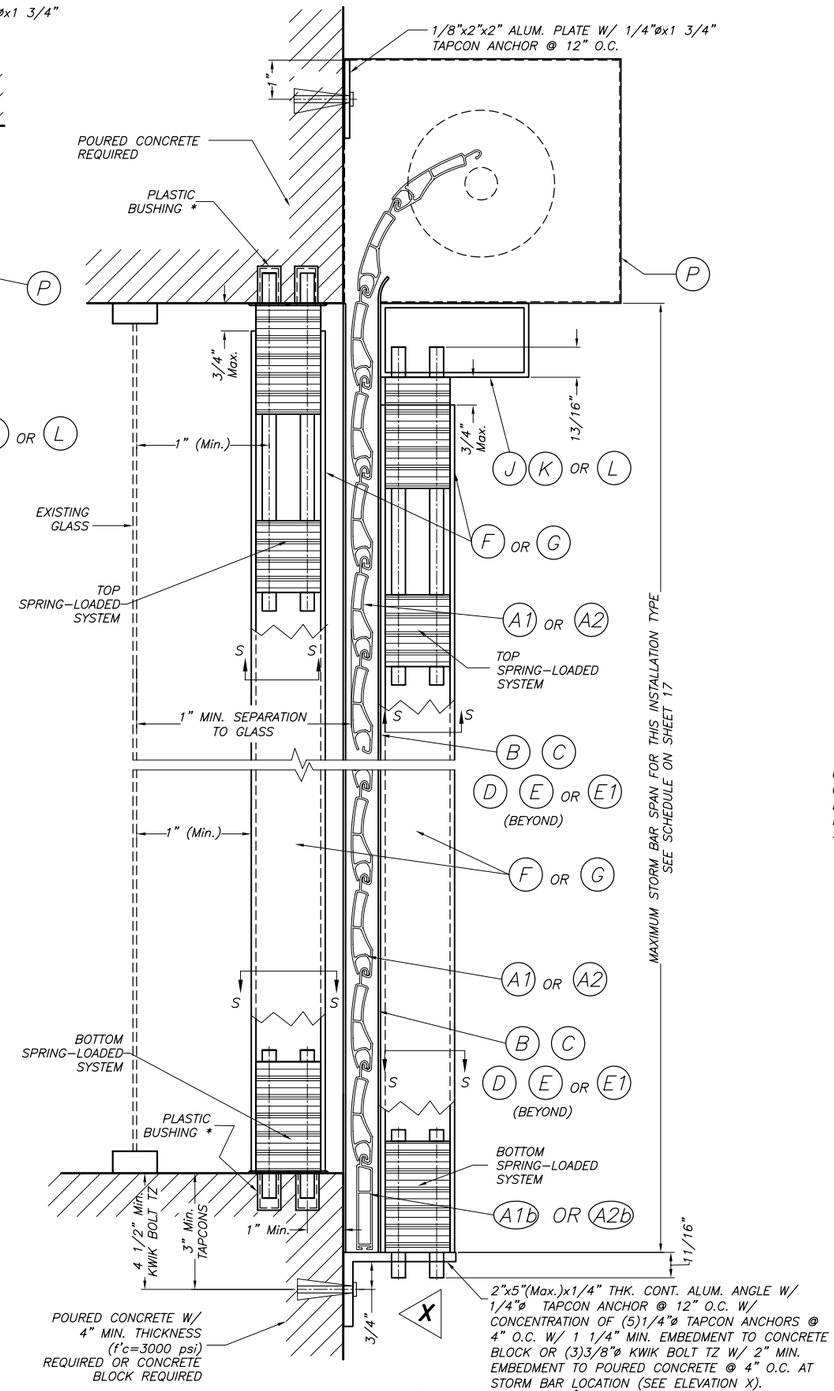

WALL MOUNTING INSTALLATION W/ REMOVABLE STORM BARS W/SPRING-LOADED SYSTEM *

SCALE : 1/4" = 1"

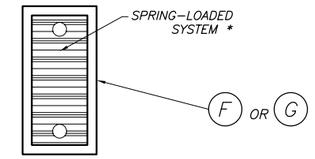

SECTION S – S :

SCALE : 1/2" = 1"

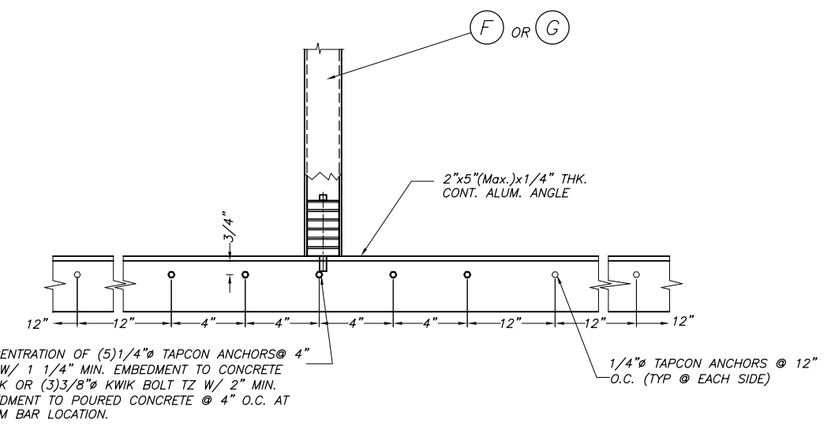

ELEVATION X

SCALE : 1/8" = 1"

* SEE SHEET 4 OF 19 FOR SPECS. & DETAILS.

T.D.I. – 2006

WALTER A. TILLIT Jr. P.E.
PROFESSIONAL ENGINEER

6355 N.W. 36 STREET, STE. 305
VIRGINIA GARDENS, FL 33166
PHONE (305) 871-1530 FAX (305) 871-1531

TEXAS LIC. # 90691

60mm & 40mm ROLL-UP SHUTTER

ATLANTIC METAL EXTRUSIONS, LLC.
1243 ETRUSCAN WAY
INDIAN HARBOUR BEACH, FLORIDA 32937
PH: (859) 227-1320 FAX: (321) 777-6072

REV. NO	DESCRIPTION	DATE	REV. No	DESCRIPTION	DATE
1			3		
2			4		

DRAWN BY: F.P.

12/11/08 DATE

08-265 DRAWING No

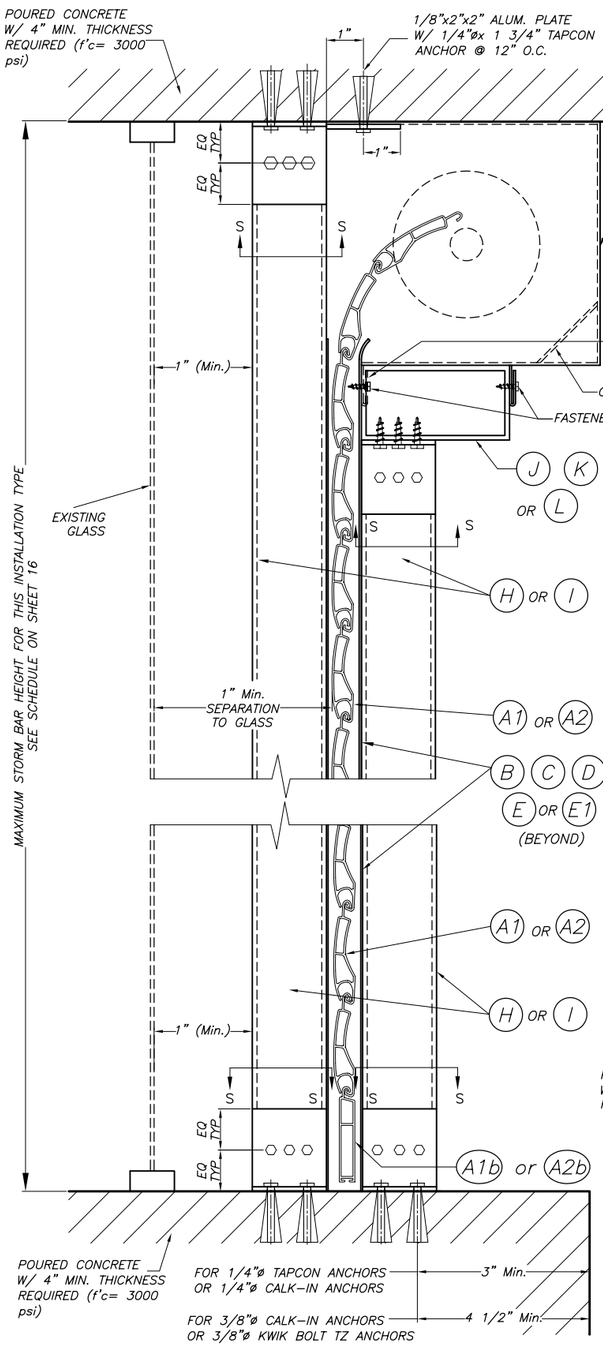

CEILING & FLOOR MOUNTING SECTION V-V(2) INSTALLATION W/ FIXED OR REMOVABLE STORM BARS W/ CONCRETE ANCHORS

(SEE SECTION "S" FOR ANCHOR TYPE REQUIREMENT)

SCALE : N.T.S.

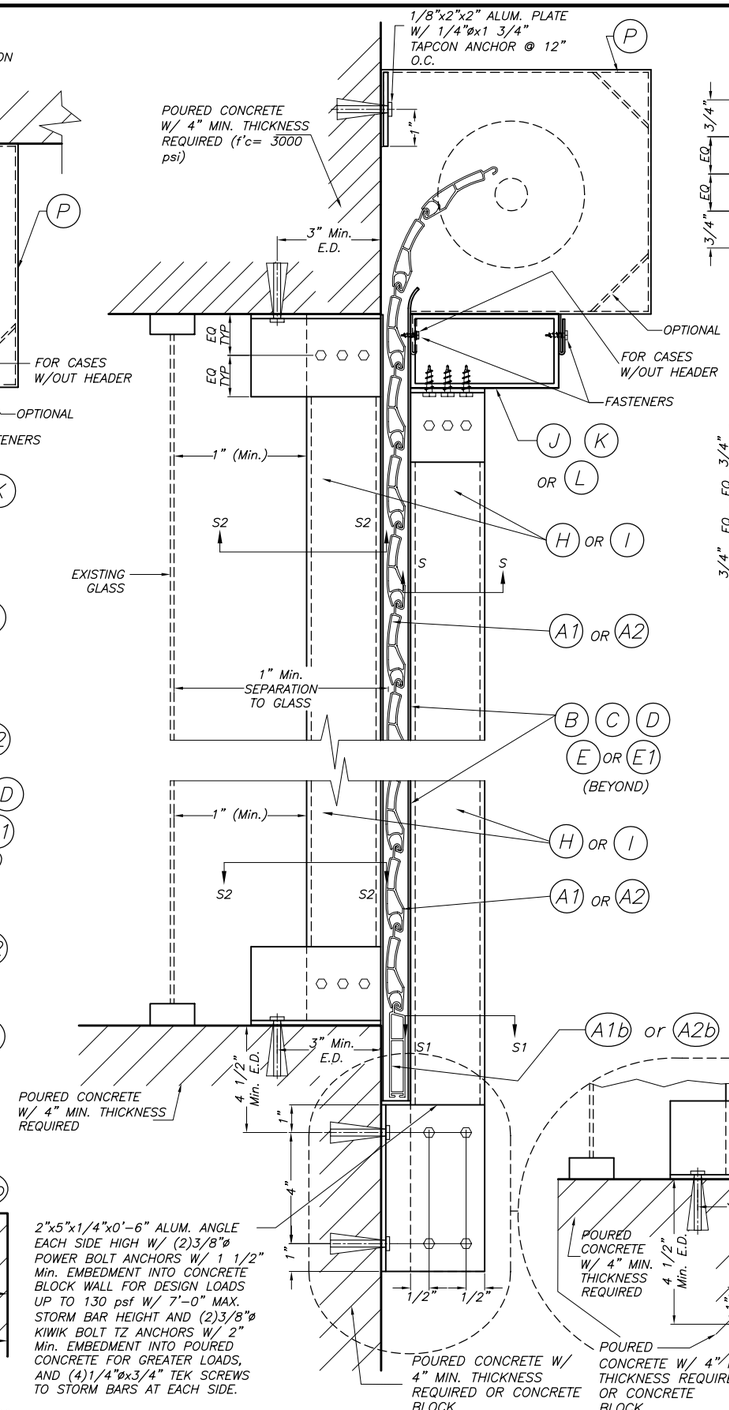

WALL MOUNTING SECTION V-V(1) INSTALLATION W/ FIXEDSTORM BARS W/ CONCRETE ANCHORS

SCALE : N.T.S.

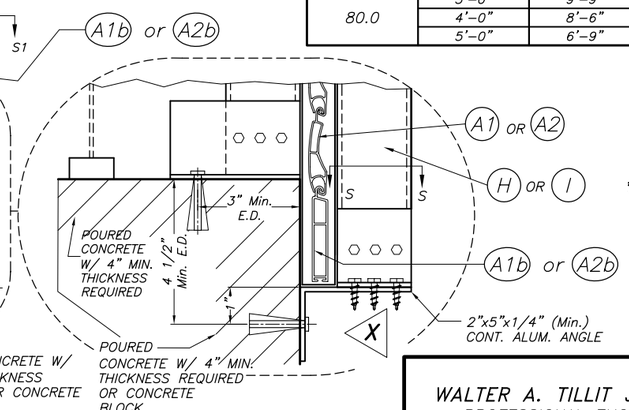

OPTIONAL STORM BAR CONNECTION

SECTION V - V

SINGLE SPAN SECTIONS AND DETAILS ARE SIMILAR TO ABOVE SHOWN WITHOUT STORM BAR & HEADERS.

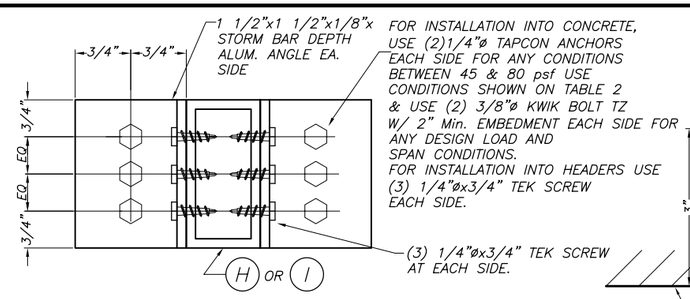

SECTION S - S (FOR FIXED STORM BAR)

SCALE : N.T.S.

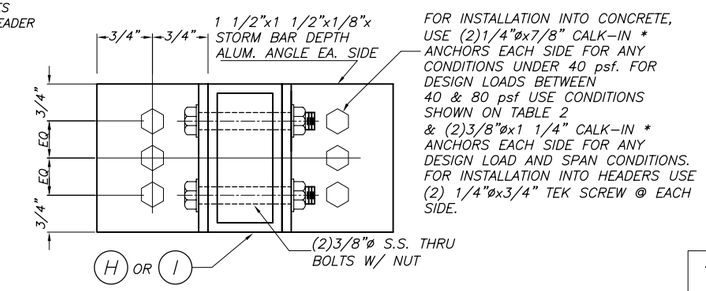

SECTION S - S (FOR REMOVABLE STORM BAR)

SCALE : N.T.S.

TABLE 2

DESIGN LOAD "W" (p.s.f.)	MAX. SLAT SPAN	"L" MAX. STORM BAR HEIGHT
45.0	3'-0"	11'-5"
	4'-0"	10'-8"
	5'-0"	10'-1"
50.0	3'-0"	11'-2"
	4'-0"	10'-5"
	5'-0"	9'-10"
60.0	3'-0"	10'-8"
	4'-0"	9'-11"
	5'-0"	9'-2"
70.0	3'-0"	10'-4"
	4'-0"	9'-6"
	5'-0"	7'-9"
80.0	3'-0"	9'-9"
	4'-0"	8'-6"
	5'-0"	6'-9"

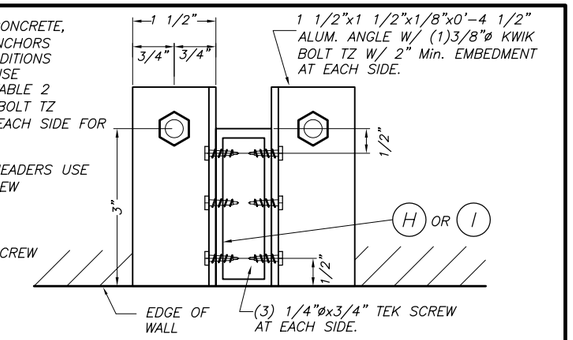

SECTION S2 - S2

SCALE : N.T.S.

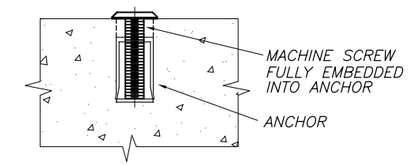

DETAIL A

SCALE : 1/2" = 1"

* 1/4"ø-20 OR 3/8"ø-16 MACHINE SCREWS USED JOINTLY W/ 1/4"øx7/8" OR 3/8"øx1 1/4" CALK-IN ANCHORS RESPECTIVELY SHALL BE LEFT TOGETHER W/ ANCHORS AT THE TIME STORM BARS ARE REMOVED. (SEE DET. A).

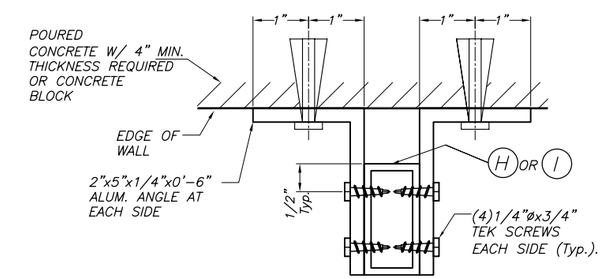

SECTION S1-S1

SCALE : N.T.S.

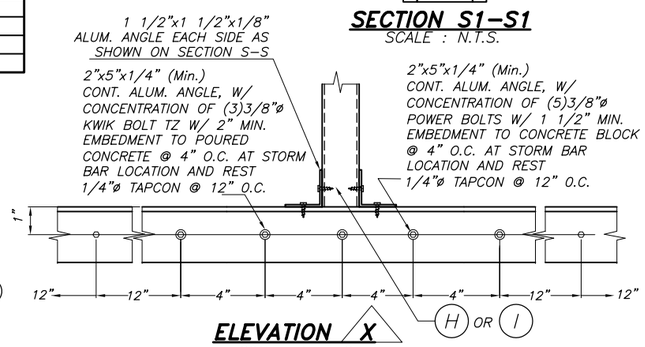

ELEVATION X

SCALE : N. T. S.

T.D.I. - 2006

WALTER A. TILLIT Jr. P.E.
PROFESSIONAL ENGINEER

6355 N.W. 36 STREET, STE. 305
VIRGINIA GARDENS, FL 33166
PHONE (305) 871-1530 FAX (305) 871-1531

TEXAS LIC. # 90691

60mm & 40mm ROLL-UP SHUTTER

ATLANTIC METAL EXTRUSIONS, LLC.

1243 ETRUSCAN WAY
INDIAN HARBOUR BEACH, FLORIDA 32937
PH: (859) 227-1320 FAX: (321) 777-6072

REV. NO	DESCRIPTION	DATE	REV. No	DESCRIPTION	DATE
1			3		
2			4		

DRAWN BY: F.P.

12/11/08 DATE

08-265 DRAWING No

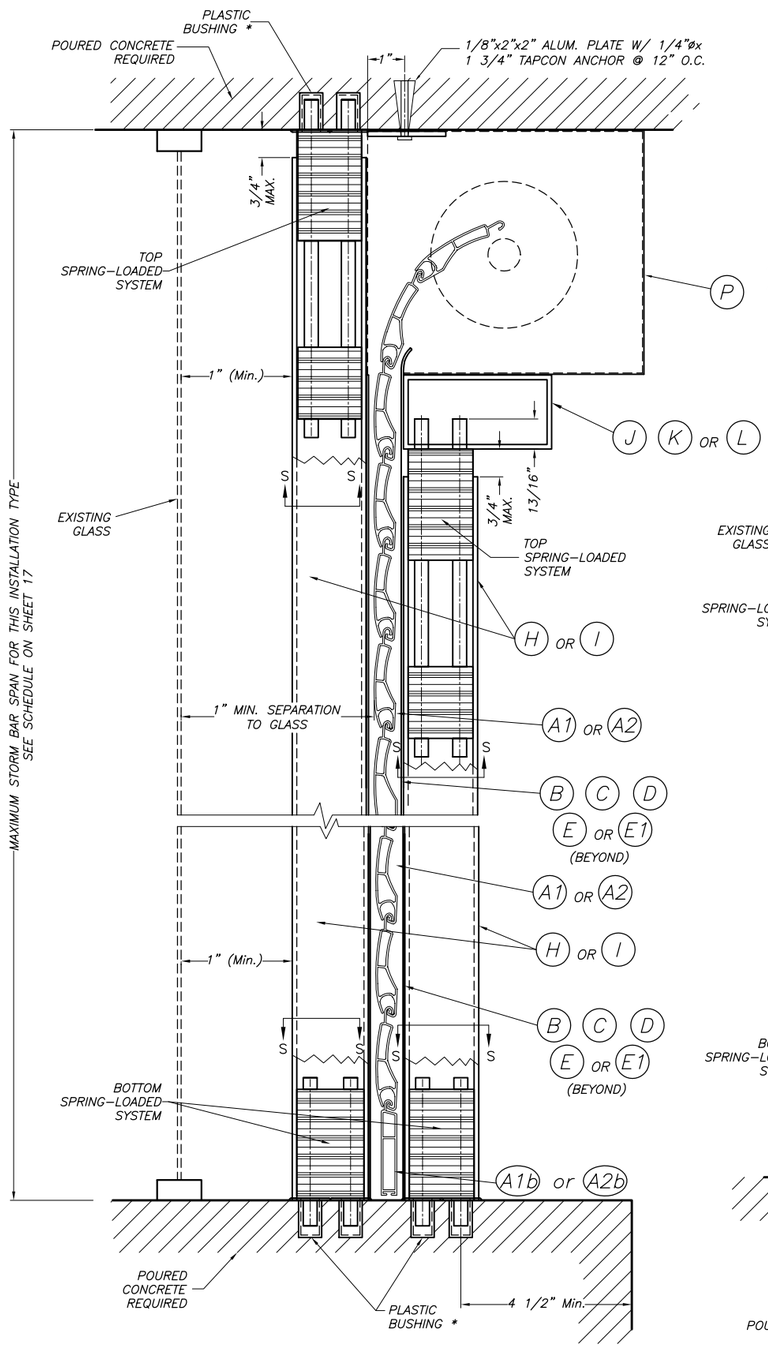

CEILING & FLOOR MOUNTING INSTALLATION W/ REMOVABLE STORM BARS W/SPRING-LOADED SYSTEM *

SCALE : 1/4" = 1"

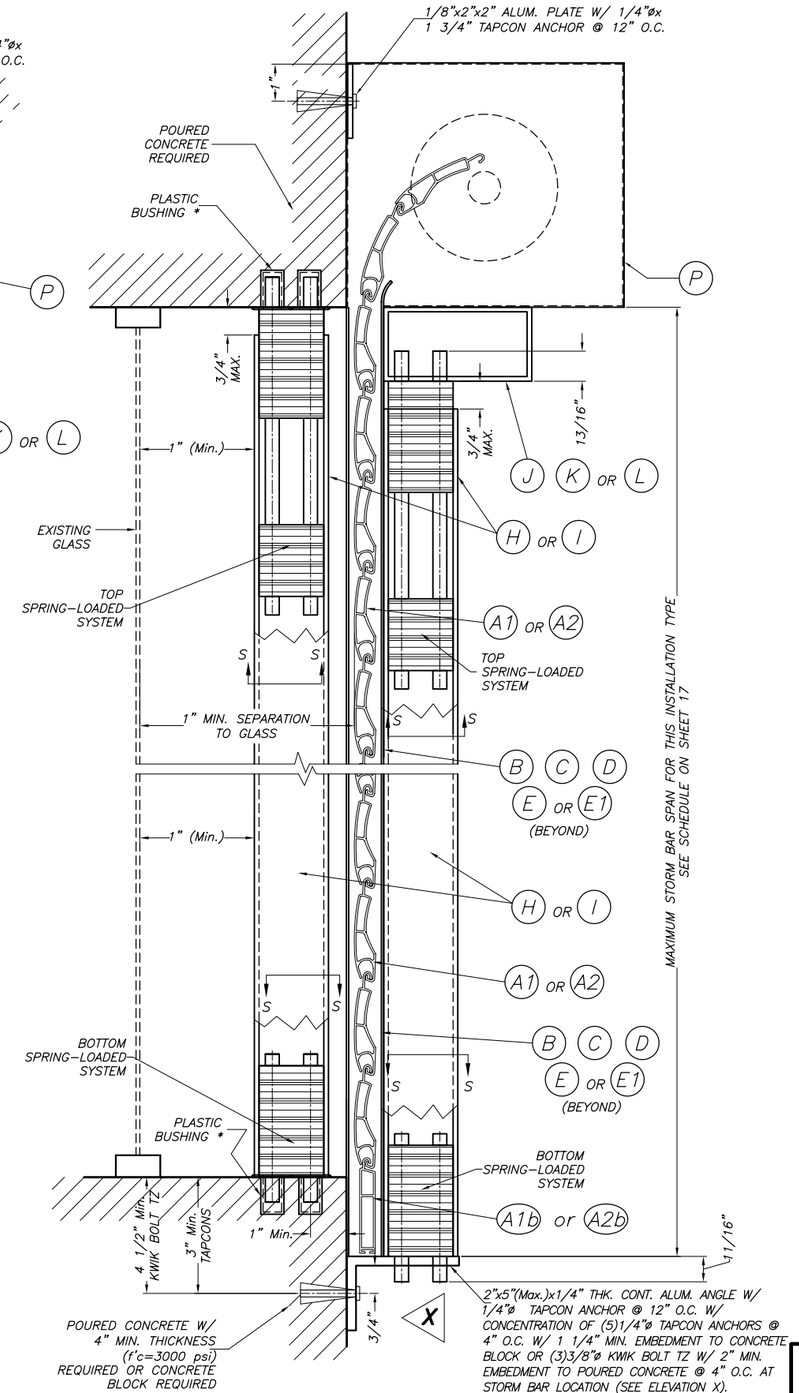

WALL MOUNTING INSTALLATION W/ REMOVABLE STORM BARS W/SPRING-LOADED SYSTEM *

SCALE : 1/4" = 1"

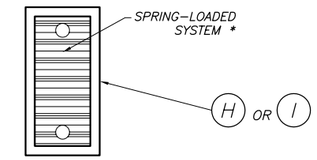

SECTION S – S :
SINGLE STORM BAR

SCALE : 1/2" = 1"

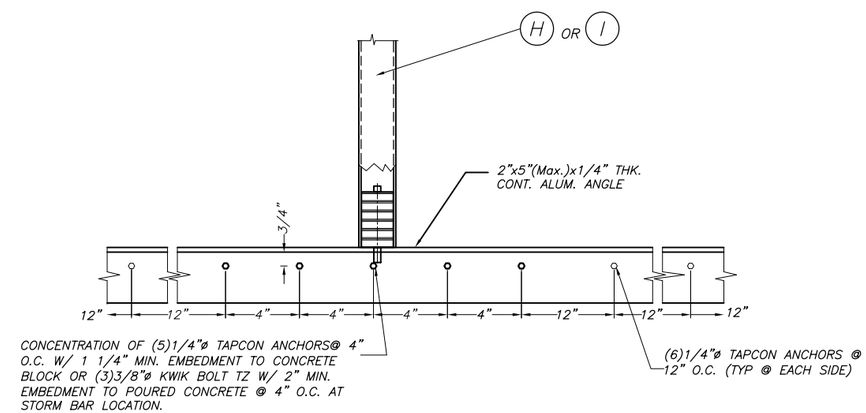

ELEVATION X

SCALE : 1/8" = 1"

T.D.I. – 2006

* SEE SHEET 4 OF 19 FOR SPECS. & DETAILS.

SECTIONS V – V (3)

WALTER A. TILLIT Jr. P.E.
PROFESSIONAL ENGINEER
6355 N.W. 36 STREET, STE. 305
VIRGINIA GARDENS, FL 33166
PHONE (305) 871-1530 FAX (305) 871-1531
TEXAS LIC. # 90691

60mm & 40mm ROLL-UP SHUTTER

ATLANTIC METAL EXTRUSIONS, LLC.
1243 ETRUSCAN WAY
INDIAN HARBOUR BEACH, FLORIDA 32937
PH: (859) 227-1320 FAX: (321) 777-6072

REV. NO	DESCRIPTION	DATE	REV. No	DESCRIPTION	DATE
1			3		
2			4		

DRAWN BY: F.P.
12/11/08 DATE
08-265 DRAWING No
SHEET 10 OF 19

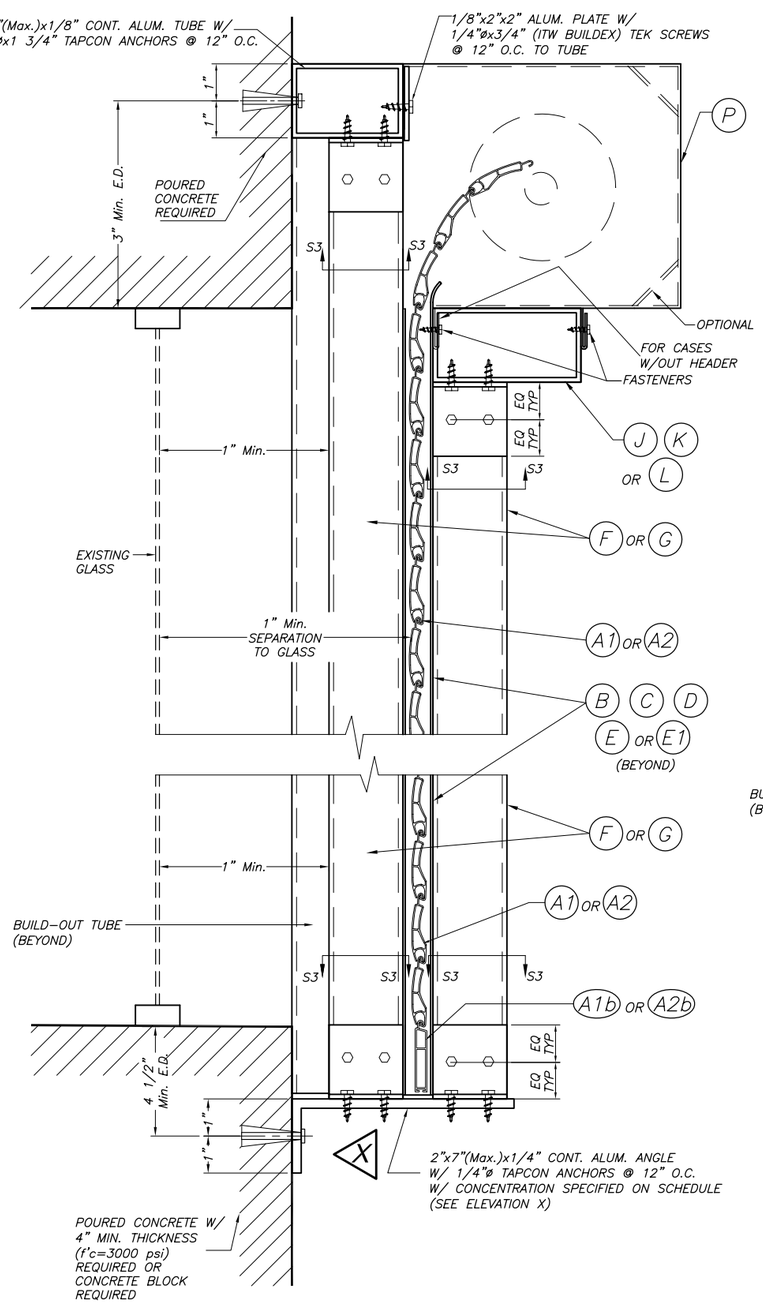

CASE I

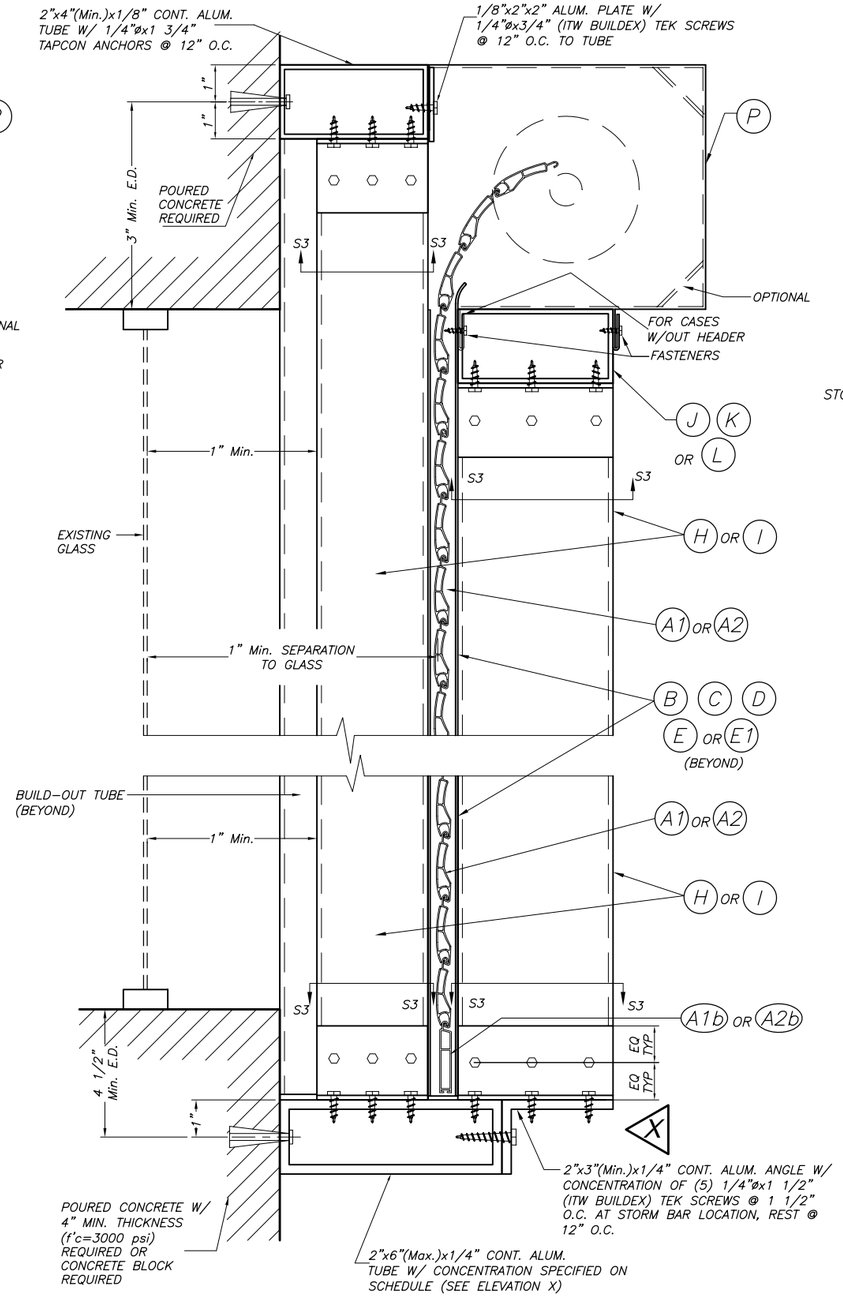

CASE II

FIXED STORM BAR CONNECTION AT BUILD-OUT INSTALLATIONS W/ SHEET METAL SCREWS OR MACHINE SCREWS

SCALE : 1/4" = 1"

NOTE:
SINGLE SPAN SECTIONS AND DETAILS ARE SIMILAR TO ABOVE SHOWN WITHOUT STORM BAR & HEADERS.

SECTION V – V (3)

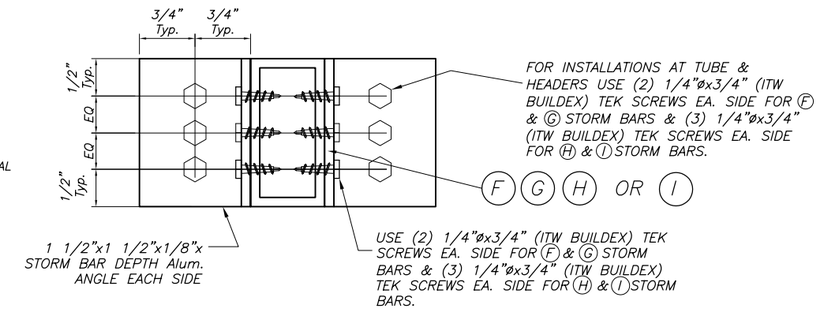

SECTION S3–S3

SCALE : 1/2" = 1"

ANCHORS & STORM BARS SCHEDULE FOR ELEVATION. X			
CASES	SUBSTRATE	ANCHOR TYPE	STORM BAR TYPE
CASE 1	BLOCK	(3) 3/8"ø POWER BOLT	F, G
	CONCRETE	(1) 3/8"ø KWIK BOLT TZ	
CASE 2	BLOCK	(3) 3/8"ø POWER BOLT	H, I
	CONCRETE	(1) 3/8"ø KWIK BOLT TZ	

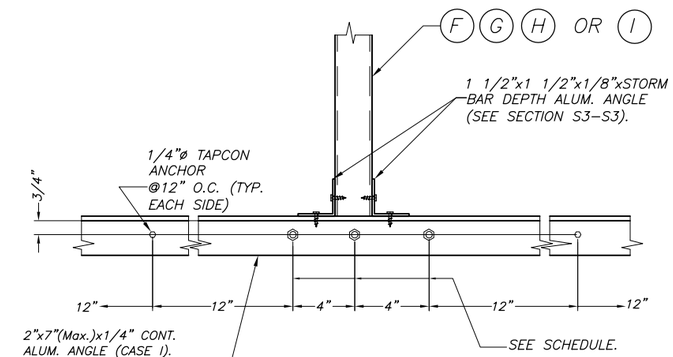

ELEVATION X

SCALE : 1/8" = 1"

T.D.I. – 2006

WALTER A. TILLIT Jr. P.E.
PROFESSIONAL ENGINEER
6355 N.W. 36 STREET, STE. 305
VIRGINIA GARDENS, FL 33166
PHONE (305) 871-1530 FAX (305) 871-1531
TEXAS LIC. # 90691

60mm & 40mm ROLL-UP SHUTTER

ATLANTIC METAL EXTRUSIONS, LLC.
1243 ETRUSCAN WAY
INDIAN HARBOUR BEACH, FLORIDA 32937
PH: (859) 227-1320 FAX: (321) 777-6072

REV. NO	DESCRIPTION	DATE	REV. No	DESCRIPTION	DATE
1			3		
2			4		

DRAWN BY: F.P.
12/11/08 DATE
08-265 DRAWING No
SHEET 11 OF 19

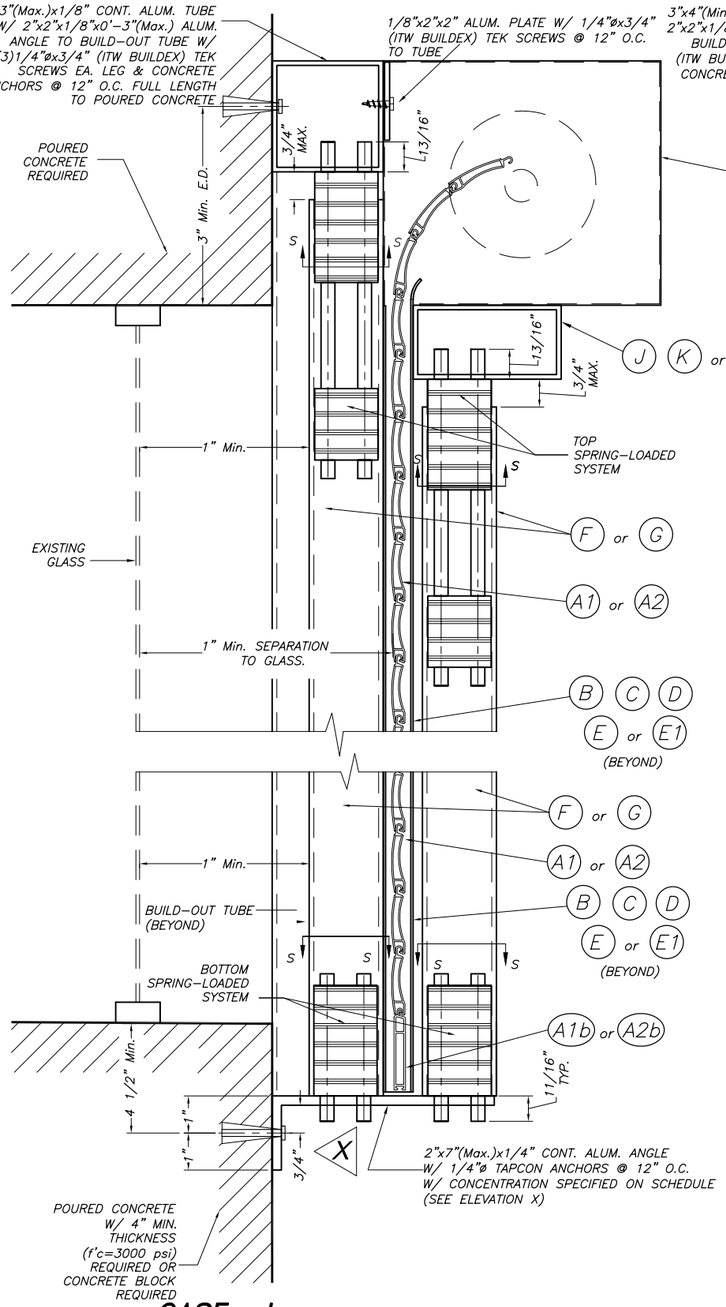

CASE I

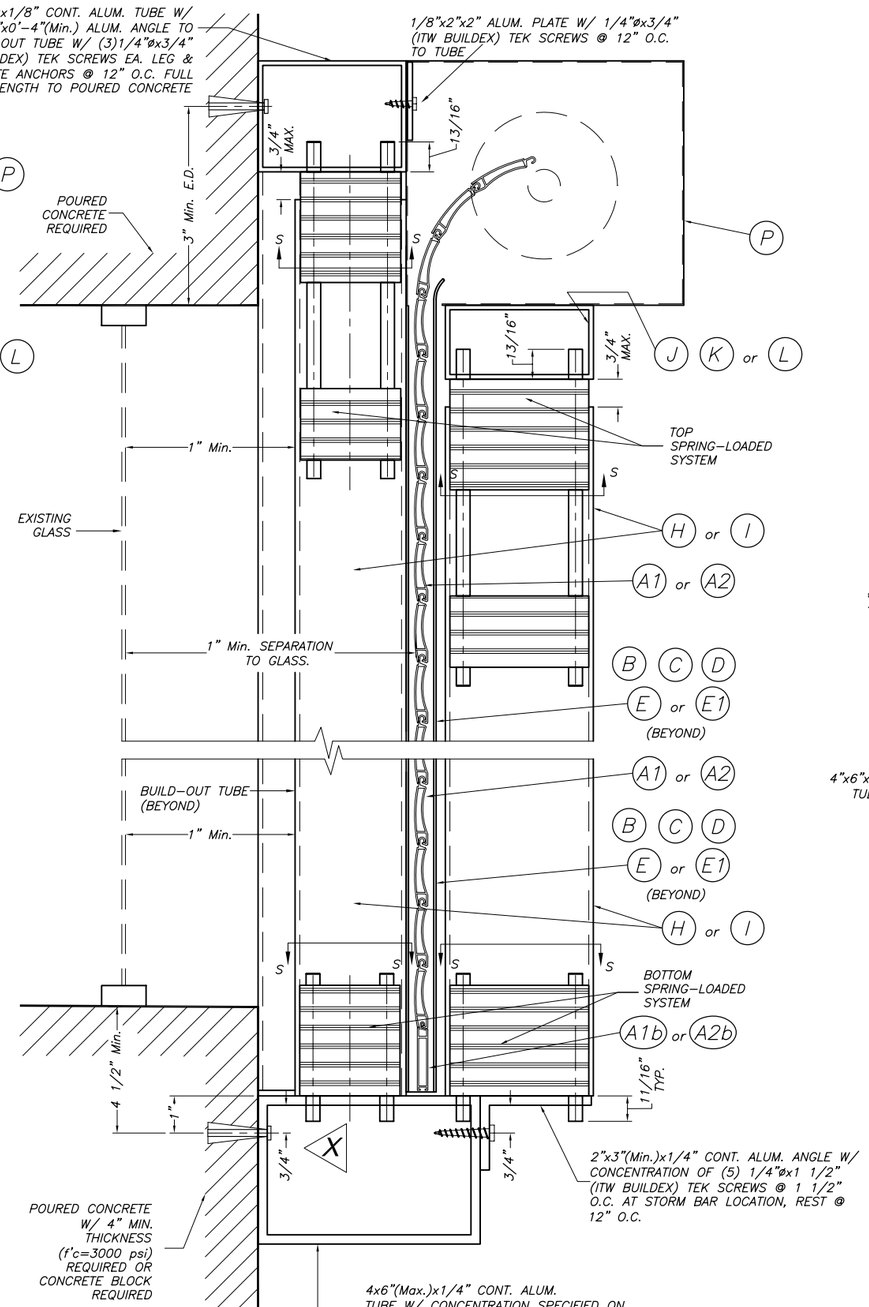

CASE II

REMOVABLE STORM BAR CONNECTION AT BUILD-OUT INSTALLATIONS W/SPRING-LOADED SYSTEM *

SCALE : 1/4" = 1"

* SEE SHEET 4 OF 19 FOR SPECS. & DETAILS.

SECTIONS V – V (3)

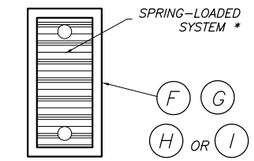

SECTION S – S :

SCALE : 1/2" = 1"

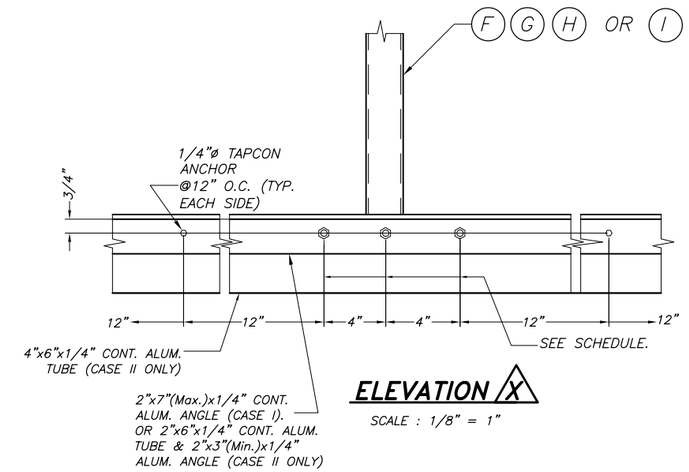

ELEVATION X

SCALE : 1/8" = 1"

ANCHORS & STORM BARS SCHEDULE FOR ELEVATION. X			
CASES	SUBSTRATE	ANCHOR TYPE	STORM BAR TYPE
CASE 1	BLOCK	(3) 3/8"ø POWER BOLT	F, G
	CONCRETE	(1) 3/8"ø KWIK BOLT TZ	
CASE 2	BLOCK	(3) 3/8"ø POWER BOLT	H, I
	CONCRETE	(1) 3/8"ø KWIK BOLT TZ	

T.D.I. – 2006

WALTER A. TILLIT Jr. P.E.
PROFESSIONAL ENGINEER
6355 N.W. 36 STREET, STE. 305
VIRGINIA GARDENS, FL 33166
PHONE (305) 871-1530 FAX (305) 871-1531
TEXAS LIC. # 90691

60mm & 40mm ROLL-UP SHUTTER

ATLANTIC METAL EXTRUSIONS, LLC.
1243 ETRUSCAN WAY
INDIAN HARBOUR BEACH, FLORIDA 32937
PH: (859) 227-1320 FAX: (321) 777-6072

REV. NO	DESCRIPTION	DATE	REV. No	DESCRIPTION	DATE
1			3		
2			4		

DRAWN BY: F.P.

12/11/08 DATE

08-265 DRAWING No

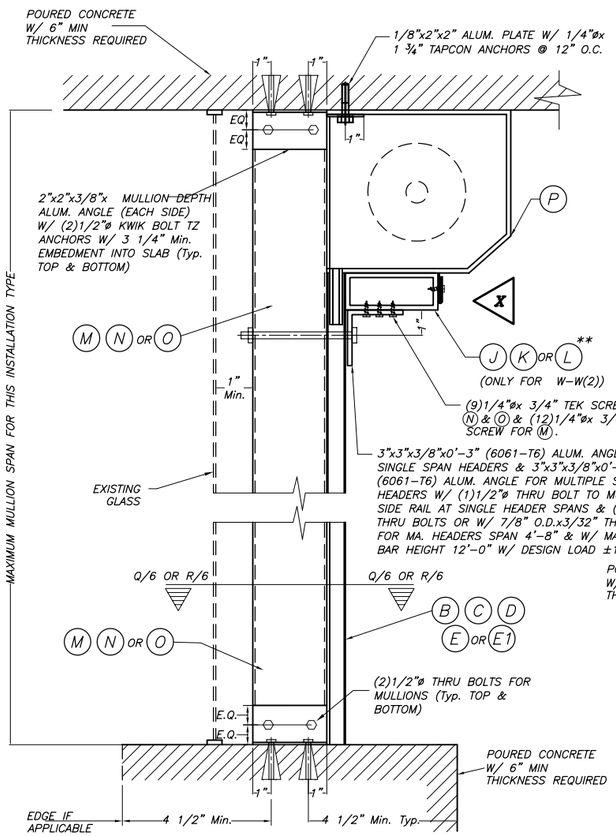

FLOOR/CEILING MOUNTING : SECTION W-W (1), W/O HEADER SECTION W-W (2), W/HEADER

SCALE : 1/8" = 1"

** NOTE:

USE L HEADER ONLY FOR SINGLE SPAN INSTALLATIONS, IF MULTIPLE SPANS ARE NEEDED, THEN USE DOUBLE MULLIONS W/3" GAP IN BETWEEN THEMSELVES FOR EACH INDIVIDUAL SPAN.

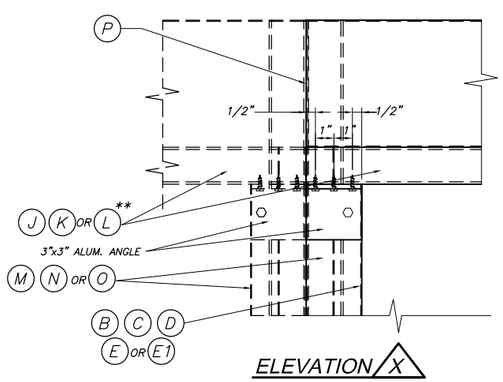

ELEVATION X

SCALE : 1/8" = 1"

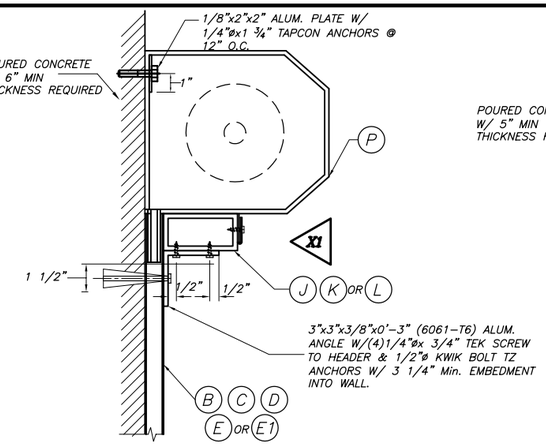

ALTERNATIVE 1 WALL MOUNTING : SECTION W-W (3)

SCALE : 1/8" = 1"

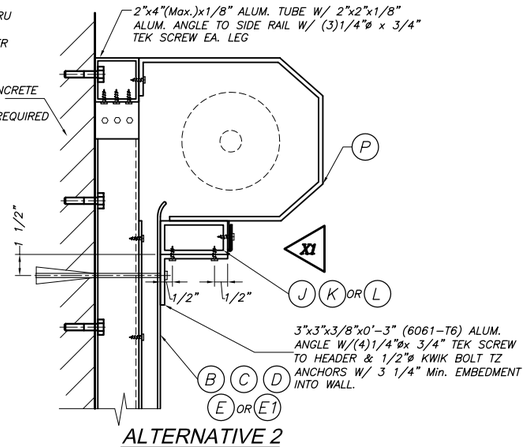

ALTERNATIVE 2 WALL MOUNTING : SECTION W-W(3)

SCALE : 1/8" = 1"

NOTE:
INSTALLATION DETAILS SHOWN ON ALTERNATIVES 1 & 2 ARE VALID FOR ANY STORM BAR HEIGHT AND HEADER SPAN CONDITION UNDER 65 psf, FOR DESIGN LOADS BETWEEN 65 psf TO 120 psf USE MAX. STORM BAR HEIGHT AND HEADER SPAN CONDITIONS SHOWN ON TABLE 5. USE ALTERNATIVE 3 FOR LOADS GREATER THAN 120 psf.

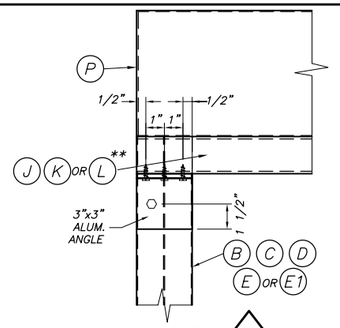

ELEVATION X1

SCALE : 1/8" = 1"

TYPICAL HEADER CONNECTION AT ENDS: SECTION W-W

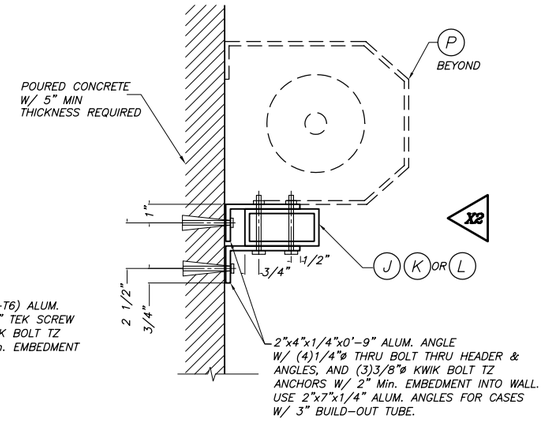

ALTERNATIVE 3 WALL MOUNTING : SECTION W-W(3)

SCALE : 1/8" = 1"

NOTE:
VALID ALSO FOR ANY SPAN AND LOAD CONDITION

TABLE 5

DESIGN LOAD "W" (p.s.f.)	"L" MAX. STORM BAR HEIGHT	"L" MAX. J, K & L HEADER SPAN +
65.0	6'-0"	16'-0"
	8'-0"	13'-10"
	10'-0"	12'-5"
	12'-0"	11'-4"
	14'-0"	10'-6"
70.0	6'-0"	15'-5"
	8'-0"	13'-4"
	10'-0"	11'-11"
	12'-0"	10'-11"
	14'-0"	10'-1"
80.0	6'-0"	14'-5"
	8'-0"	12'-6"
	10'-0"	11'-2"
	12'-0"	10'-2"
	14'-0"	9'-3"
90.0	6'-0"	13'-7"
	8'-0"	11'-9"
	10'-0"	10'-5"
	12'-0"	9'-7"
	14'-0"	8'-3
100.0	6'-0"	12'-11"
	8'-0"	11'-2"
	10'-0"	10'-0"
	12'-0"	8'-7"
	14'-0"	7'-4"
120.0	6'-0"	11'-9"
	8'-0"	10'-2"
	10'-0"	8'-7"
	12'-0"	7'-1"
	14'-0"	6'-2"

+ MAX. HEADER SPAN SHALL NOT EXCEED VALUES SHOWN ON SCHEDULE ON SHEET 18.

NOTE 1:
EXISTING WALL MAY BE CONCRETE BLOCK W/ 1 1/2" Min. ANCHOR EMBEDMENT FOR DESIGN LOADS UP TO 80.0 psf W/ 9'-0" Max. MULLION HEIGHT AND 5'-0" MAX. MULLION SPACING AND SHALL BE 4" MIN. THICK POURED CONCRETE W/ 2" Min. ANCHOR EMBEDMENT FOR GREATER LOADS.

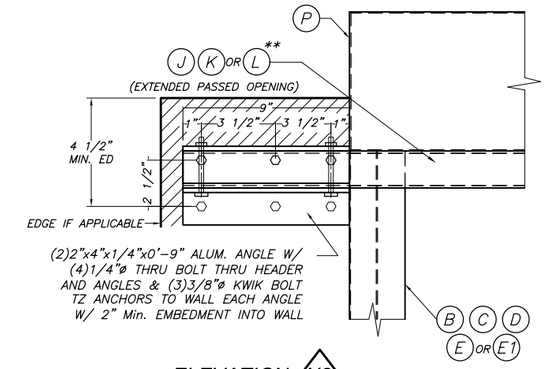

ELEVATION X2

SCALE : 1/8" = 1"

TYPICAL HEADER CONNECTION AT ENDS: SECTION W-W

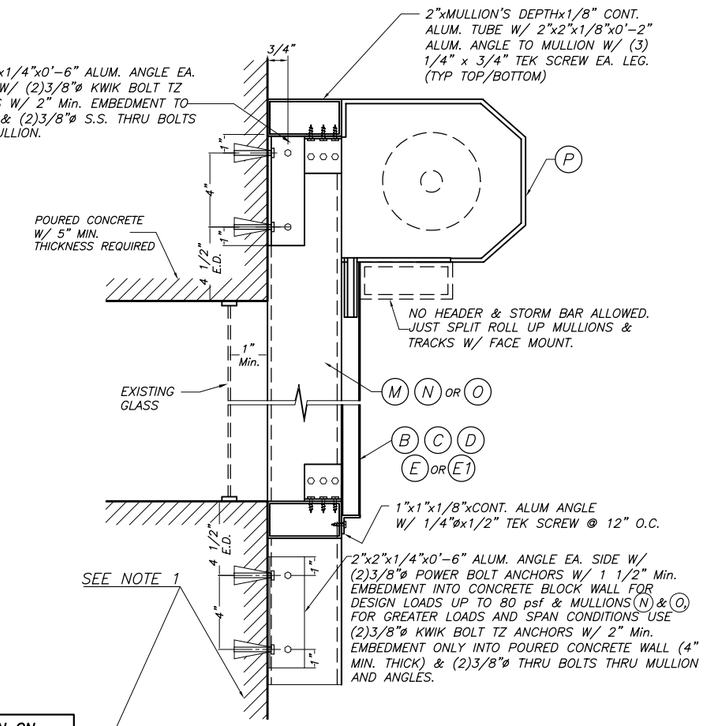

WALL MOUNTING : MULLION CONNECTION AT TOP & BOTTOM : SECTION W-W (1)

SCALE : 1/8" = 1"

T.D.I. – 2006

WALTER A. TILLIT Jr. P.E.
PROFESSIONAL ENGINEER

6355 N.W. 36 STREET, STE. 305
VIRGINIA GARDENS, FL 33166
PHONE (305) 871-1530 FAX (305) 871-1531

TEXAS LIC. # 90691

60mm & 40mm ROLL-UP SHUTTER

ATLANTIC METAL EXTRUSIONS, LLC.
1243 ETRUSCAN WAY
INDIAN HARBOUR BEACH, FLORIDA 32937
PH: (859) 227-1320 FAX: (321) 777-6072

REV. NO	DESCRIPTION	DATE	REV. No	DESCRIPTION	DATE
1			3		
2			4		

DRAWN BY: F.P.

12/11/08 DATE

08-265 DRAWING No

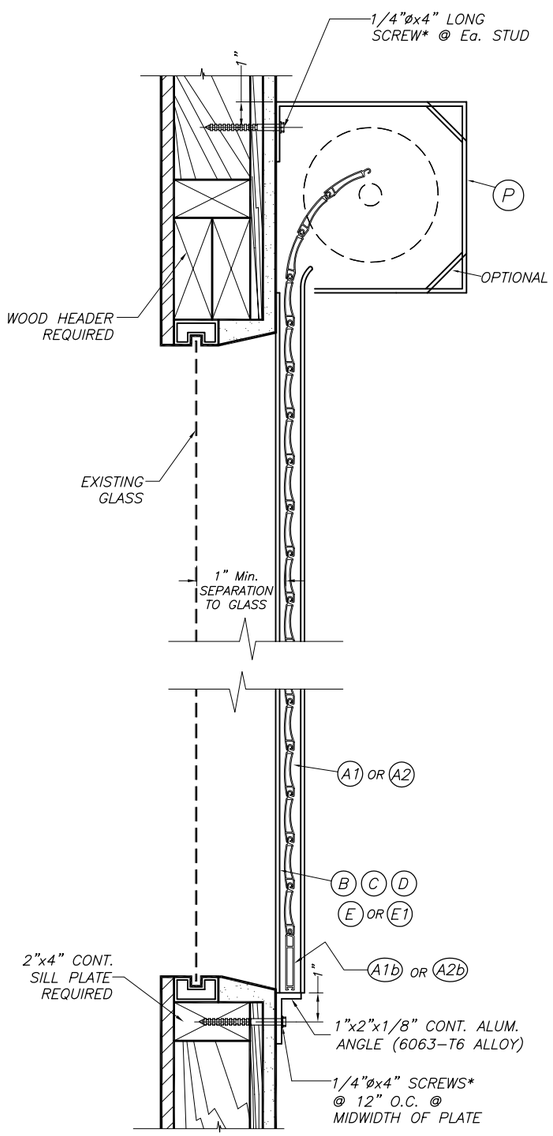

WALL MOUNTING INSTALLATION SINGLE SPAN CONDITION

N. T. S.

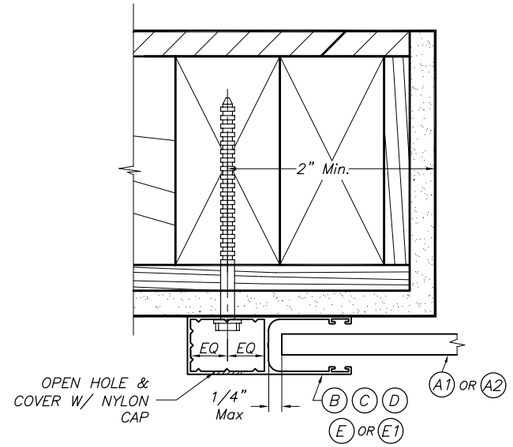

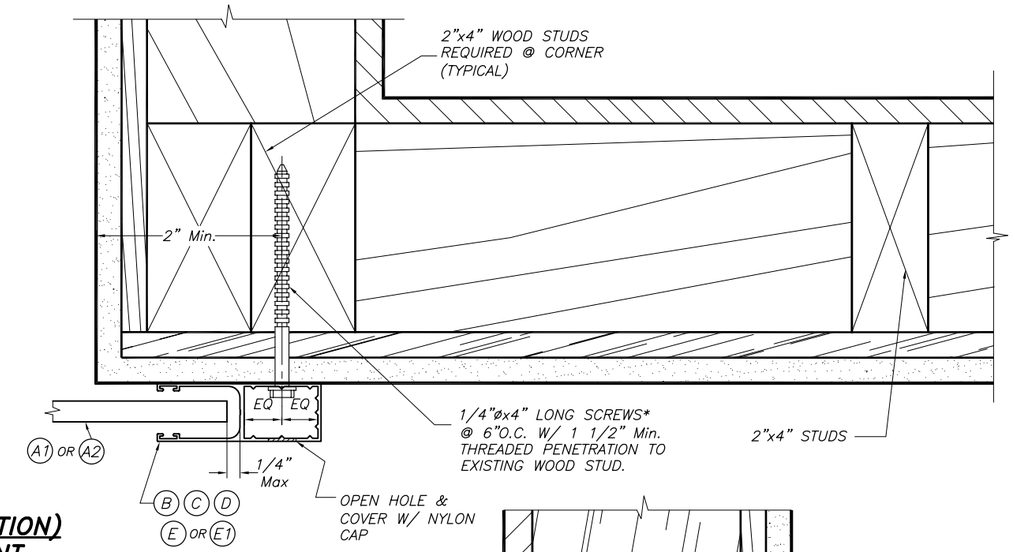

PLAN A (SECTION) WALL MOUNT

SCALE : 3/8" = 1"

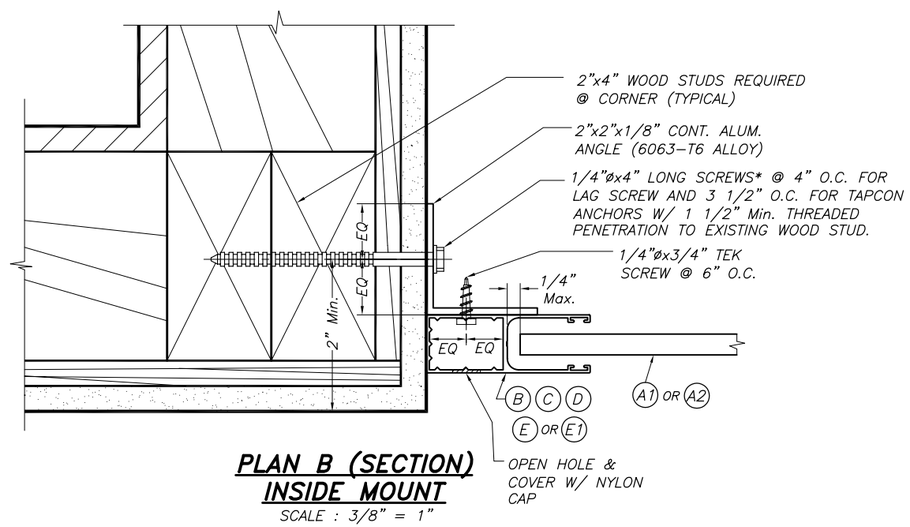

PLAN B (SECTION) INSIDE MOUNT

SCALE : 3/8" = 1"

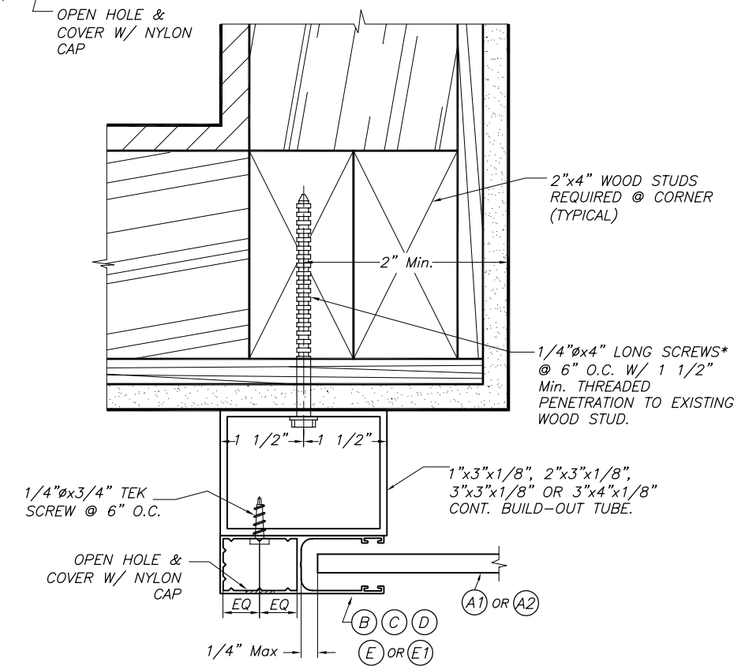

PLAN C (SECTION) BUILD-OUT

SCALE : 3/8" = 1"

NOTES:

1. INSTALLATIONS ARE ONLY VALID FOR BUILDINGS WITH DESIGN LOADS UP TO 90.0 psf.
2. FOR NEW FRAME CONSTRUCTION: WOOD MEMBER TO BE SOUTHERN PINE No. 2 W/ SPECIFIC DENSITY OF 0.55 OR EQUAL.
3. MINIMUM PENETRATION OF SCREWS* INTO WOOD MEMBER TO BE 1 1/2".
4. * SCREWS = LAG SCREWS OR TAPCONS.

T.D.I. – 2006

WALTER A. TILLIT Jr. P.E.
PROFESSIONAL ENGINEER

6355 N.W. 36 STREET, STE. 305
VIRGINIA GARDENS, FL 33166
PHONE (305) 871-1530 FAX (305) 871-1531

TEXAS LIC. # 90691

60mm & 40mm ROLL-UP SHUTTER

ATLANTIC METAL EXTRUSIONS, LLC.
1243 ETRUSCAN WAY
INDIAN HARBOUR BEACH, FLORIDA 32937
PH: (859) 227-1320 FAX: (321) 777-6072

REV. NO	DESCRIPTION	DATE	REV. No	DESCRIPTION	DATE
1			3		
2			4		

DRAWN BY: F.P.

12/11/08 DATE

08-265 DRAWING No

SHEET 14 OF 19

SLAT PERFORMANCE CHART: MAXIMUM NEGATIVE DESIGN PRESSURE RATING "W"(p.s.f) AND CORRESPONDING MAXIMUM SLAT SPAN "L" FOR TYPE 1 & 2 SLAT

(USE MAXIMUM VALUES BETWEEN POSITIVE & NEGATIVE LOADS)

SLAT TYPE	A1 W/ SIDE RAIL B	A1 W/ SIDE RAIL C	A1 W/ SIDE RAIL D	A2 W/ SIDE RAIL E	A2 W/ SIDE RAIL E1
MAXIMUM DESIGN LOAD "W" (p.s.f.)	MAXIMUM SLAT SPAN	MAXIMUM SLAT SPAN	MAXIMUM SLAT SPAN	MAXIMUM SLAT SPAN	MAXIMUM SLAT SPAN
25.0	8'-4"	7'-4"	7'-0"	5'-6"	5'-0"
30.0	7'-11"	6'-9"	6'-7"	5'-3"	4'-9"
35.0	7'-7"	6'-6"	6'-4"	5'-0"	4'-6"
40.0	7'-3"	6'-3"	6'-1"	4'-10"	4'-4"
45.0	7'-1"	6'-0"	5'-11"	4'-8"	4'-2"
50.0	6'-10"	5'-10"	5'-8"	4'-7"	4'-1"
55.0	6'-8"	5'-8"	5'-7"	4'-5"	4'-0"
60.0	6'-6"	5'-7"	5'-5"	4'-4"	3'-10"
65.0	6'-4"	5'-5"	5'-4"	4'-3"	3'-9"
70.0	6'-3"	5'-4"	5'-2"	4'-2"	3'-8"
75.0	6'-1"	5'-3"	5'-1"	4'-1"	3'-8"
80.0	6'-0"	5'-3"	5'-0"	4'-0"	3'-7"
85.0	5'-10"	5'-0"	4'-11"	3'-11"	3'-6"
90.0	5'-8"	4'-11"	4'-10"	3'-10"	3'-5"
95.0	5'-6"	4'-10"	4'-9"	3'-9"	3'-5"
100.0	5'-4"	4'-8"	4'-8"	3'-9"	3'-4"
105.0	5'-3"	4'-7"	4'-7"	3'-8"	3'-4"
110.0	5'-1"	4'-7"	4'-7"	3'-8"	3'-3"
115.0	5'-0"	4'-6"	4'-6"	3'-7"	3'-3"
120.0	4'-11"	4'-5"	4'-5"	3'-6"	3'-2"
125.0	4'-10"	4'-5"	4'-5"	3'-5"	3'-2"
130.0	4'-8"	4'-4"	4'-4"	3'-4"	3'-1"
135.0	4'-7"	4'-4"	4'-4"	3'-4"	3'-1"
140.0	4'-6"	4'-3"	4'-3"	3'-3"	3'-0"
145.0	4'-5"	4'-3"	4'-3"	3'-2"	3'-0"
150.0	4'-5"	4'-2"	4'-2"	3'-2"	3'-0"
155.0	4'-4"	4'-2"	4'-2"	3'-1"	2'-11"
160.0	4'-3"	4'-1"	4'-1"	3'-0"	2'-11"

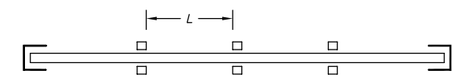

QUADRUPLE SPAN

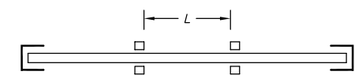

TRIPLE SPAN

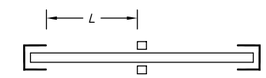

DOUBLE SPAN

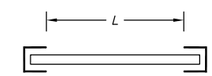

SINGLE SPAN

SPAN DEFINITION

* MINIMUM SEPARATION TO GLASS FOR SINGLE AND MULTIPLE UNITS SHALL BE MEASURED FROM BACK OF SLAT TO GLASS AND SHALL BE 1".

T.D.I. – 2006

WALTER A. TILLIT Jr. P.E.
PROFESSIONAL ENGINEER

6355 N.W. 36 STREET, STE. 305
VIRGINIA GARDENS, FL 33166
PHONE (305) 871-1530 FAX (305) 871-1531

TEXAS LIC. # 90691

60mm & 40mm ROLL-UP SHUTTER

ATLANTIC METAL EXTRUSIONS, LLC.
1243 ETRUSCAN WAY
INDIAN HARBOUR BEACH, FLORIDA 32937
PH: (859) 227-1320 FAX: (321) 777-6072

REV. NO	DESCRIPTION	DATE	REV. No	DESCRIPTION	DATE
1			3		
2			4		

DRAWN BY: F.P.

12/11/08 DATE

08-265 DRAWING No

STORM BAR LOADING CHART
MAXIMUM DESIGN PRESSURE RATING "W" (p.s.f.) AND CORRESPONDING MAXIMUM SPAN "L" FOR A GIVEN TYPE OF STORM BAR AND STORM BAR SPACING.

(USE MAXIMUM VALUES BETWEEN POSITIVE & NEGATIVE LOADS)

MAX. SPAN FOR STORM BARS W/ REGULAR CONCRETE ANCHORS

MAXIMUM DESIGN LOAD "W" (p.s.f.)	TYPE 1 STORM BAR 2" x 2" x 1/4" (F)					TYPE 2 STORM BAR 2" x 3" x 1/8" (G)					TYPE 3 STORM BAR 2" x 4" x 1/8" (H)					TYPE 4 STORM BAR 2" x 4" x 1/4" (I)				
	* STORM BAR SPACING					* STORM BAR SPACING					* STORM BAR SPACING					* STORM BAR SPACING				
	⩽ 3'–0"	3' TO 4'	4' TO 5'	5' TO 6'	6' TO 6.5'	⩽ 3'–0"	3' TO 4'	4' TO 5'	5' TO 6'	6' TO 6.5'	⩽ 3'–0"	3' TO 4'	4' TO 5'	5' TO 6'	6' TO 6.5'	⩽ 3'–0"	3' TO 4'	4' TO 5'	5' TO 6'	6' TO 6.5'
45 OR LESS	7'–5"	6'–11"	6'–4"	5'–10"	5'–7"	8'–0"	7'–4"	6'–7"	6'–0"	5'–9"	9'–11"	8'–11"	8'–0"	7'–4"	7'–0"	11'–6"	10'–8"	10'–1"	9'–8"	9'–3"
50	7'–3"	6'–9"	6'–0"	5'–6"	5'–4"	8'–0"	6'–11"	6'–3"	5'–8"	5'–5"	9'–8"	8'–6"	7'–7"	6'–11"	6'–8"	11'–2"	10'–5"	9'–10"	9'–2"	8'–10"
55	7'–0"	6'–5"	5'–9"	5'–3"	–	7'–8"	6'–8"	5'–11"	5'–5"	–	9'–4"	8'–1"	7'–3"	6'–7"	–	10'–11"	10'–2"	9'–7"	8'–9"	–
60	6'–11"	6'–2"	5'–6"	5'–0"	–	7'–4"	6'–4"	5'–8"	5'–2"	–	8'–11"	7'–9"	6'–11"	6'–4"	–	10'–8"	9'–11"	9'–2"	8'–4"	–
65	6'–9"	5'–11"	5'–4"	4'–10"	–	7'–1"	6'–2"	5'–5"	5'–0"	–	8'–7"	7'–5"	6'–8"	6'–1"	–	10'–6"	9'–9"	8'–10"	8'–1"	–
70	6'–7"	5'–8"	5'–1"	4'–8"	–	6'–9"	5'–11"	5'–3"	4'–10"	–	8'–3"	7'–2"	6'–5"	5'–10"	–	10'–4"	9'–6"	8'–6"	7'–9"	–
75	6'–4"	5'–6"	4'–11"	4'–6"	–	6'–7"	5'–8"	5'–1"	4'–8"	–	8'–0"	6'–11"	6'–2"	5'–8"	–	10'–1"	9'–2"	8'–2"	7'–6"	–
80	6'–2"	5'–4"	4'–9"	4'–4"	–	6'–4"	5'–6"	4'–11"	4'–6"	–	7'–9"	6'–9"	6'–0"	5'–6"	–	9'–11"	8'–11"	7'–11"	7'–3"	–
85	6'–0"	5'–2"	4'–8"	4'–3"	–	6'–2"	5'–4"	4'–9"	4'–4"	–	7'–6"	6'–6"	5'–10"	5'–4"	–	9'–10"	8'–7"	7'–8"	7'–0"	–
90	5'–10"	5'–0"	4'–6"	4'–1"	–	6'–0"	5'–2"	4'–8"	4'–3"	–	7'–4"	6'–4"	5'–8"	5'–2"	–	9'–8"	8'–4"	7'–6"	6'–10"	–
95	5'–8"	4'–11"	4'–5"	4'–0"	–	5'–10"	5'–1"	4'–6"	4'–1"	–	7'–1"	6'–2"	5'–6"	5'–0"	–	9'–5"	8'–2"	7'–3"	6'–8"	–
100	5'–6"	4'–9"	4'–3"	3'–11"	–	5'–8"	4'–11"	4'–5"	4'–0"	–	6'–11"	6'–0"	5'–4"	4'–11"	–	9'–2"	7'–11"	7'–1"	6'–6"	–
105	5'–5"	4'–8"	4'–2"	3'–10"	–	5'–7"	4'–10"	4'–4"	3'–11"	–	6'–9"	5'–10"	5'–3"	4'–9"	–	8'–11"	7'–9"	6'–11"	6'–4"	–
110	5'–3"	4'–7"	4'–1"	–	–	5'–5"	4'–8"	4'–2"	–	–	6'–7"	5'–9"	5'–1"	–	–	8'–9"	7'–7"	6'–9"	–	–
115	5'–2"	4'–5"	4'–0"	–	–	5'–4"	4'–7"	4'–1"	–	–	6'–6"	5'–7"	5'–0"	–	–	8'–7"	7'–5"	6'–8"	–	–
120	5'–0"	4'–4"	3'–11"	–	–	5'–2"	4'–6"	4'–0"	–	–	6'–4"	5'–6"	4'–11"	–	–	8'–4"	7'–3"	6'–6"	–	–
125	4'–11"	4'–3"	3'–10"	–	–	5'–1"	4'–5"	3'–11"	–	–	6'–2"	5'–4"	4'–10"	–	–	8'–2"	7'–1"	6'–4"	–	–
130	4'–10"	4'–2"	3'–9"	–	–	5'–0"	4'–4"	3'–10"	–	–	6'–1"	5'–3"	4'–9"	–	–	8'–1"	7'–0"	6'–3"	–	–
135	4'–9"	4'–1"	3'–8"	–	–	4'–11"	4'–3"	3'–9"	–	–	6'–0"	5'–2"	4'–7"	–	–	7'–11"	6'–10"	6'–1"	–	–
140	4'–8"	4'–0"	3'–7"	–	–	4'–10"	4'–2"	3'–9"	–	–	5'–10"	5'–1"	4'–6"	–	–	7'–9"	6'–9"	6'–0"	–	–
145	4'–7"	4'–0"	3'–7"	–	–	4'–9"	4'–1"	3'–8"	–	–	5'–9"	5'–0"	4'–6"	–	–	7'–7"	6'–7"	5'–11"	–	–
150	4'–6"	3'–11"	3'–6"	–	–	4'–8"	4'–0"	3'–7"	–	–	5'–8"	4'–11"	4'–5"	–	–	7'–6"	6'–6"	5'–10"	–	–
155	4'–5"	3'–10"	3'–5"	–	–	4'–7"	3'–11"	3'–6"	–	–	5'–7"	4'–10	4'–4"	–	–	7'–4"	6'–5"	5'–8"	–	–
160	4'–4"	3'–9"	3'–5"	–	–	4'–6"	3'–11"	3'–6"	–	–	5'–6"	4'–9"	4'–3"	–	–	7'–3"	6'–3"	5'–7"	–	–

* STORM BAR SPACING SHALL BE SUCH THAT MAXIMUM SLAT SPAN SHALL NOT BE EXCEEDED.

T.D.I. – 2006

WALTER A. TILLIT Jr. P.E.
PROFESSIONAL ENGINEER

6355 N.W. 36 STREET, STE. 305
VIRGINIA GARDENS, FL 33166
PHONE (305) 871–1530 FAX (305) 871–1531

TEXAS LIC. # 90691

60mm & 40mm ROLL–UP SHUTTER

ATLANTIC METAL EXTRUSIONS, LLC.
1243 ETRUSCAN WAY
INDIAN HARBOUR BEACH, FLORIDA 32937
PH: (859) 227–1320 FAX: (321) 777–6072

REV. NO	DESCRIPTION	DATE	REV. No	DESCRIPTION	DATE
1			3		
2			4		

DRAWN BY: F.P.

12/11/08 DATE

08–265 DRAWING No

STORM BAR LOADING CHART
MAXIMUM DESIGN PRESSURE RATING "W" (p.s.f.) AND CORRESPONDING MAXIMUM SPAN "L" FOR A GIVEN TYPE OF STORM BAR AND STORM BAR SPACING.

(USE MAXIMUM VALUES BETWEEN POSITIVE & NEGATIVE LOADS)

MAX. SPAN FOR STORM BARS W/SPRING-LOADED SYSTEM

MAXIMUM DESIGN LOAD "W" (p.s.f.)	TYPE 1 STORM BAR 2"x2"x1/4" (F)					TYPE 2 STORM BAR 2"x3"x1/8" (G)					TYPE 3 STORM BAR 2"x4"x1/8" (H)					TYPE 4 STORM BAR 2"x4"x1/4" (I)				
	STORM BAR SPACING *					STORM BAR SPACING *					STORM BAR SPACING *					STORM BAR SPACING *				
	⩽ 2'-0"	2' TO 3'	3' TO 4'	4' TO 5'	5' TO 6'	⩽ 2'-0"	2' TO 3'	3' TO 4'	4' TO 5'	5' TO 6'	⩽ 2'-0"	2' TO 3'	3' TO 4'	4' TO 5'	5' TO 6'	⩽ 2'-0"	2' TO 3'	3' TO 4'	4' TO 5'	5' TO 6'
25	7'-6"	7'-6"	7'-6"	7'-6"	7'-1"	7'-6"	7'-6"	7'-6"	7'-6"	7'-1"	10'-0"	10'-0"	9'-7"	7'-8"	6'-4"	11'-6"	11'-6"	10'-7"	8'-6"	7'-1"
30	7'-6"	7'-6"	7'-6"	7'-1"	5'-11"	7'-6"	7'-6"	7'-6"	7'-1"	5'-11"	10'-0"	10'-0"	8'-0"	6'-4"	5'-4"	11'-6"	11'-6"	8'-10"	7'-1"	5'-11"
35	7'-6"	7'-6"	7'-6"	6'-1"	5'-0"	7'-6"	7'-6"	7'-6"	6'-1"	5'-0"	10'-0"	9'-1"	6'-10"	5'-5"	4'-6"	11'-6"	10'-1"	7'-7"	6'-1"	5'-0"
40	7'-6"	7'-6"	6'-8"	5'-4"	4'-5"	7'-6"	7'-6"	6'-8"	5'-4"	4'-5"	10'-0"	8'-0"	6'-0"	4'-9"	4'-0"	11'-6"	8'-10"	6'-8"	5'-4"	4'-5"
45	7'-6"	7'-6"	5'-11"	4'-8"	–	7'-6"	7'-6"	5'-11"	4'-8"	–	10'-0"	7'-1"	5'-4"	4'-3"	–	11'-6"	7'-10"	5'-11"	4'-8"	–
50	7'-6"	7'-1"	5'-4"	4'-3"	–	7'-6"	7'-1"	5'-4"	4'-3"	–	9'-7"	6'-4"	4'-9"	–	–	10'-7"	7'-1"	5'-4"	4'-3"	–
55	7'-6"	6'-5"	4'-10"	–	–	7'-6"	6'-5"	4'-10"	–	–	8'-8"	5'-9"	4'-4"	–	–	9'-8"	6'-5"	4'-10"	–	–
60	7'-6"	5'-11"	4'-5"	–	–	7'-6"	5'-11"	4'-5"	–	–	8'-0"	5'-4"	4'-0"	–	–	8'-10"	5'-11"	4'-5"	–	–
65	7'-6"	5'-5"	4'-1"	–	–	7'-6"	5'-5"	4'-1"	–	–	7'-4"	4'-11"	–	–	–	8'-2"	5'-5"	4'-1"	–	–
70	7'-6"	5'-0"	–	–	–	7'-6"	5'-0"	–	–	–	6'-10"	4'-6"	–	–	–	7'-7"	5'-0"	–	–	–
75	7'-1"	4'-8"	–	–	–	7'-1"	4'-8"	–	–	–	6'-4"	4'-3"	–	–	–	7'-1"	4'-8"	–	–	–
80	6'-8"	4'-5"	–	–	–	6'-8"	4'-5"	–	–	–	6'-0"	4'-0"	–	–	–	6'-8"	4'-5"	–	–	–
85	6'-3"	4'-2"	–	–	–	6'-3"	4'-2"	–	–	–	5'-7"	–	–	–	–	6'-3"	4'-2"	–	–	–
90	5'-11"	–	–	–	–	5'-11"	–	–	–	–	5'-4"	–	–	–	–	5'-11"	–	–	–	–
95	5'-7"	–	–	–	–	5'-7"	–	–	–	–	5'-0"	–	–	–	–	5'-7"	–	–	–	–
100	5'-4"	–	–	–	–	5'-4"	–	–	–	–	4'-9"	–	–	–	–	5'-4"	–	–	–	–
105	5'-0"	–	–	–	–	5'-0"	–	–	–	–	4'-6"	–	–	–	–	5'-0"	–	–	–	–
110	4'-10"	–	–	–	–	4'-10"	–	–	–	–	4'-4"	–	–	–	–	4'-10"	–	–	–	–
115	4'-7"	–	–	–	–	4'-7"	–	–	–	–	4'-2"	–	–	–	–	4'-7"	–	–	–	–
120	4'-5"	–	–	–	–	4'-5"	–	–	–	–	4'-0"	–	–	–	–	4'-5"	–	–	–	–
125	4'-3"	–	–	–	–	4'-3"	–	–	–	–	–	–	–	–	–	4'-3"	–	–	–	–
130	4'-1"	–	–	–	–	4'-1"	–	–	–	–	–	–	–	–	–	4'-1"	–	–	–	–

* STORM BAR SPACING SHALL BE SUCH THAT MAXIMUM SLAT SPAN SHALL NOT BE EXCEEDED.

T.D.I. – 2006

WALTER A. TILLIT Jr. P.E.
PROFESSIONAL ENGINEER

6355 N.W. 36 STREET, STE. 305
VIRGINIA GARDENS, FL 33166
PHONE (305) 871-1530 FAX (305) 871-1531

TEXAS LIC. # 90691

60mm & 40mm ROLL-UP SHUTTER

ATLANTIC METAL EXTRUSIONS, LLC.
1243 ETRUSCAN WAY
INDIAN HARBOUR BEACH, FLORIDA 32937
PH: (859) 227-1320 FAX: (321) 777-6072

REV. NO	DESCRIPTION	DATE	REV. No	DESCRIPTION	DATE
1			3		
2			4		

DRAWN BY: F.P.

12/11/08 DATE

08-265 DRAWING No

HEADER LOADING CHART MAXIMUM NEGATIVE DESIGN PRESSURE RATING "W" (p.s.f) AND CORRESPONDING MAXIMUM SPAN "L" FOR A GIVEN TYPE OF HEADER.

(USE MAXIMUM VALUES BETWEEN POSITIVE & NEGATIVE LOADS)

MAXIMUM DESIGN LOAD "W" (p.s.f.)	TYPE 1 HEADER (J) 2" x 4" x 1/8"			TYPE 2 HEADER (K) 2" x 4" x 1/4"					TYPE 3 HEADER (L) 2" x 6" x 1/4"				
	STORM BAR HEIGHT			STORM BAR HEIGHT					STORM BAR HEIGHT				
	⩽ 5'-0"	5' TO 8'	8' TO 10'	⩽ 6'-0"	6' TO 8'	8' TO 10'	10' TO 12'	12' TO 14'	⩽ 6'-0"	6' TO 8'	8' TO 10'	10' TO 12'	12' TO 14'
40.0 OR LESS	12'-2"	9'-8"	8'-8"	14'-10"	12'-10"	11'-6"	10'-6"	9'-9"	19'-4"	17'-8"	15'-9"	14'-5"	13'-4"
45.0	11'-6"	9'-1"	8'-2"	14'-0"	12'-2"	10'-10"	9'-11"	9'-2"	18'-10"	16'-8"	14'-11"	13'-7"	12'-7"
50.0	10'-11"	8'-8"	7'-9"	13'-4"	11'-6"	10'-4"	9'-5"	8'-8"	18'-3"	15'-9"	14'-1"	12'-11"	11'-11"
55.0	10'-5"	8'-3"	7'-4"	12'-8"	11'-0"	9'-10"	9'-0"	8'-4"	17'-5"	15'-1"	13'-6"	12'-3"	11'-5"
60.0	10'-0"	7'-11"	7'-1"	12'-2"	10'-6"	9'-5"	8'-7"	7'-11"	16'-8"	14'-5"	12'-11"	11'-9"	10'-11"
65.0	9'-7"	7'-7"	6'-9"	11'-8"	10'-1"	9'-0"	8'-3"	7'-8"	16'-0"	13'-10"	12'-5"	11'-4"	10'-6"
70.0	9'-3"	7'-4"	6'-6"	11'-3"	9'-9"	8'-8"	7'-11"	7'-4"	15'-5"	13'-4"	11'-11"	10'-11"	10'-1"
75.0	8'-11"	7'-1"	6'-4"	10'-10"	9'-5"	8'-5"	7'-8"	7'-1"	14'-11"	12'-11"	11'-6"	10'-6"	9'-9"
80.0	8'-8"	6'-10"	6'-1"	10'-6"	9'-1"	8'-2"	7'-5"	6'-11"	14'-5"	12'-6"	11'-2"	10'-2"	9'-5"
85.0	8'-4"	6'-7"	5'-11"	10'-2"	8'-10"	7'-11"	7'-3"	6'-8"	14'-0"	12'-1"	10'-10"	9'-11"	9'-2"
90.0	8'-2"	6'-5"	5'-9"	9'-11"	8'-7"	7'-8"	7'-0"	6'-6"	13'-7"	11'-9"	10'-6"	9'-7"	8'-11"
95.0	7'-11"	6'-3"	5'-7"	9'-8"	8'-4"	7'-6"	6'-10"	6'-4"	13'-3"	11'-5"	10'-3"	9'-4"	8'-8"
100.0	7'-9"	6'-1"	5'-6"	9'-5"	8'-2"	7'-3"	6'-8"	6'-2"	12'-11"	11'-2"	10'-0"	9'-1"	8'-5"
105.0	7'-6"	5'-11"	5'-4"	9'-2"	7'-11"	7'-1"	6'-6"	6'-0"	12'-7"	10'-11"	9'-9"	8'-11"	8'-3"
110.0	7'-4"	5'-10"	5'-2"	9'-0"	7'-9"	6'-11"	6'-4"	5'-10"	12'-3"	10'-8"	9'-6"	8'-8"	8'-1"
115.0	7'-2"	5'-8"	5'-1"	8'-9"	7'-7"	6'-9"	6'-2"	5'-9"	12'-0"	10'-5"	9'-4"	8'-6"	7'-10"
120.0	7'-1"	5'-7"	5'-0"	8'-7"	7'-5"	6'-8"	6'-1"	5'-7"	11'-9"	10'-2"	9'-1"	8'-4"	7'-8"
125.0	6'-11"	5'-6"	4'-11"	8'-5"	7'-3"	6'-6"	5'-11"	5'-6"	11'-6"	10'-0"	8'-11"	8'-2"	7'-7"
130.0	6'-9"	5'-4	4'-9"	8'-3"	7'-2"	6'-5"	5'-10"	5'-5"	11'-4"	9'-9"	8'-9"	8'-0"	7'-5"
135.0	6'-8"	5'-3"	4'-8"	8'-1"	7'-0"	6'-3"	5'-9"	5'-4"	11'-1"	9'-7"	8'-7"	7'-10"	7'-3"
140.0	6'-6"	5'-2"	4'-7"	7'-11"	6'-11"	6'-2"	5'-7"	5'-2"	10'-11"	9'-5"	8'-5"	7'-8"	7'-2"
145.0	6'-5"	5'-1"	4'-6"	7'-10"	6'-9"	6'-1"	5'-6"	5'-1"	10'-8"	9'-3"	8'-3"	7'-7"	7'-0"
150.0	6'-4"	5'-0"	4'-5"	7'-8"	6'-8"	5'-11"	5'-5"	5'-0"	10'-6"	9'-1"	8'-2"	7'-5"	6'-11"
155.0	6'-2"	4'-11"	4'-5"	7'-7"	6'-7"	5'-10"	5'-4"	4'-11"	10'-4"	9'-0"	8'-0"	7'-4"	6'-9"
160.0	6'-1"	4'-10"	4'-4"	7'-5"	6'-5"	5'-9"	5'-3"	4'-10"	10'-2"	8'-10"	7'-11"	7'-2"	6'-8"

T.D.I. – 2006

WALTER A. TILLIT Jr. P.E.
PROFESSIONAL ENGINEER

6355 N.W. 36 STREET, STE. 305
VIRGINIA GARDENS, FL 33166
PHONE (305) 871-1530 FAX (305) 871-1531

TEXAS LIC. # 90691

60mm & 40mm ROLL-UP SHUTTER

ATLANTIC METAL EXTRUSIONS, LLC.
1243 ETRUSCAN WAY
INDIAN HARBOUR BEACH, FLORIDA 32937
PH: (859) 227-1320 FAX: (321) 777-6072

REV. NO	DESCRIPTION	DATE	REV. No	DESCRIPTION	DATE
1			3		
2			4		

DRAWN BY: F.P.

12/11/08 DATE

08-265 DRAWING No

MULLION LOADING CHART MAXIMUM DESIGN PRESSURE RATING "W" (p.s.f) AND CORRESPONDING MAXIMUM SPAN "L"(Ft) FOR A GIVEN TYPE OF MULLION AND MULLION SPACING (Ft.).

(USE MAXIMUM VALUES BETWEEN POSITIVE & NEGATIVE LOADS)

MAXIMUM DESIGN LOAD "W" (p.s.f.)	TYPE 1 MULLION M 2" x 3" x 1/4"				TYPE 2 MULLION N 4" x 4" x 1/4"				TYPE 3 MULLION O 4" x 6" x 1/4"					
	MULLION SPACING				MULLION SPACING				MULLION SPACING					
	⩽ 3'-0"	3' TO 4'	4' TO 5'	5' TO 6'	⩽ 4'-0"	4' TO 5'	5' TO 6'	6' TO 8'	⩽ 4'-0"	4' TO 5'	5' TO 6'	6' TO 8'	8' TO 10'	10' TO 12
45.0 OR LESS	8'-3"	7'-6"	6'-11"	6'-6"	11'-4"	10'-6"	9'-11"	9'-0"	15'-8"	14'-7"	13'-8"	12'-5"	11'-7"	10'-11"
50.0	7'-11"	7'-3"	6'-8"	6'-4"	10'-11"	10'-2"	9'-7"	8'-8"	15'-2"	14'-1"	13'-3"	12'-0"	11'-2"	10'-6"
55.0	7'-8"	7'-0"	6'-6"	6'-1"	10'-7"	9'-10"	9'-3"	8'-5"	14'-8"	13'-7"	12'-10"	11'-8"	10'-10"	10'-2"
60.0	7'-6"	6'-10"	6'-4"	5'-11"	10'-3"	9'-9"	9'-0"	8'-2"	14'-3"	13'-3"	12'-5"	11'-4"	10'-6"	9'-11"
65.0	7'-3"	6'-7"	6'-2"	5'-9"	10'-0"	9'-4"	8'-9"	7'-11"	13'-11"	12'-11"	12'-2"	11'-0"	10'-3"	9'-8"
70.0	7'-1"	6'-6"	6'-0"	5'-8"	9'-9"	9'-1"	8'-6"	7'-9"	13'-7"	12'-7"	11'-10"	10'-9"	10'-0"	9'-5"
75.0	6'-11"	6'-4"	5'-10"	5'-6"	9'-7"	8'-10"	8'-4"	7'-7"	13'-3"	12'-3"	11'-7"	10'-6"	9'-9"	9'-2"
80.0	6'-10"	6'-2"	5'-9"	5'-5"	9'-4"	8'-8"	8'-2"	7'-5"	12'-11"	12'-0"	11'-4"	10'-3"	9'-7"	9'-0"
85.0	6'-8"	6'-1"	5'-7"	5'-3"	9'-2"	8'-6"	8'-0"	7'-3"	12'-8"	11'-9"	11'-1"	10'-1"	9'-4"	8'-9"
90.0	6'-6"	5'-11"	5'-6"	5'-2"	9'-0"	8'-4"	7'-10"	7'-2"	12'-5"	11'-7"	10'-11"	9'-11"	9'-2"	8'-6"
95.0	6'-5"	5'-10"	5'-5"	5'-1"	8'-10"	8'-2"	7'-9"	7'-0"	12'-3"	11'-4"	10'-8"	9'-9"	9'-0"	8'-3"
100.0	6'-4"	5'-9"	5'-4"	5'-0"	8'-8"	8'-1"	7'-7"	6'-11"	12'-0"	11'-2"	10'-6"	9'-7"	8'-10"	8'-1"
105.0	6'-3"	5'-8"	5'-3"	4'-11"	8'-6"	7'-11"	7'-6"	6'-9"	11'-10"	11'-0"	10'-4"	9'-5"	–	–
110.0	6'-1"	5'-7"	5'-2"	4'-10'	8'-5"	7'-10"	7'-4"	6'-8"	11'-8"	10'-10"	10'-2"	9'-3"	–	–
115.0	6'-0"	5'-6"	5'-1"	4'-9"	8'-3"	7'-8"	7'-3"	6'-7"	11'-6"	10'-8"	10'-0"	9'-1"	–	–
120.0	5'-11"	5'-5"	5'-0"	4'-9"	8'-2"	7'-7"	7'-2"	6'-6"	11'-4"	10'-6"	9'-11"	9'-0"	–	–
125.0	5'-10"	5'-4"	4'-11"	4'-8"	8'-1"	7'-6"	7'-0"	6'-5"	11-2"	10'-4"	9'-9"	8'-10"	–	–
130.0	5'-9"	5'-3"	4'-11"	4'-7"	7'-11"	7'-5"	6'-11"	6'-4"	11'-0"	10'-3"	9'-8"	8'-8"	–	–
135.0	5'-9"	5'-2"	4'-10"	4'-6"	7'-10"	7'-3"	6'-10"	6'-3"	10'-11"	10'-1"	9'-6"	8'-6"	–	–
140.0	5'-8"	5'-2"	4'-9"	4'-5"	7'-9"	7'-2"	6'-9"	6'-3"	10'-9"	10'-0"	9'-5"	8'-4"	–	–
145.0	5'-7"	5'-1"	4'-8"	4'-4"	7'-8"	7'-1"	6'-8"	6'-1"	10'-7"	9'-10"	9'-3"	8'-3"	–	–
150.0	5'-6"	5'-0"	4'-8"	4'-3"	7'-7"	7'-0"	6'-7"	6'-0"	10'-5"	9'-9"	9'-2"	8'-1"	–	–
155.0	5'-5"	4'-11"	4'-7"	4'-2"	7'-6"	7'-0"	6'-7"	5'-11"	10'-5"	9'-8"	9'-1"	7'-11"	–	–
160.0	5'-5"	4'-11"	4'-6"	4'-1"	7'-5"	6'-11"	6'-6"	5'-10"	10'-0"	9'-7"	9'-0"	7'-10"	–	–

NOTES : REFER TO ELEVATIONS ON SHEET 2 OF 19

1-. FOR MULLIONS INSTALLED W/O STORM BARS

A) MULLION SPACING SHALL BE SUCH THAT MAXIMUM SLAT SPAN SHALL NOT BE EXCEEDED

2-. FOR MULLIONS INSTALLED W/ STORM BARS & HEADERS

A) MULLION SPACING SHALL BE SUCH THAT MAXIMUM HEADER SPAN SHALL NOT BE EXCEEDED

B) STORM BAR SPACING SHALL BE SUCH THAT MAXIMUM SLAT SPAN SHALL NOT BE EXCEEDED

T.D.I. – 2006

WALTER A. TILLIT Jr. P.E.
PROFESSIONAL ENGINEER

6355 N.W. 36 STREET, STE. 305
VIRGINIA GARDENS, FL 33166
PHONE (305) 871-1530 FAX (305) 871-1531

TEXAS LIC. # 90691

60mm & 40mm ROLL-UP SHUTTER

ATLANTIC METAL EXTRUSIONS, LLC.
1243 ETRUSCAN WAY
INDIAN HARBOUR BEACH, FLORIDA 32937
PH: (859) 227-1320 FAX: (321) 777-6072

REV. NO	DESCRIPTION	DATE	REV. No	DESCRIPTION	DATE
1			3		
2			4		

DRAWN BY: F.P.

12/11/08 DATE

08-265 DRAWING No