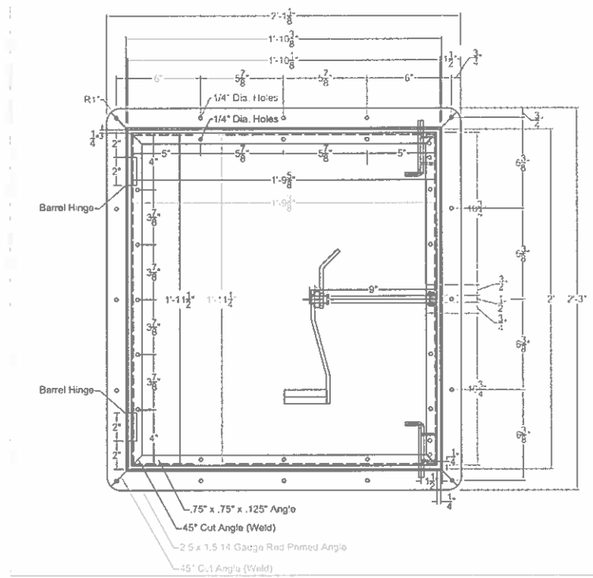

ROOF HATCH

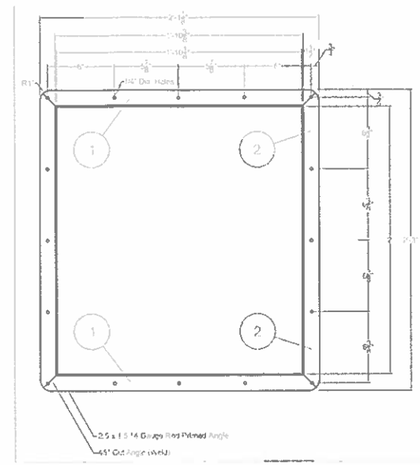

OUTER FRAME

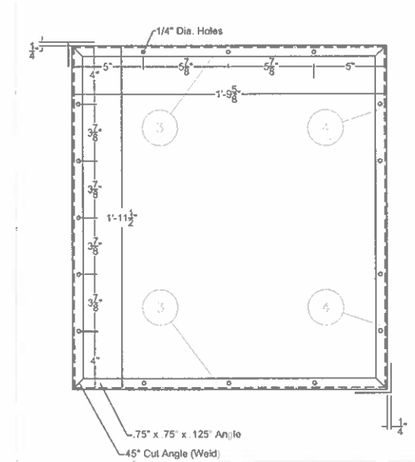

INNER FRAME

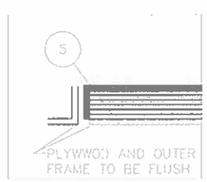

PLYWOOD

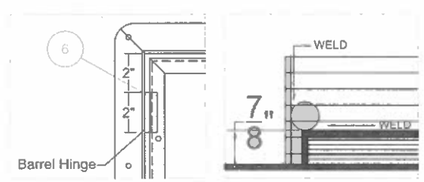

BARREL HINGES

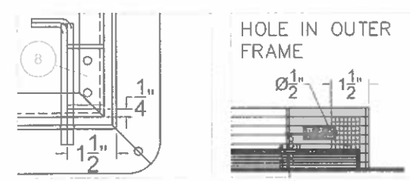

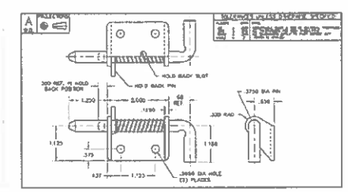

SLIDE LATCH WITH HOLDBACK

NO	REVISION	BY	DATE
0	ISSUED FOR CONSTRUCTION	DLY	05/01/11

DESIGN	PK	04/21/11
DRAWN	DLY	04/21/11
CHECKED	PK	04/21/11
APPVD	PK	04/21/11

HIGH TIDE
ESCAPE HATCH

ROOF HATCH
BILL OF MATERIAL

ROOF HATCH 01

SCALE NONE

SHEET 1 OF 4

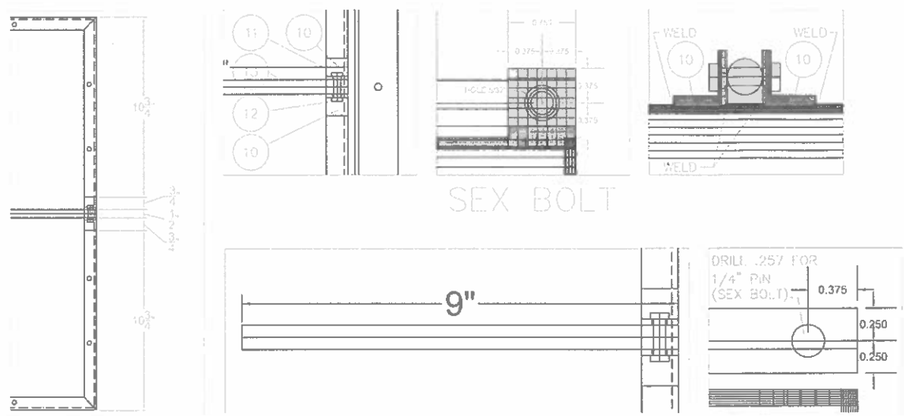

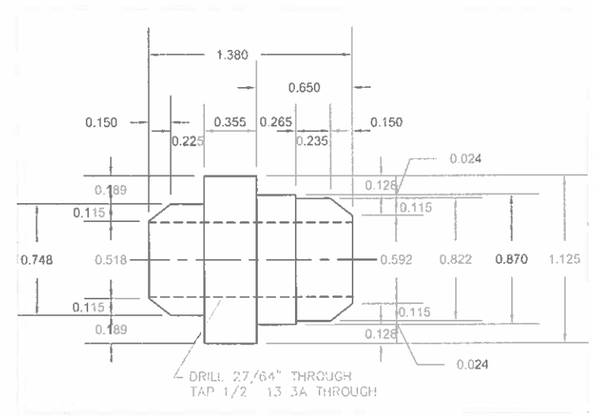

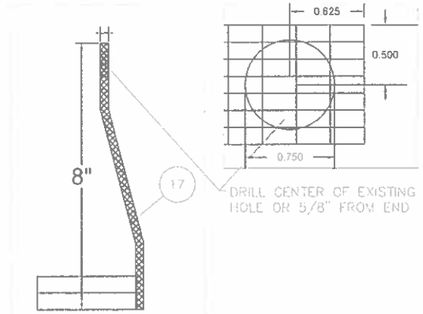

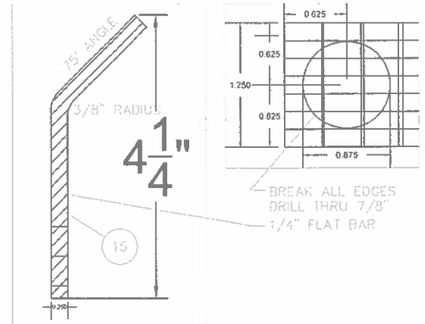

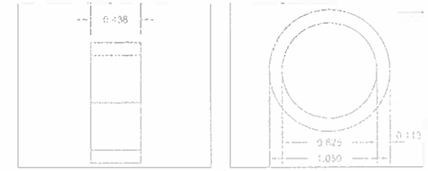

NO	REVISION	BY	DATE
0	ISSUED FOR CONSTRUCTION	DLY	05/01/11

DESIGN	PK	04/21/11
DRAWN	DLY	04/21/11
CHECKED	PK	04/21/11
APPVD	PK	04/21/11

HIGH TIDE HAL ESCAPE HATCHES

ROOF HATCH
BILL OF MATERIAL

ROOF HATCH 02

SCALE NONE

SHEET 2 OF 4

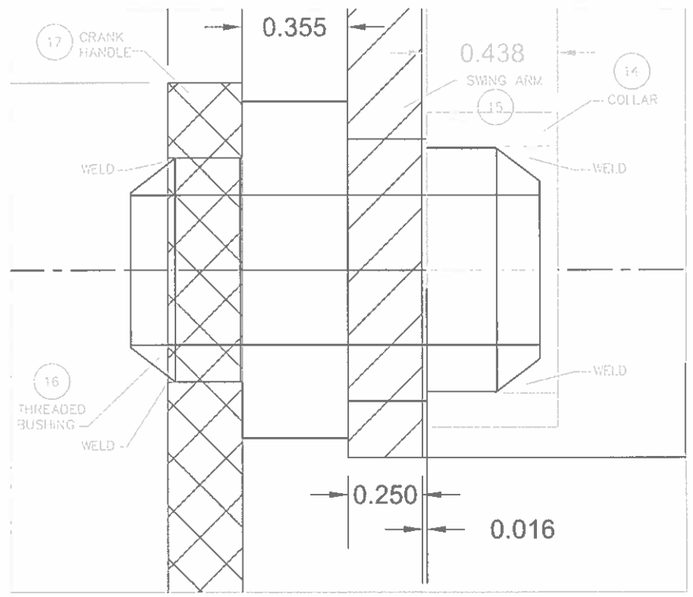

THREADED BUSHING

NO	REVISION	BY	DATE
0	ISSUED FOR CONSTRUCTION	DLY	05/01/11

DESIGN	PK	04/21/11
DRAWN	DLY	04/21/11
CHECKED	PK	04/21/11
APPVD	PK	04/21/11

HIGH TIDE CAPE HATCH

ROOF HATCH
BILL OF MATERIAL

ROOF HATCH 03

SCALE NONE

SHEET 3 OF 4

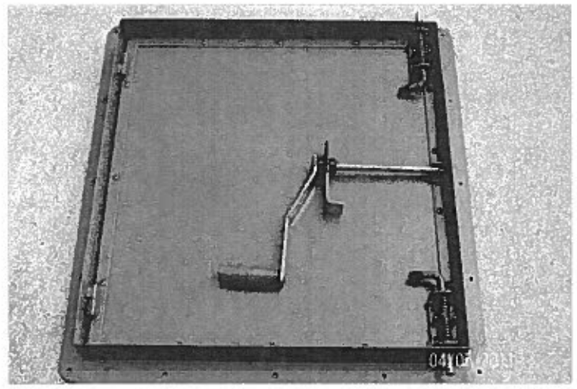

CLOSED HATCH FIGURE 1

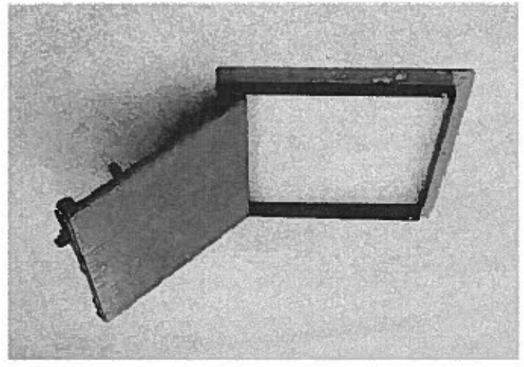

OPEN HATCH FIGURE 2

BILL OF MATERIAL

ITEM	QTY	SIZE	DESCRIPTION
			OUTER FRAME
1	2	2' 1-1/8"	2.5 X 1.5 14 GAUGE ANGLE (METAL MART ITEM 76121)
2	2	2' 3"	2.5 X 1.5 14 GAUGE ANGLE (METAL MART ITEM 76121)
			INNER FRAME
3	2	1' 9-5/8"	1/8" X 3/4" X 3/4" STEEL ANGLE
4	2	1' 11-1/2"	1/8" X 3/4" X 3/4" STEEL ANGLE
5	1	3/4"	1' 9-3/8" X 1' 11-1/4" CDX GRADE PLYWOOD
6	15	3/4"	PAN HEAD SHEET METAL SCREWS (HILLMAN ITEM 41084)
7	2	2" X 5/8"	BARREL HINGES (KING ARCHITECTURAL METALS ITEM 44-2020)
8	1	2"	LEFT SLIDE LATCH WITH HOLDBACK (HINGES & HARWARE, INC. PART 22NSBLH-HB)
9	1	2"	RIGHT SLIDE LATCH WITH HOLDBACK (HINGES & HARWARE, INC. PART 22NSBLRH-HB)
10	2	3/4"	1/8" X 3/4" X 3/4" STEEL ANGLE
11	1	1/4"X3/4"	COMBO HEAD SEX BOLT, STEEL ZINK (ACCURATE MFG. ITEM Z4412)
12	1	10-24X5/16"	COMBO HEAD MALE HEAD SCREW (ACCURATE MFG. ITEM Z4085)
13	1	9"	1/2" ALL THREAD 13 TO 1" ZINK
14	1	7/16"	.625 ID X 1.050 OD COLLAR (MACHINE THIS PART)
15	1	4'-3/16"	1/4" X 1 1/4" FLAT BAR (SWING ARM)
16	1	1.375"	1.375" X 1.125 THREADED BUSHING (MACHINE THIS PART)
17	1	7"	CRANK HANDLE (PART NUMBER XXXXXX)
18	1		OSHA RED PAINT

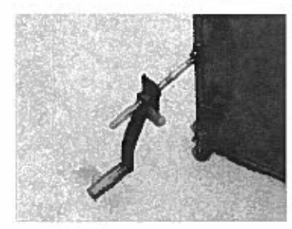

CRANK HANDLE FIGURE 3

CRANK HANDLE FIGURE 4

NO	REVISION	BY	DATE
0	ISSUED FOR CONSTRUCTION	DLY	05/01/11

DESIGN	PK	04/21/11
DRAWN	DLY	04/21/11
CHECKED	PK	04/21/11
APPVD	PK	04/21/11

HIGH TIDE ESCAPE HATCH

ROOF HATCH
BILL OF MATERIAL

ROOF HATCH 04

SCALE NONE

SHEET 4 OF 4