REVISIONS			
REV	DESCRIPTION	DATE	APPROVED
A	ADDED COMPONENT DETAILS	10/02/14	R.L.

NOTES:

1. THE PRODUCT SHOWN HEREIN IS DESIGNED AND MANUFACTURED TO COMPLY WITH REQUIREMENTS OF THE 2006 INTERNATIONAL BUILDING CODE AND THE 2006 INTERNATIONAL RESIDENTIAL CODE WITH STATE OF TEXAS MODIFICATIONS.
2. WOOD FRAMING TO BE DESIGNED AND ANCHORED TO PROPERLY TRANSFER ALL LOADS TO STRUCTURE. FRAMING IS THE RESPONSIBILITY OF THE ARCHITECT OR ENGINEER OF RECORD.
3. 1X BUCK OVER MASONRY/CONCRETE IS OPTIONAL. WHERE 1X BUCK IS NOT USED DISSIMILAR MATERIALS MUST BE SEPARATED WITH APPROVED COATING OR MEMBRANE. SELECTION OF COATING OR MEMBRANE IS THE RESPONSIBILITY OF THE ARCHITECT OR ENGINEER OF RECORD.
4. ALLOWABLE STRESS INCREASE OF 1/3 WAS NOT USED IN THE DESIGN OF THE PRODUCT SHOWN HEREIN. WIND LOAD DURATION FACTOR Cd=1.6 WAS USED FOR WOOD ANCHOR CALCULATIONS.
5. APPROVED IMPACT PROTECTIVE SYSTEM IS NOT REQUIRED FOR THIS PRODUCT IN WIND BORNE DEBRIS REGIONS UP TO WIND ZONE 3.
6. DESIGN PRESSURE AND INSTALLATION DETAILS SHOWN IN THIS DOCUMENT APPLY ONLY TO MULLION. WINDOWS MUST BE APPROVED UNDER SEPARATE APPROVAL.
7. SINGLE WINDOWS TO BE MULLED ARE NOT LIMITED TO THOSE SHOWN IN THIS DRAWING. WINDOWS MUST BE MANUFACTURED BY WINDOW MART.
8. DESIGN PRESSURE OF MULLED UNIT SHALL BE CONTROLLED BY THE LESSER DESIGN PRESSURE OF THE MULLION OR THE INDIVIDUAL WINDOW OR DOOR UNIT.
9. UNITS MAY BE MULLED TOGETHER INDEFINITELY AS LONG AS SINGLE UNIT WIDTH AND HEIGHT ARE NOT EXCEEDED AND MULLION IS ANCHORED AS SHOWN HEREIN.
10. MULLION VERTICAL INSTALLATION IS SHOWN, MULLION MAY BE USED IN HORIZONTAL APPLICATIONS AS LONG AS DIMENSIONS INDICATED HEREIN ARE NOT EXCEEDED AND MULLION IS ANCHORED ACCORDING TO THIS DOCUMENT.

ANCHORING NOTES:

1. FOR ANCHORING INTO WOOD FRAMING OR 2X BUCK USE #10 WOOD SCREW WITH SUFFICIENT LENGTH TO ACHIEVE A 1 3/8" MINIMUM EMBEDMENT. LOCATE ANCHORS AS SHOWN IN INSTALLATION DETAILS SHEET 3.
2. FOR ANCHORING INTO CONCRETE USE 3/16" TAPCON WITH SUFFICIENT LENGTH TO ACHIEVE A 1 3/4" MINIMUM EMBEDMENT WITH 2 1/2" MINIMUM EDGE DISTANCE. LOCATE ANCHORS AS SHOWN IN INSTALLATION DETAILS SHEET 4.
3. FOR ANCHORING INTO METAL STRUCTURE USE #10 SMS OR SELF DRILLING SCREWS WITH SUFFICIENT LENGTH TO ACHIEVE 3 THREADS MINIMUM BEYOND STRUCTURE INTERIOR WALL. LOCATE ANCHORS AS SHOWN IN ELEVATIONS AND INSTALLATION DETAILS.
4. FOR ATTACHING REINFORCEMENTS TO WINDOW UNITS USE #6 SELF DRILLING SCREWS WITH SUFFICIENT LENGTH TO ACHIEVE A MINIMUM EMBEDMENT OF THREE THREADS PAST THE WINDOW FRAME WALL. LOCATE SCREWS IN ACCORDANCE WITH WINDOW ANCHORING SCHEDULE AS SHOWN IN WINDOW SEPARATE APPROVAL.
5. ALL FASTENERS TO BE CORROSION RESISTANT.
6. INSTALLATION ANCHORS SHALL BE INSTALLED IN ACCORDANCE WITH ANCHOR MANUFACTURER'S INSTALLATION INSTRUCTIONS, AND ANCHORS SHALL NOT BE USED IN SUBSTRATES WITH STRENGTHS LESS THAN THE MINIMUM STRENGTH SPECIFIED BELOW:
   A. WOOD – MINIMUM SPECIFIC GRAVITY OF G=0.42
   B. CONCRETE – MINIMUM COMPRESSIVE STRENGTH OF 3,200 PSI.
   C. MASONRY – STRENGTH CONFORMANCE TO ASTM C–90, GRADE N, TYPE 1 (OR GREATER).
   D. METAL STRUCTURE: STEEL 18GA, 33KSI OR ALUMINUM 6063–T5 1/8" THICK MINIMUM

SIGNED: 10/13/2014

TABLE OF CONTENTS

SHEET NO.	DESCRIPTION
1	NOTES
2	CONFIGURATIONS AND CHART
3 – 6	INSTALLATION DETAILS

WINDOW MART
5760 ALBERT PIKE
ROYAL, AR 71968

VERTICAL MULLION – IMPACT
(2) 1/4"x3/4" ALUMINUM REINFORCEMENTS
NOTES

DRAWN:	DWG NO.	REV
V.L.	08–02231	A
SCALE NTS	DATE 09/23/13	SHEET 1 OF 6

STATE OF TEXAS
LUIS R. LOMAS
101889
LICENSED
PROFESSIONAL ENGINEER

Luis R. Lomas P.E.
Texas No. 101889

REVISIONS			
REV	DESCRIPTION	DATE	APPROVED
A	ADDED COMPONENT DETAILS	10/02/14	R.L.

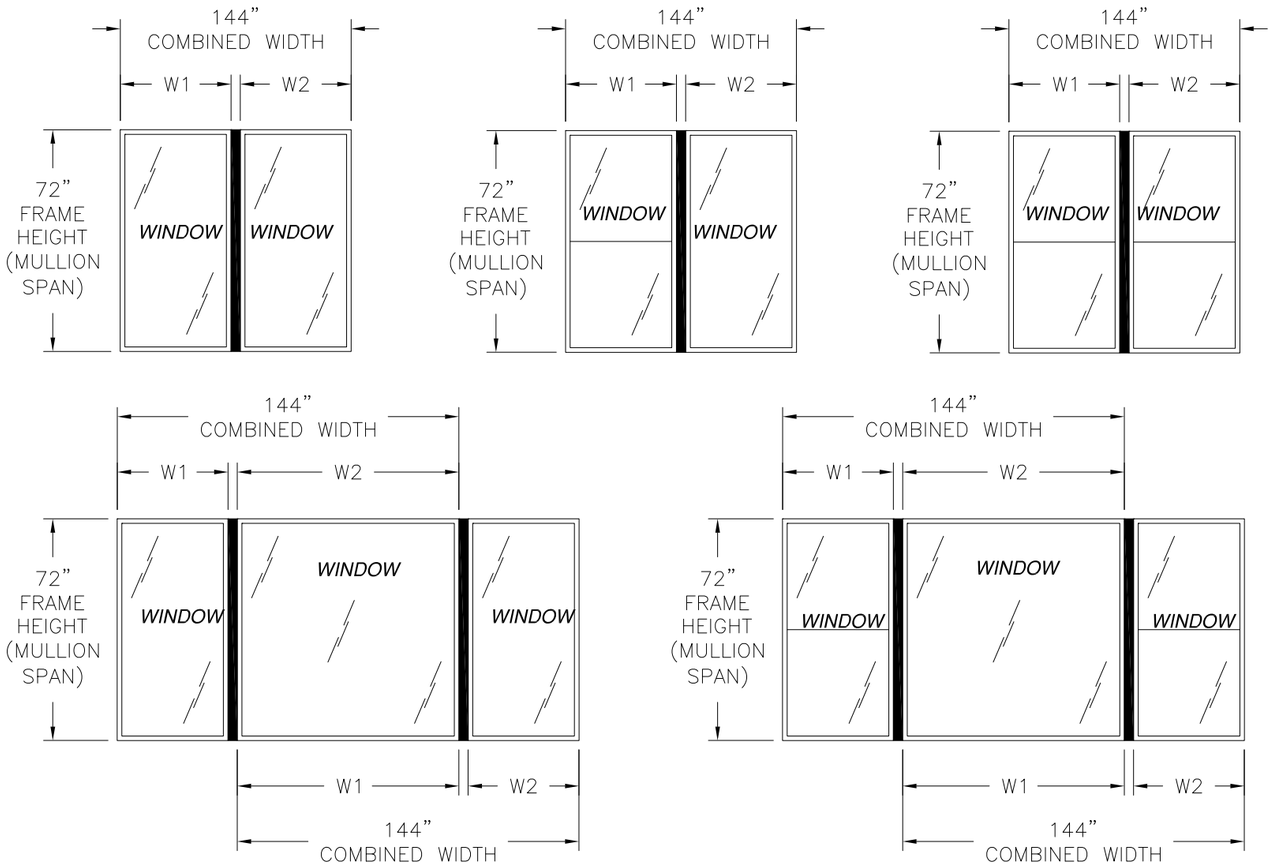

CHART #1

Design pressure rating (psf)								
Mullion span (in)	Tributary width (in)							
	30.00	36.00	42.00	48.00	54.00	60.00	66.00	72.00
24.00	75.0	75.0	75.0	75.0	75.0	75.0	75.0	75.0
30.00	75.0	75.0	75.0	75.0	75.0	75.0	75.0	75.0
36.00	75.0	75.0	75.0	75.0	75.0	75.0	75.0	75.0
42.00	75.0	75.0	75.0	75.0	75.0	75.0	75.0	75.0
48.00	75.0	75.0	75.0	75.0	75.0	75.0	75.0	75.0
54.00	75.0	75.0	73.2	69.8	68.7	68.7	68.7	68.7
60.00	63.9	55.8	50.7	47.4	45.6	45.1	45.1	45.1
66.00	47.2	40.8	36.7	33.9	32.1	31.1	30.8	30.8
72.00	35.8	30.8	27.5	25.1	23.6	22.5	21.9	21.7

LARGE AND SMALL MISSILE IMPACT, WIND ZONE 3

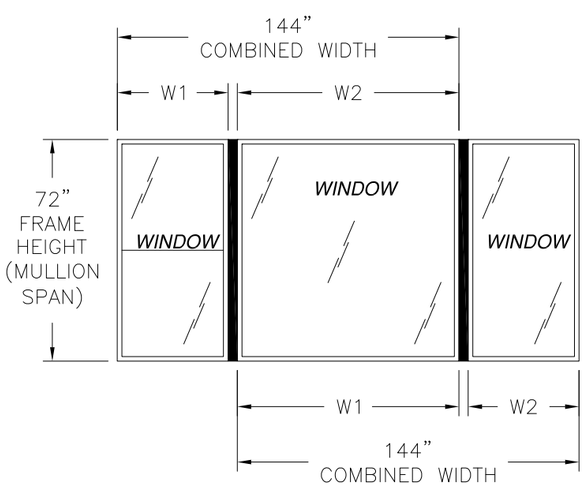

APPROVED CONFIGURATIONS

SEE CHART #1 FOR RATINGS

DESIGN PRESSURE TABLE INSTRUCTIONS:

1. DEFINE REQUIRED DESIGN LOAD PER CHAPTER 16 OF THE 2006 IBC OR SECTION R301.2.1 OF THE 2006 IRC.
2. DETERMINE TRIBUTARY WIDTH AND MULLION SPAN BASED ON PRODUCT TO BE INSTALLED. SEE FORMULA FOR TRIBUTARY WIDTH.
3. LOCATE MULLION SPAN (UNIT HEIGHT) AND TRIBUTARY WIDTH. AT THE INTERSECTION OF ROW AND COLUMN CONTAINING THE MULLION SPAN AND TRIBUTARY WIDTH RESPECTIVELY IS THE MULLION RATING FOR PRODUCT IN STEP 2. MULLION RATING MUST BE EQUAL OR GREATER THAN REQUIRED DESIGN PRESSURE OBTAINED IN STEP 1.

$$\text{TRIBUTARY WIDTH} = \frac{W1 + W2}{2}$$

SIGNED: 10/13/2014

WINDOW MART
5760 ALBERT PIKE
ROYAL, AR 71968

VERTICAL MULLION – IMPACT
(2) 1/4"x3/4" ALUMINUM REINFORCEMENTS
CONFIGURATIONS & CHART

DRAWN: V.L.	DWG NO. 08-02231	REV A
SCALE NTS	DATE 09/23/13	SHEET 2 OF 6

STATE OF TEXAS
LUIS R. LOMAS
101889
LICENSED
PROFESSIONAL ENGINEER

Luis R. Lomas P.E.
Texas No. 101889

REVISIONS			
REV	DESCRIPTION	DATE	APPROVED
A	ADDED COMPONENT DETAILS	10/02/14	R.L.

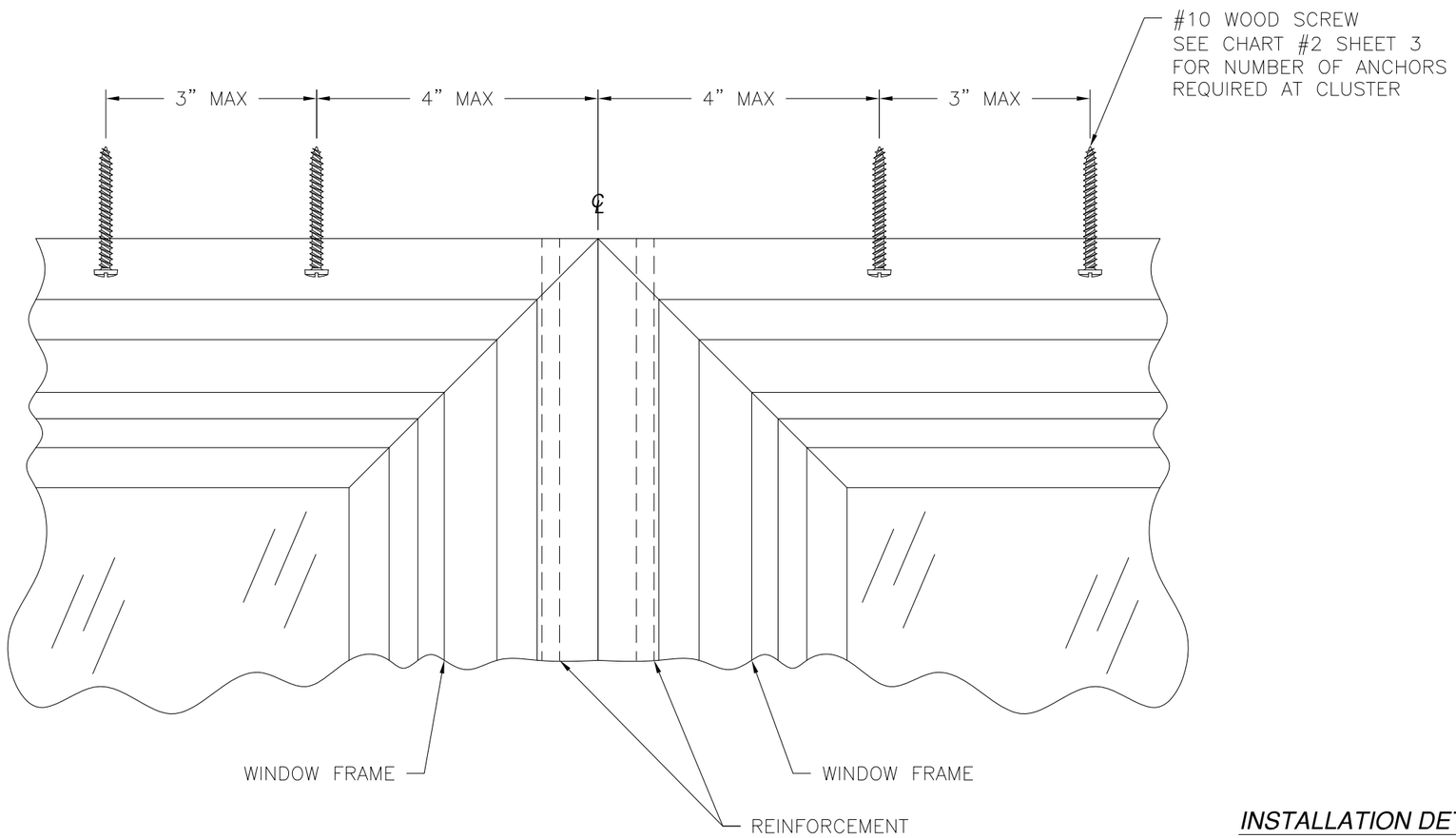

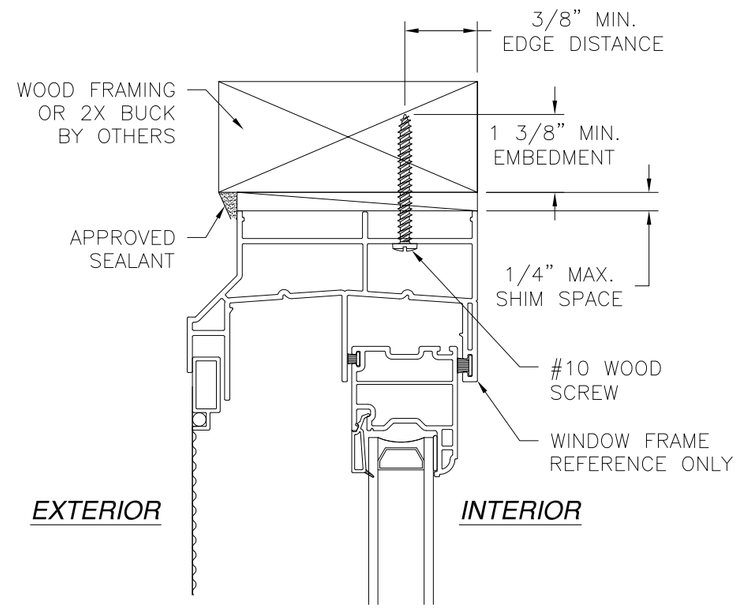

INSTALLATION DETAIL
WOOD FRAMING OR 2X BUCK

CHART #2

Number of anchors required at cluster								
Mullion span (in)	Tributary width (in)							
	30.00	36.00	42.00	48.00	54.00	60.00	66.00	72.00
24.00	2	2	2	2	2	2	2	2
30.00	2	2	2	2	2	2	2	2
36.00	2	4	4	4	4	4	4	4
42.00	4	4	4	4	4	4	4	4
48.00	4	4	4	4	4	4	4	4
54.00	4	6	6	6	6	6	6	6
60.00	4	4	4	4	4	4	4	4
66.00	4	4	4	4	4	4	4	4
72.00	4	4	4	4	4	4	4	4

SIGNED: 10/13/2014

WINDOW MART
5760 ALBERT PIKE
ROYAL, AR 71968

VERTICAL MULLION – IMPACT
(2) 1/4"x3/4" ALUMINUM REINFORCEMENTS
INSTALLATION DETAILS

DRAWN:	DWG NO.	REV
V.L.	08-02231	A
SCALE NTS	DATE 09/23/13	SHEET 3 OF 6

Luis R. Lomas P.E.
Texas No. 101889

REVISIONS			
REV	DESCRIPTION	DATE	APPROVED
A	ADDED COMPONENT DETAILS	10/02/14	R.L.

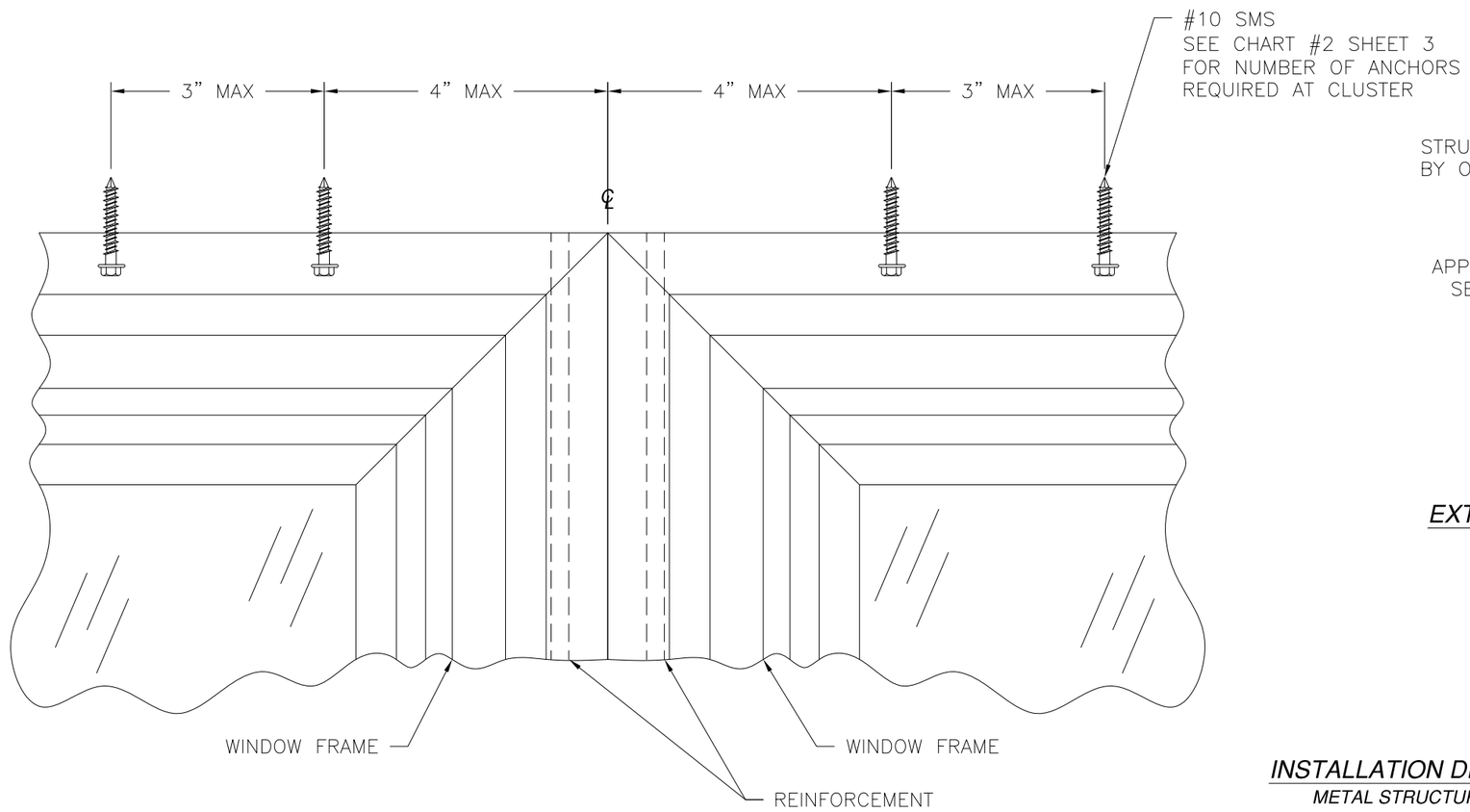

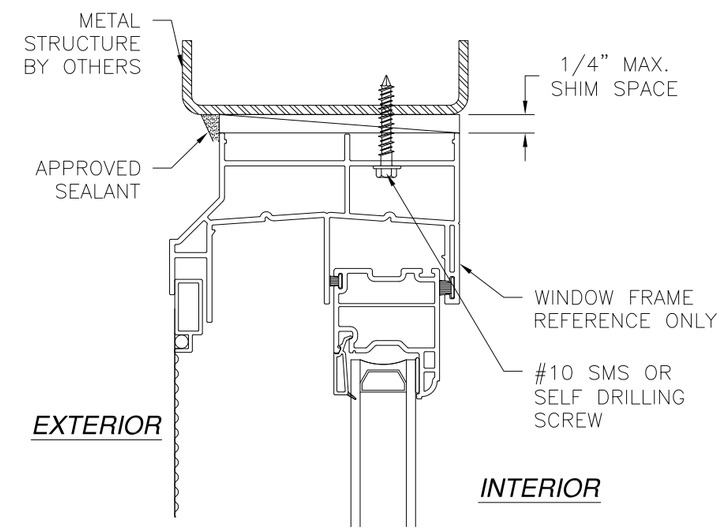

INSTALLATION DETAIL
METAL STRUCTURE

SIGNED: 10/13/2014

WINDOW MART
5760 ALBERT PIKE
ROYAL, AR 71968

VERTICAL MULLION – IMPACT
(2) 1/4"x3/4" ALUMINUM REINFORCEMENTS
INSTALLATION DETAILS

DRAWN:	DWG NO.	REV
V.L.	08-02231	A

SCALE	DATE	SHEET
NTS	09/23/13	4 OF 6

Luis R. Lomas P.E.
Texas No. 101889

REVISIONS			
REV	DESCRIPTION	DATE	APPROVED
A	ADDED COMPONENT DETAILS	10/02/14	R.L.

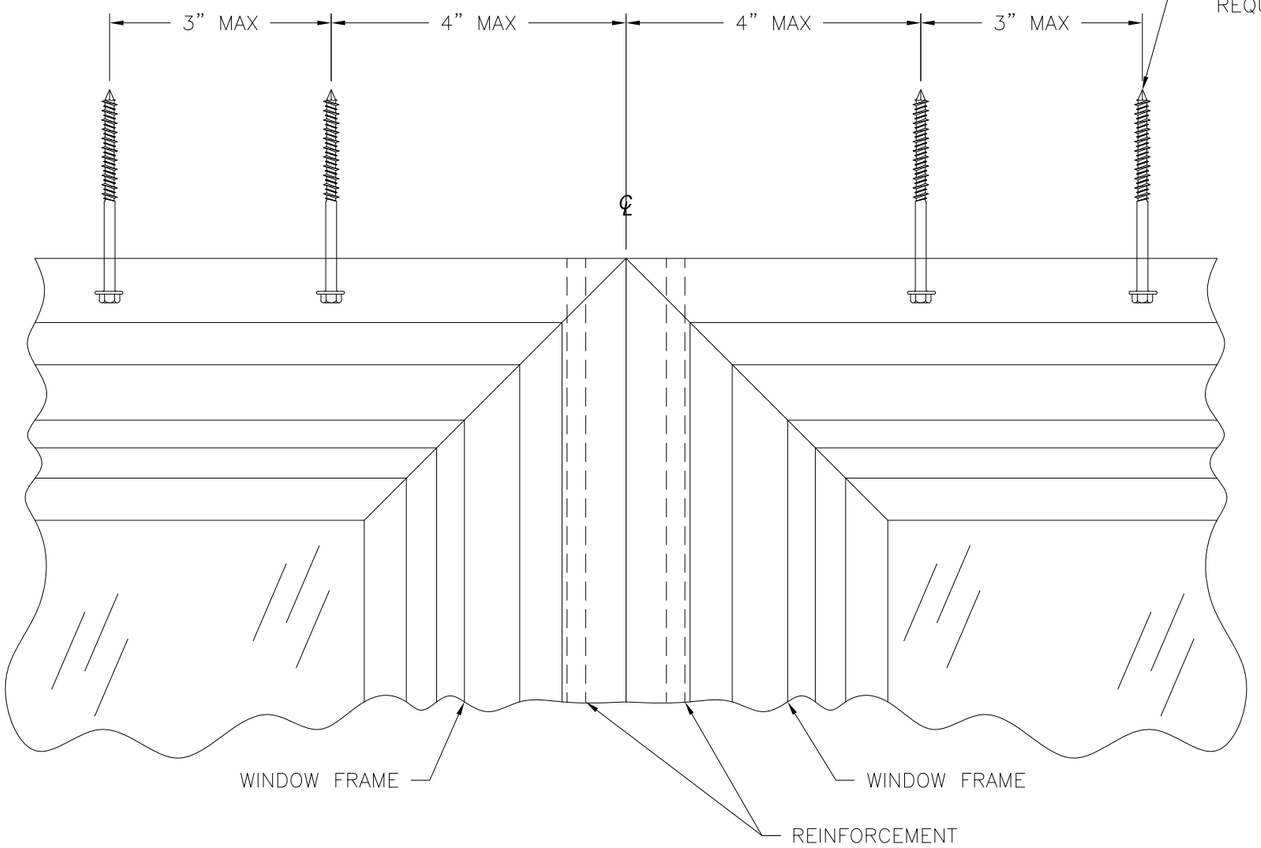

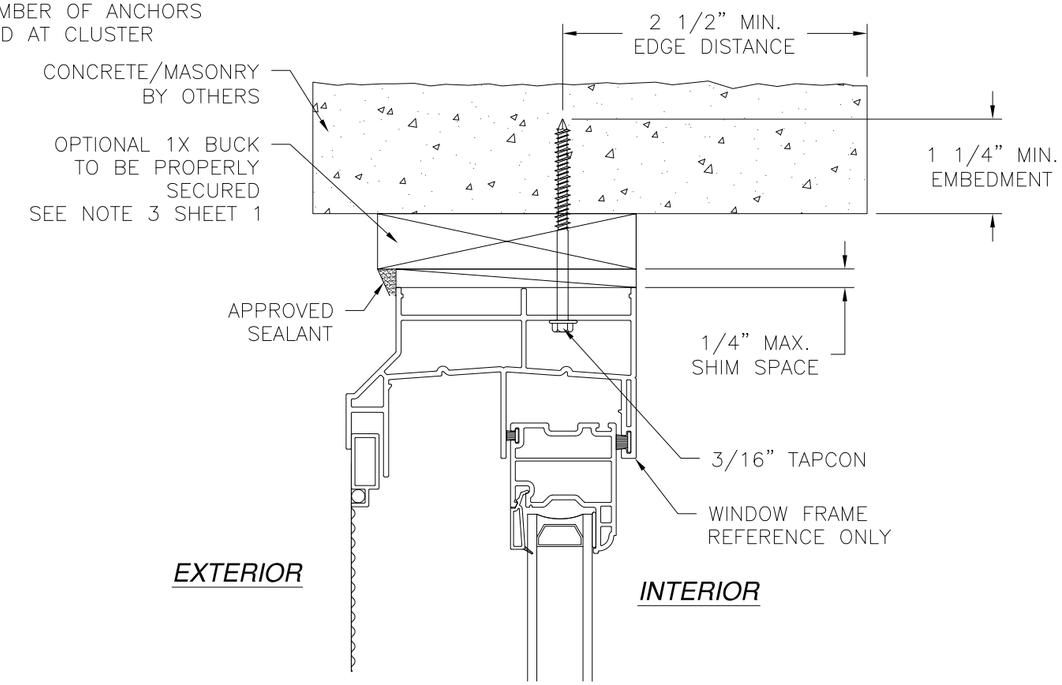

INSTALLATION DETAIL
CONCRETE/MASONRY

SIGNED: 10/13/2014

WINDOW MART
5760 ALBERT PIKE
ROYAL, AR 71968

VERTICAL MULLION – IMPACT
(2) 1/4"x3/4" ALUMINUM REINFORCEMENTS
INSTALLATION DETAILS

DRAWN:	DWG NO.	REV
V.L.	08–02231	A
SCALE NTS	DATE 09/23/13	SHEET 5 OF 6

STATE OF TEXAS
LUIS R. LOMAS
101889
LICENSED
PROFESSIONAL ENGINEER

Luis R. Lomas P.E.
Texas No. 101889

REVISIONS			
REV	DESCRIPTION	DATE	APPROVED
A	ADDED COMPONENT DETAILS	10/02/14	R.L.

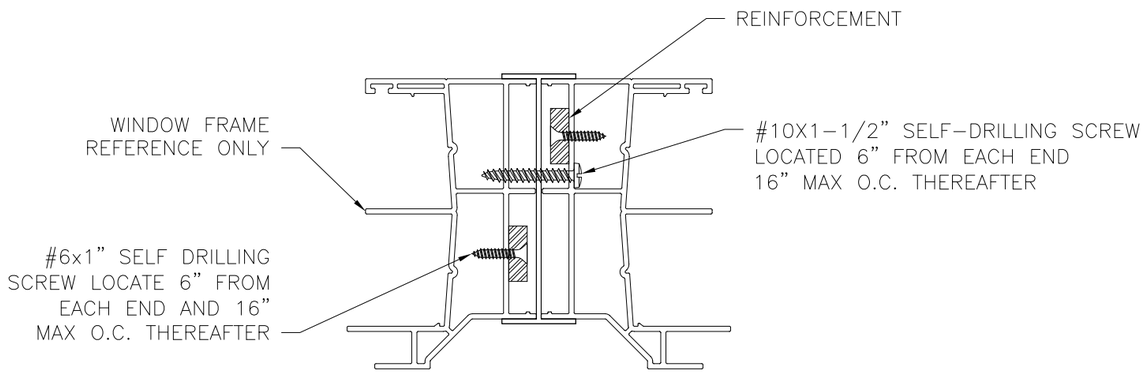

WINDOW FRAME TO
REINFORCEMENT INSTALLATION

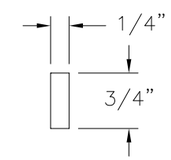

REINFORCEMENT
ALUMINUM 6105-T5

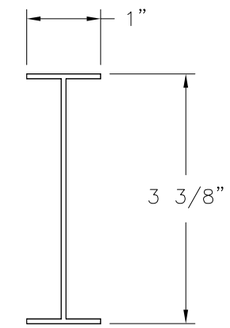

H MULL
VINYL PVC .065" THICK

SIGNED: 10/13/2014

WINDOW MART
5760 ALBERT PIKE
ROYAL, AR 71968

VERTICAL MULLION – IMPACT
(2) 1/4"x3/4" ALUMINUM REINFORCEMENTS
INSTALLATION DETAILS

DRAWN:	DWG NO.	REV
V.L.	08-02231	A
SCALE NTS	DATE 09/23/13	SHEET 6 OF 6

Luis R. Lomas P.E.
Texas No. 101889