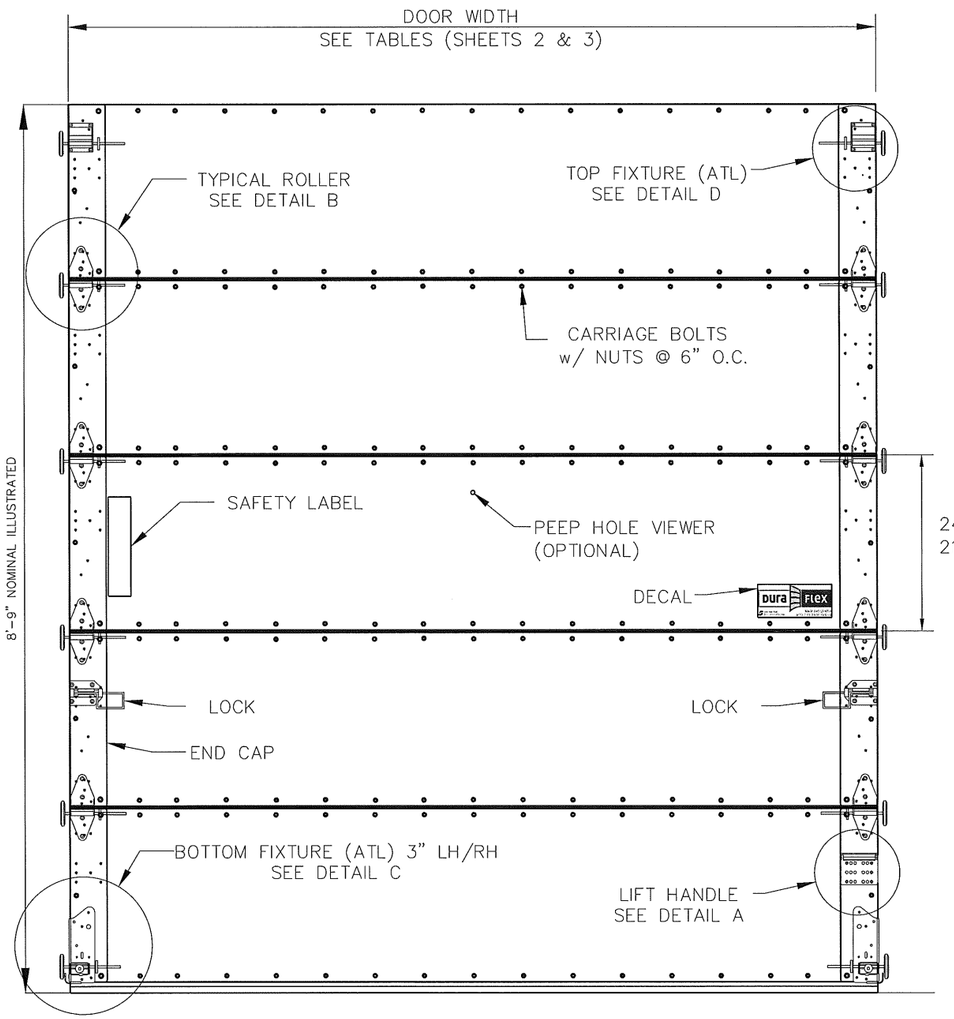

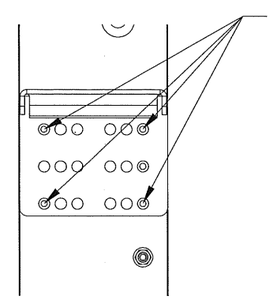

DETAIL A
LIFT HANDLE

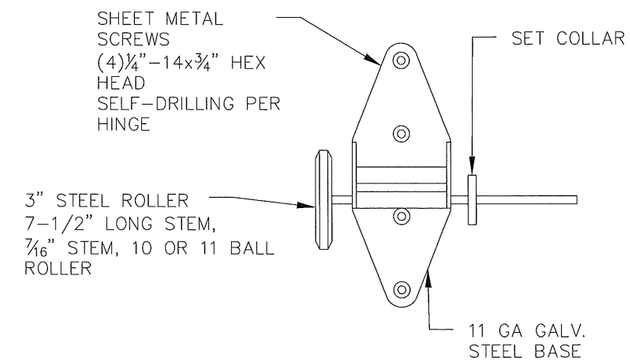

DETAIL B
END HINGE

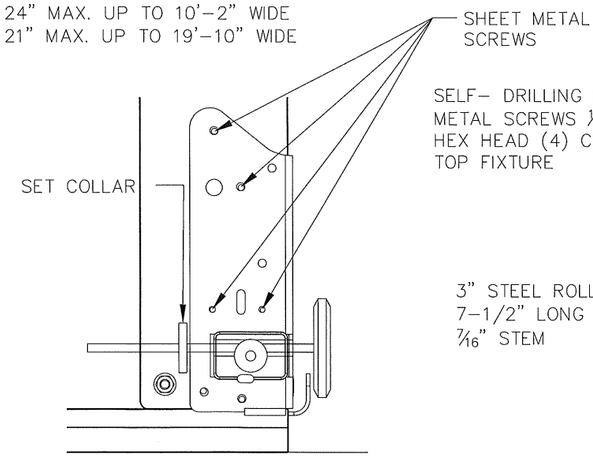

DETAIL C
BOTTOM FIXTURE

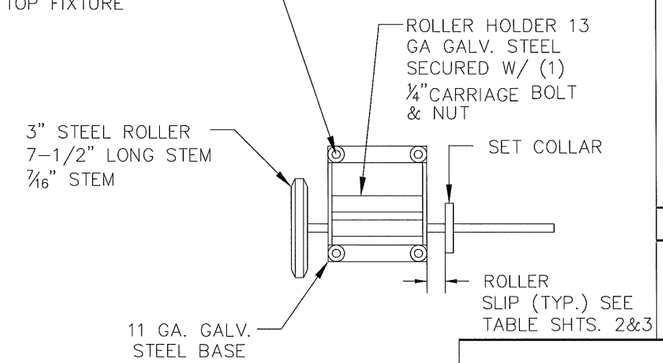

DETAIL D
TOP FIXTURE

DuraFlex
2951 Northern Cross
Blvd # 213
Fort Worth, TX 76137
Office 1-800-994-2096

DURAFLEX SECTIONAL OVERHEAD DOOR, WINDLOAD RATING

DATE: 03-24-14

SHEET 1 OF 3

THIS PRODUCT HAS BEEN
EVALUATED PER ANSI/DASMA
108-05 (AND 108-12) AND
ASTM E-330-02

PROFESSIONAL ENGINEER'S
SEAL PROVIDED ONLY FOR
VERIFICATION OF WINDLOAD
CONSTRUCTION DETAILS

John E. Scates 11/12/14
JOHN E. SCATES, PE
FL PE. #51737
TX PE #56308/F-2203
3121 FAIRGATE, 75007

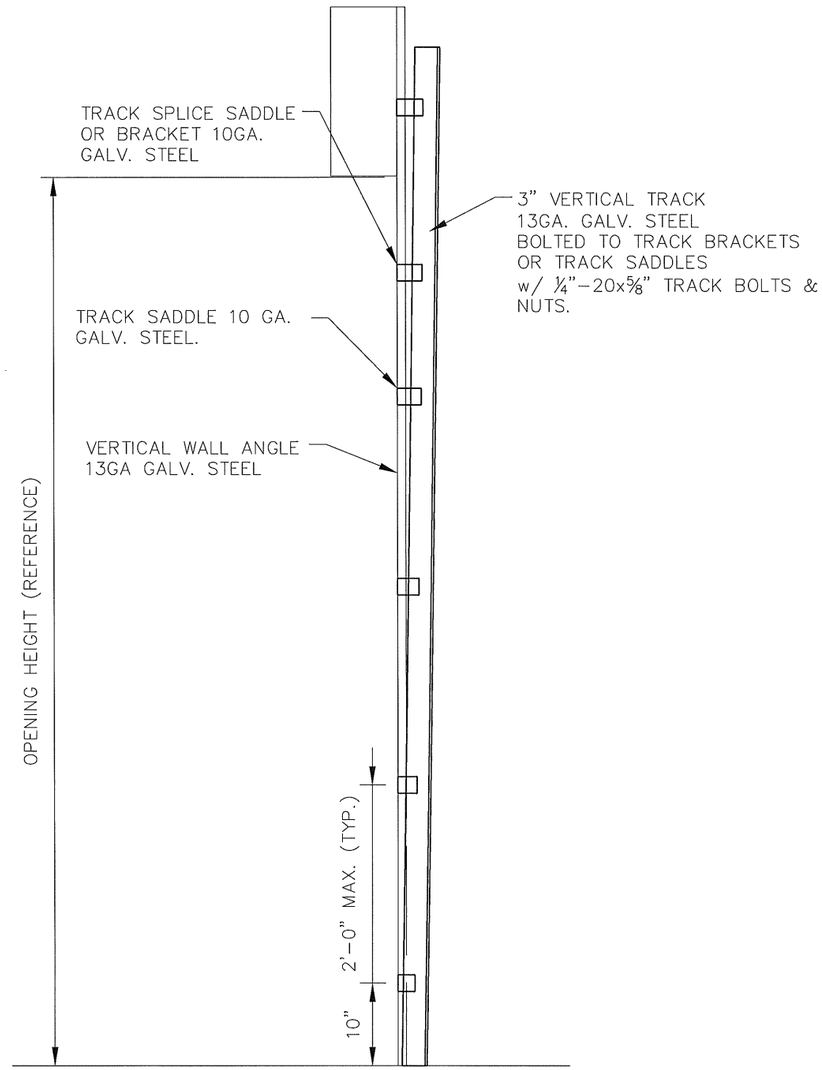

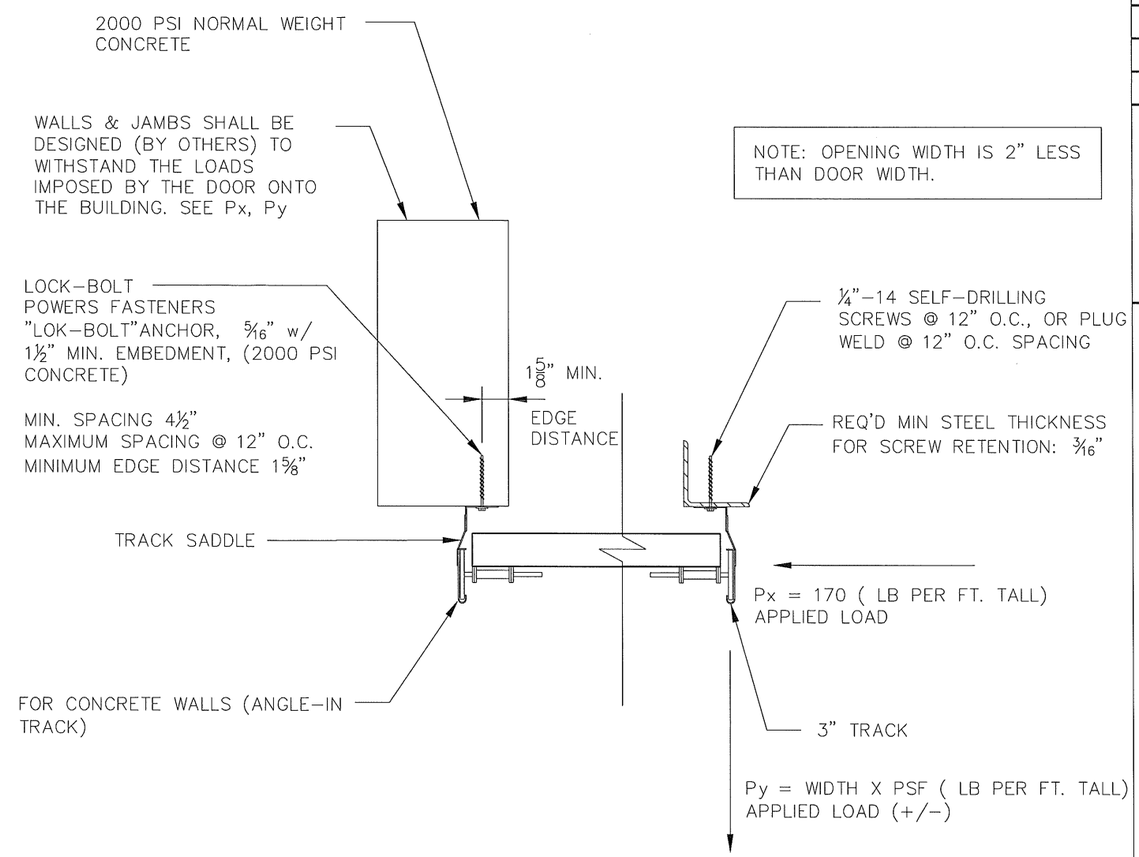

DuraFlex
2951 Northern Cross Blvd # 213
Fort Worth, TX 76137
Office 1-800-994-2096

DURAFLEX SECTIONAL OVERHEAD DOOR, WINDLOAD RATING

DATE: 03-24-14

SHEET 2 OF 3

TABLE #1: DESIGN WIND LOAD & FEATURES

DOORS WITH 1" OVERLAP PER SIDE

DOOR WIDTH	5'-2"	6'-2"	7'-2"	8'-2"	9'-2"	10'-2"	11'-2"	12'-2"	13'-2"	14'-2"	15'-2"	16'-2"
(+) PSF DESIGN	82.9	69.5	59.8	52.5	41.6	33.8	32.0	21.3	19.7	18.3	17.1	16.0
(-) PSF DESIGN	-92.7	-77.6	-66.8	-58.6	-46.5	-37.8	-35.8	-23.9	-22.1	-20.5	-19.2	-18.0
ROLLER	STANDARD	STANDARD	STANDARD	STANDARD	STANDARD	STANDARD	HIGH STR	HIGH STR	HIGH STR	HIGH STR	HIGH STR	HIGH STR
MODEL #	300-25101	300-25101	300-25101	300-25101	300-25101	300-25101	300-25108	300-25108	300-25108	300-25108	300-25108	300-25108
ROLLER SLIP	1/2	1/2	1/2	1/2	1/2	3/4	3/4	3/4	3/4	3/4	3/4	3/4
FABRIC HINGE	NONE	NONE	NONE	NONE	NONE	NONE	3	3	3	3	3	3

NOTE: DOORS UP TO 10'-2" WIDE MAY USE "PUSH NUTS" IN LIEU OF "SET COLLARS"

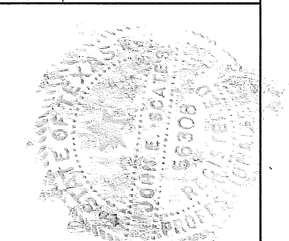

John E Scates 11/12/14
JOHN E. SCATES, PE
FL PE. #51737
TX PE #56308/F-2203
3121 FAIRGATE, 75007

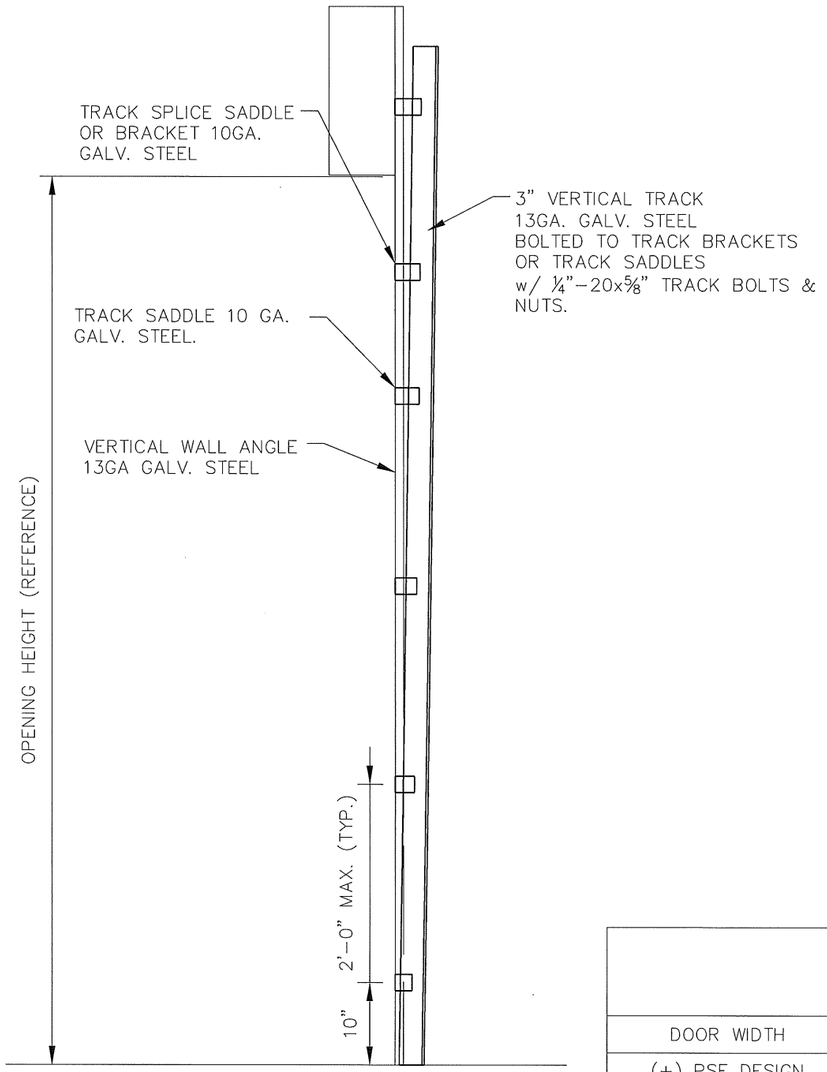

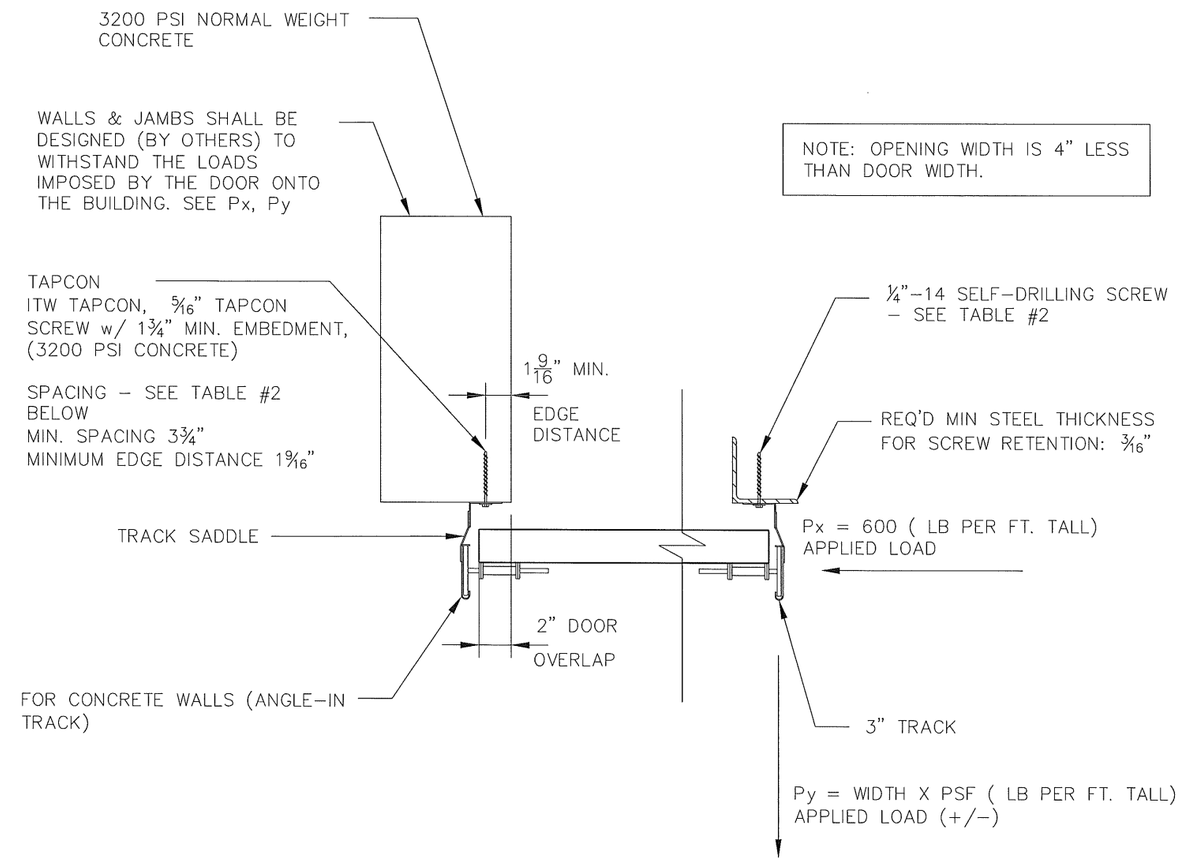

NOTE: OPENING WIDTH IS 4" LESS THAN DOOR WIDTH.

TABLE #2: DESIGN WIND LOAD & FEATURES

DOORS WITH 2" OVERLAP PER SIDE

DOOR WIDTH	12'–2"	13'–2"	14'–2"	15'–2"	16'–2"	18'–2"	19'–10"
(+) PSF DESIGN	43.3	40.0	37.2	34.7	32.6	24.7	20.2
(–) PSF DESIGN	–49.8	–46.0	–42.7	–39.9	–37.5	–28.4	–23.3
ROLLER MODEL #	HIGH STR 300–25108	HIGH STR 300–25108	HIGH STR 300–25108	HIGH STR 300–25108	HIGH STR 300–25108	HIGH STR 300–25108	HIGH STR 300–25108
ROLLER SLIP	1–1/4	1–1/4	1–1/4	1–1/4	1–1/4	1–1/4	1–1/4
FABRIC HINGE	3	3	3	3	3	4	4
TAPCON MAX SPACING	12	12	9	7	7	7	7
STEEL SELF DRILL MAX SPACING	12	12	10	7	6	6	6
WELD TO STEEL MAX SPACING	12	12	10	7	6	6	6

DuraFlex
2951 Northern Cross Blvd # 213
Fort Worth, TX 76137
Office 1-800-994-2096

DURAFLEX SECTIONAL OVERHEAD DOOR, WINDLOAD RATING

DATE: 03–24–14

SHEET 3 OF 3

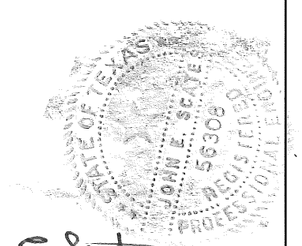

John E. Scates 11/12/14
JOHN E. SCATES, PE
FL PE. #51737
TX PE #56308/F–2203
3121 FAIRGATE, 75007