| REVISIONS | | | |
|---|---|---|---|
| REV | DESCRIPTION | DATE | APPROVAL |
| 1 | MODIFIED FOR TDI | 1-31-14 | BA |

MINIMUM HEADROOM DIMENSIONS

| OPENING HEIGHT | THRU 8'-0" | OVER 8'-0" THRU 10'-0" | OVER 10'-0" THRU 14'-0" | OVER 14'-0" THRU 16'-0" | OVER 16'-0" THRU 18'-0" | OVER 18'-0" THRU 20'-0" |
|---|---|---|---|---|---|---|
| VERTICAL HEADROOM | 18" | 20" | 21" | 22" | 23" | 24" |
| HORIZONTAL HEADROOM | 19" | 21" | 22" | 23" | 24" | 25" |

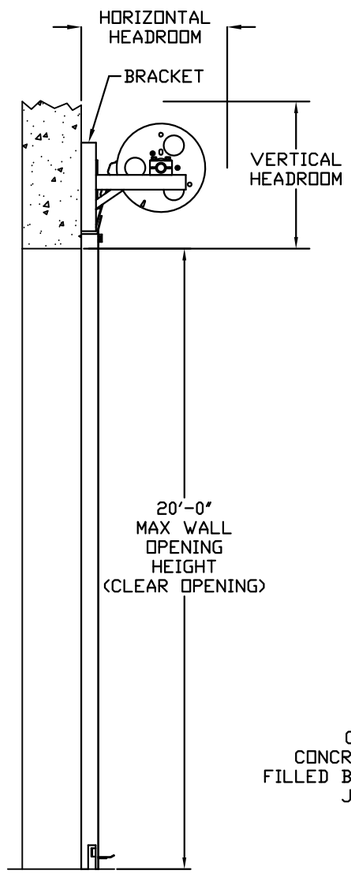


SIDE VIEW

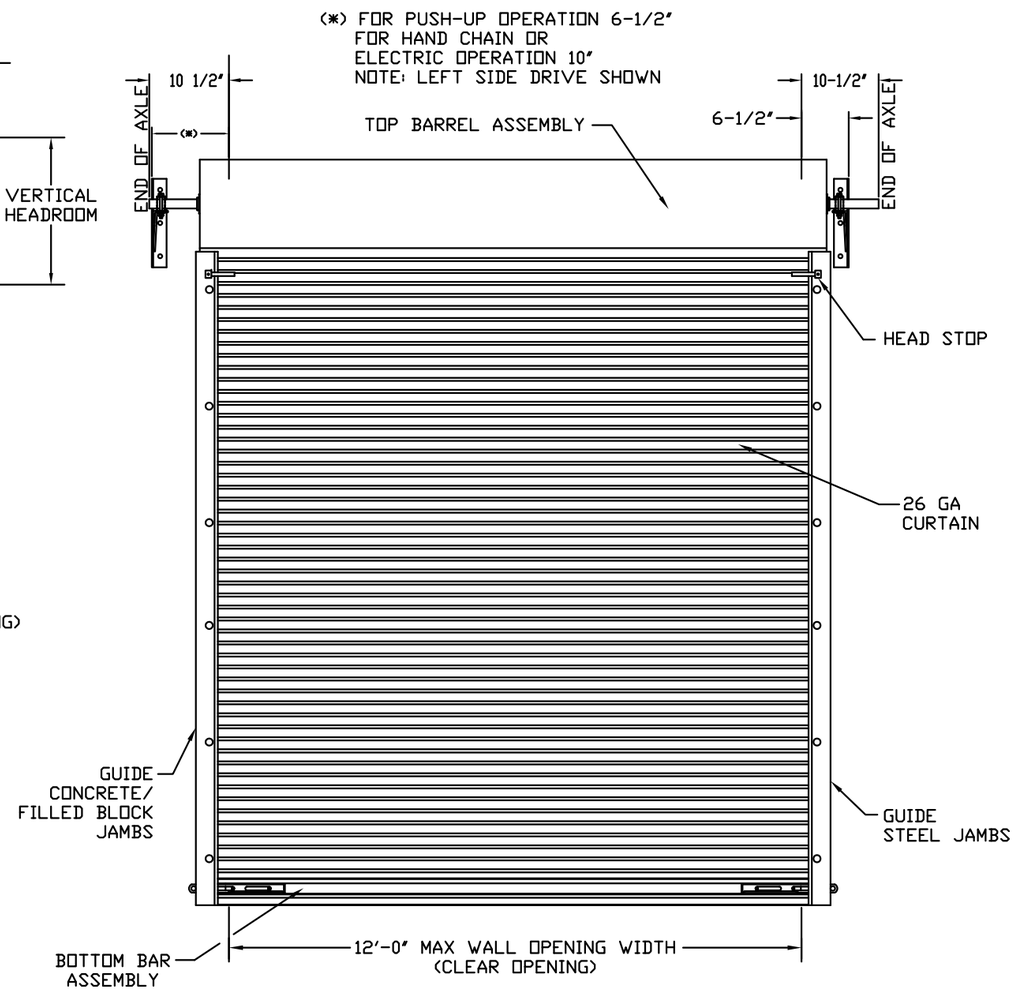


INSIDE ELEVATION

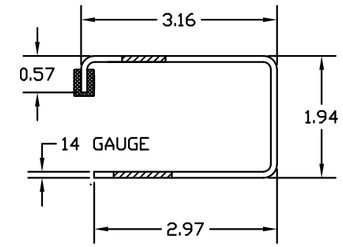


ASTM A653 G40 GALVANIZED
CS TYPE B

GUIDE DETAIL

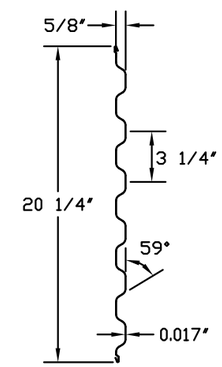


ASTM A653 SS GRADE 80
WITH FULL COAT OF PRIMER
AND BAKED POLYESTER FINISH COAT

TYPICAL PANEL (26 GA.) DETAIL

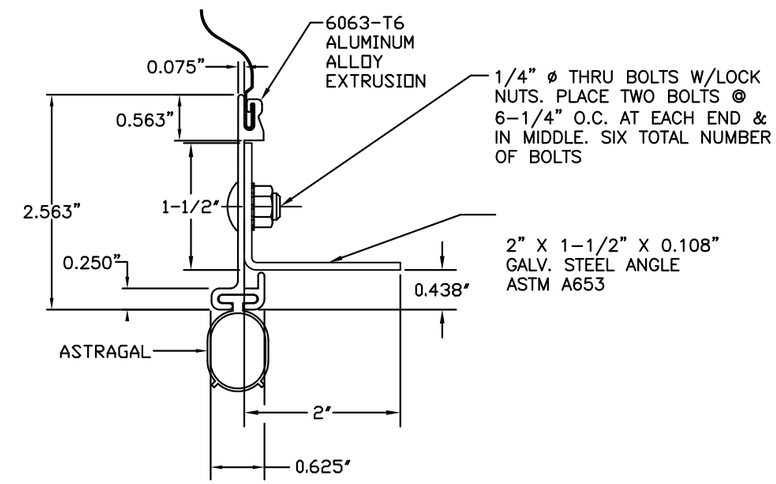


BOTTOM BAR ASSEMBLY
DETAIL

Digitally signed by John E. Scates, P.E.
Date: 2015.06.25 15:03:50 -05'00'


JOHN E. SCATES PE
3121 FAIRGATE
CARROLTON, TX 75007

FL PE 51737
TX PE 56308/F-2203



THESE CONFIDENTIAL DOCUMENTS SUBMITTED BY DBCI CONTAIN INFORMATION OF A PROPRIETARY NATURE AND MAY NOT BE REPRODUCED OR USED TO MANUFACTURE ANYTHING IN PART OR IN WHOLE FOR ANY PURPOSE OTHER THAN THAT WHICH IS NECESSARY FOR PREPARATION OF BIDS OR ENGINEERING WITHOUT THE EXPRESS PERMISSION OF DBCI WHICH MAY RECALL DOCUMENTS AT ANY TIME.


| | |
|---|---|
| PART NUMBER: | N/A |
| MATERIAL: | N/A |
| APPLIED FINISH: | N/A |
| UNIT OF MEASURE: | N/A |
| APPROVALS | DATE: |
| DRAWN BRAY ALLEN | 11/14/08 |
| CHECKED BRAY ALLEN | 11/14/08 |
| APPROVED | |

DBCI ®
DOORS & BUILDING COMPONENTS
DOUGLASVILLE, GA CHANDLER, AZ HOUSTON, TX
©2000 DBCI ALL RIGHTS RESERVED

26 GA. WIND LOAD, MAX. SIZE 12'-0" x 20'-0"

# SERIES 2400/2500 DOOR ASSEMBLY

| SIZE | DRAWING NUMBER | REV. |
|---|---|---|
| B | -2500-08-0001 | 1 |

SCALE: NONE | SHEET 1 OF 2

| REVISIONS | | | |
|---|---|---|---|
| REV | DESCRIPTION | DATE | APPROVAL |
| 1 | MODIFIED FOR TDI | 1-31-14 | BA |

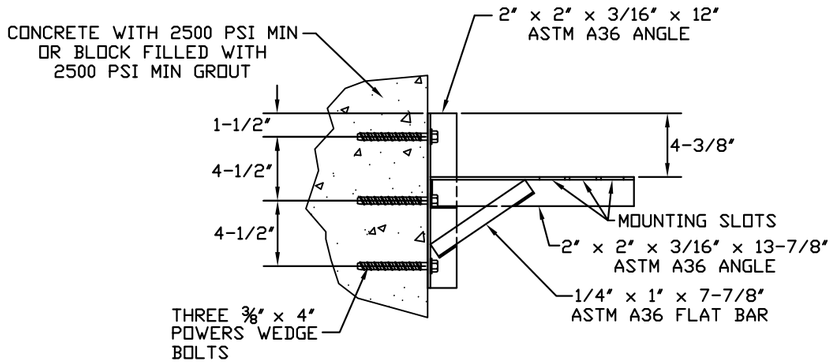


DOOR MOUNTING BRACKET TO MASONRY DETAIL

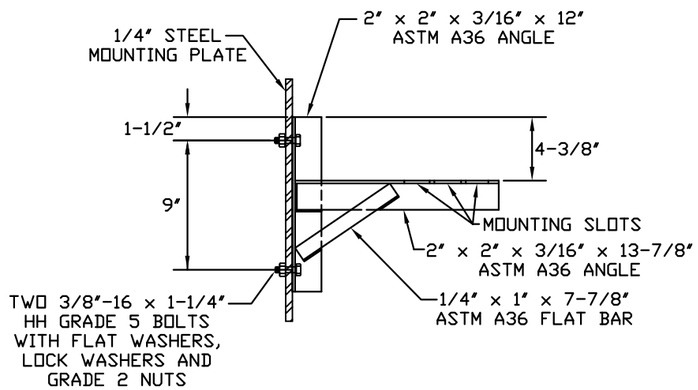


DOOR MOUNTING BRACKET TO STEEL DETAIL

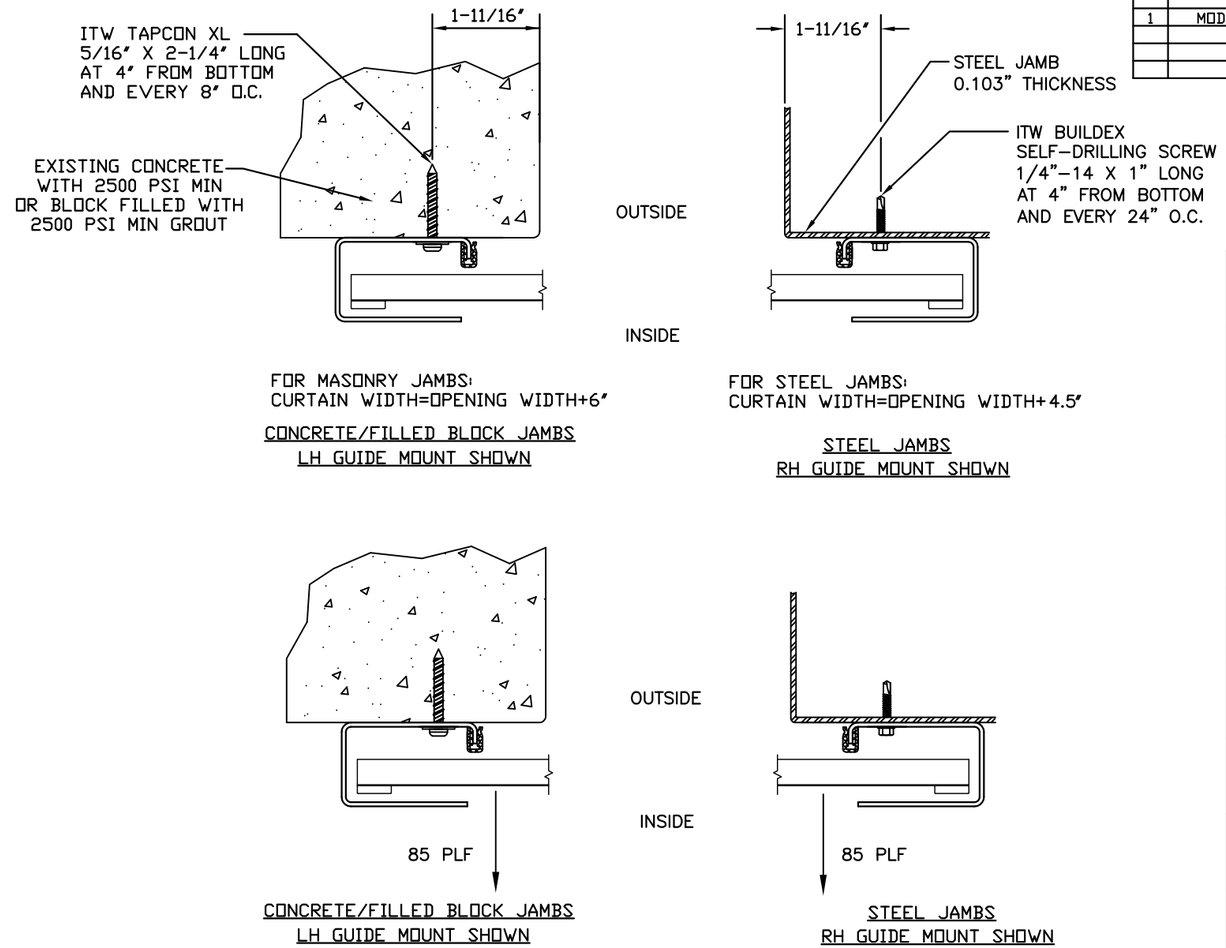


FOR MASONRY JAMBS:
CURTAIN WIDTH=OPENING WIDTH+6"

CONCRETE/FILLED BLOCK JAMBS
LH GUIDE MOUNT SHOWN

FOR STEEL JAMBS:
CURTAIN WIDTH=OPENING WIDTH+4.5"

STEEL JAMBS
RH GUIDE MOUNT SHOWN

CONCRETE/FILLED BLOCK JAMBS
LH GUIDE MOUNT SHOWN

STEEL JAMBS
RH GUIDE MOUNT SHOWN

SUPERIMPOSED LOAD DIAGRAM

## DOOR SCHEDULE

| DOOR WIDTH | DESIGN PRESSURE (PSF) |
|---|---|
| ≤ 3'-0" | +39.6 |
| | -46.2 |
| 4'-0" | +31.1 |
| | -36.3 |
| 5'-0" | +25.6 |
| | -29.9 |
| 6'-0" | +21.7 |
| | -25.4 |
| 7'-0" | +18.9 |
| | -22.1 |
| 8'-0" | +16.7 |
| | -19.5 |
| 9'-0" | +15.0 |
| | -17.5 |
| 10'-0" | +13.6 |
| | -15.9 |
| 11'-0" | +12.4 |
| | -14.5 |
| 12'-0" | +11.5 |
| | -13.4 |

GENERAL NOTES:

1. THIS DOOR EVALUATED IN ACCORDANCE WITH TEST METHODS ASTM E330-02 AND ANSI/DASMA 108-05.
2. THIS PRODUCT EVALUATION IS GENERIC. IT DOES NOT INCLUDE INFORMATION PREPARED FOR A SPECIFIC SITE.
3. IT IS THE CONTRACTOR'S RESPONSIBILITY TO VERIFY THE STRUCTURAL CAPACITY OF THE SUBSTRATE (JAMB) TO RESIST THE LOADS IMPOSED BY THE ROLL-UP DOOR.
4. ALL DOOR JAMBS (MASONRY OR STEEL) MUST BE DESIGNED TO RESIST THE FORCES SHOWN IN SUPERIMPOSED LOAD DIAGRAM.
5. THE DOOR ASSEMBLY SHALL BE INSTALLED IN ACCORDANCE WITH THE MANUFACTURER'S INSTALLATION INSTRUCTIONS.

Digitally signed by John E. Scates, P.E.
Date: 2015.06.25 15:03:36 -05'00'


JOHN E. SCATES PE
3121 FAIRGATE
CARROLTON, TX 75007

FL PE 51737
TX PE 56308/F-2203



THESE CONFIDENTIAL DOCUMENTS SUBMITTED BY DBCI CONTAIN INFORMATION OF A PROPRIETARY NATURE AND MAY NOT BE REPRODUCED OR USED TO MANUFACTURE ANYTHING IN PART OR IN WHOLE FOR ANY PURPOSE OTHER THAN THAT WHICH IS NECESSARY FOR PREPARATION OF BIDS OR ENGINEERING WITHOUT THE EXPRESS PERMISSION OF DBCI WHICH MAY RECALL DOCUMENTS AT ANY TIME.


| | |
|---|---|
| PART NUMBER: | N/A |
| MATERIAL: | N/A |
| APPLIED FINISH: | N/A |
| UNIT OF MEASURE: | N/A |
| APPROVALS | DATE: |
| DRAWN BRAY ALLEN | 11/14/08 |
| CHECKED BRAY ALLEN | 11/14/08 |
| APPROVED | |

DBCI®
DOORS & BUILDING COMPONENTS
DOUGLASVILLE, GA CHANDLER, AZ HOUSTON, TX
©2000 DBCI ALL RIGHTS RESERVED

26 GA. WIND LOAD, MAX. SIZE 12'-0" x 20'-0"

SERIES 2400/2500 DOOR ASSEMBLY

| SIZE | DRAWING NUMBER | REV. |
|---|---|---|
| B | -2500-08-0001 | 1 |

SCALE: NONE SHEET 2 OF 2