TAYLOR Entrance Systems™

AMERICA'S DOORMAKER

631 N. FIRST ST. WEST BRANCH, MI 48661

GLAZED STEEL DOORS
SINGLES
w/ or w/o SIDELITES

INSWING / OUTSWING
"IMPACT"

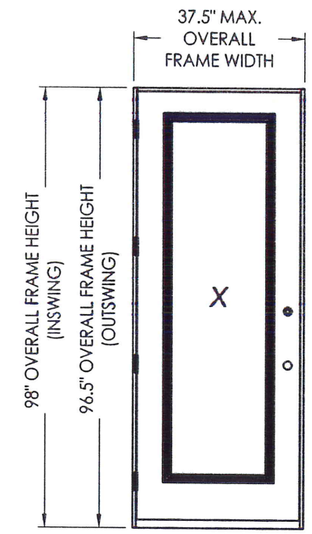

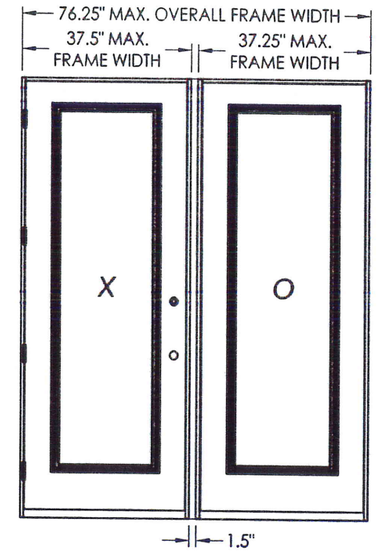

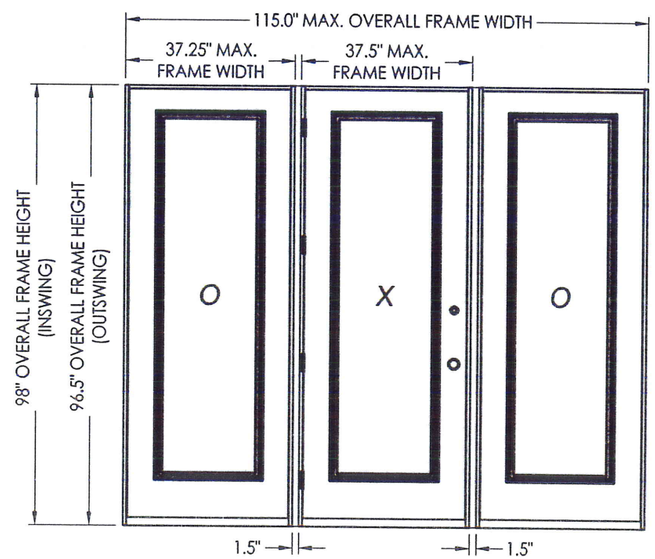

EVALUATED FOR USE IN THE STATE OF TEXAS

The Steel Door described herein complies with the 2006 International Residential Code (IRC), Sections R301 & R613 and the 2006 International Building Code (IBC), Sections 1405.12, 1609, 1714.5, 2403 and 2404 (including Texas revisions) subject to the following conditions:

1. Anchors shall be as listed and spaced as shown in the details. Anchor embedment to base material shall be beyond wall dressing or stucco.
2. This system has been tested and evaluated as a large missile impact protective system for installation in the Seaward, Inland I and Inland II areas. This product meets missile level "D" as defined in ASTM E 1996.
3. Allowable design pressure requirements must be equal to or less than the design pressure rating shown in the design pressure chart, sheet 1 of this drawing.
4. Conditions not covered by this drawing are subject to further engineering analysis.

CONFIG.	MAX. FRAME DIMENSION	DESIGN PRESSURE (PSF) INSWING		DESIGN PRESSURE (PSF) OUTSWING	
		POS.	NEG.	POS.	NEG.
X	37.5" x 98.0"	+50.0	-50.0	+50.0	-50.0
OX / XO	76.25" x 98.0"				
OXO	115.0" x 98.0"				

TABLE OF CONTENTS

SHEET#	DESCRIPTION
1	Typical elevations, design pressures & general notes
2	Door & Sidelite panel details
3	Elevations
4	Vertical cross sections
5	Horizontal cross sections
6	Frame anchoring & hardware details
7	Bill of materials and components

Documents Prepared By: Lyndon F. Schmidt, P.E.
TEXAS P.E. #104123
R.W. BUILDING CONSULTANTS, INC.
P.O. Box 230 Valrico FL. 33595
Phone No.: 813.659.9197
TEXAS BOARD OF PROFESSIONAL ENGINEERS
CERTIFICATE OF REGISTRATION # F-11852

11-12-14

PRODUCT: TAYLOR DOOR STEEL DOOR

PART OR ASSEMBLY: TYPICAL ELEVATION, DESIGN PRESSURES & GENERAL NOTES

NO.	DATE	REVISIONS	BY

DATE: 11/3/14
SCALE: N.T.S.
DWG. BY: JK
CHK. BY: LFS
DRAWING NO.: TX-4506
SHEET 1 OF 7

© 2014 R.W. BUILDING CONSULTANTS INC.

R:\Clients\Taylor Permanent\TX-4504-07.dwg, TX-4506

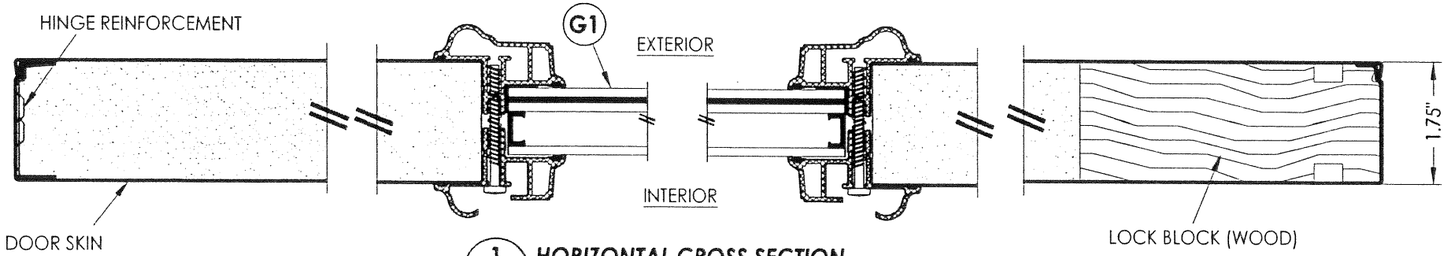

1/2 HORIZONTAL CROSS SECTION

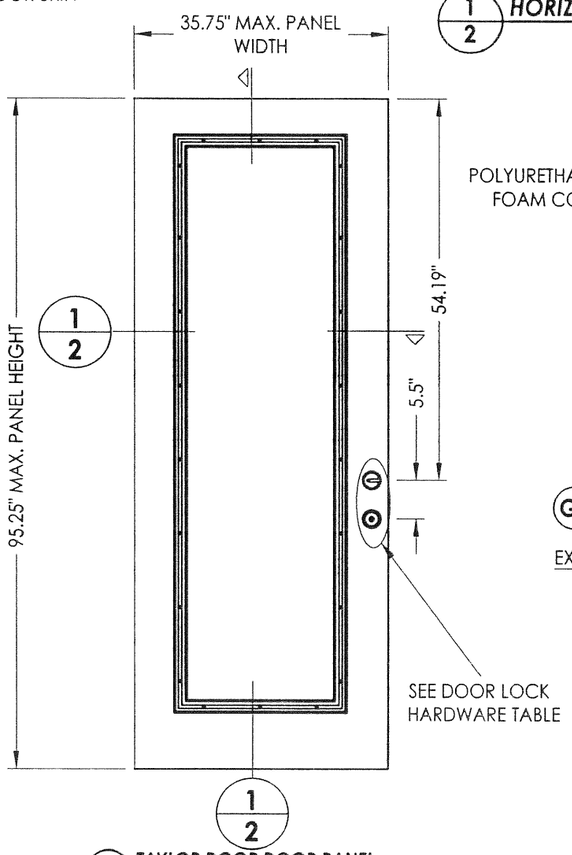

40 TAYLOR DOOR DOOR PANEL

50 TAYLOR DOOR SIDELITE PANEL

DOOR SKIN: 0.022" MIN. THK. STEEL
CORE MATERIAL: POLYURETHANE FOAM

HARDWARE CHART	
MANUFACTURER	MODEL
YALE	KNOB: NEW TRADITIONS DEADBOLT: NEW TRADITIONS (800 SERIES)
SCHLAGE	KNOB/LEVER: "F" SERIES DEADBOLT: B60/62

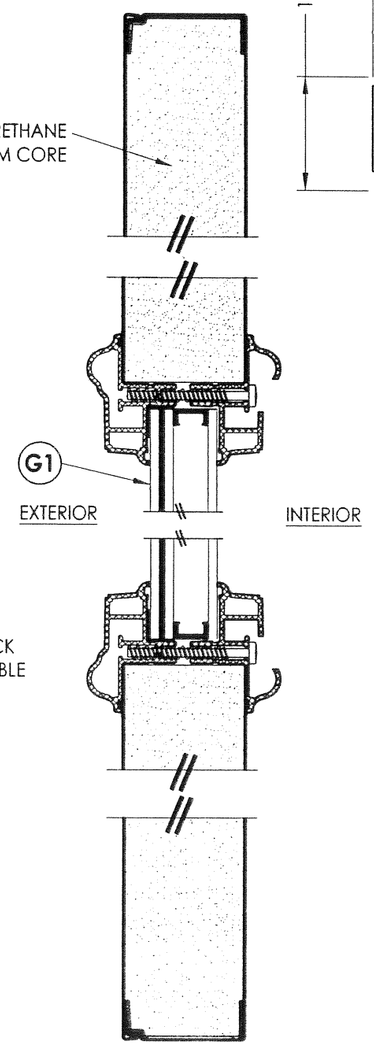

2/2 VERTICAL CROSS SECTION

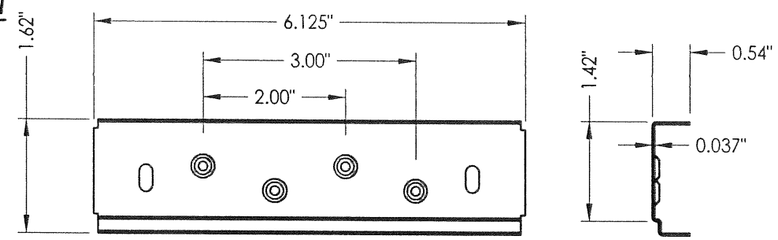

3 HINGE REINFORCEMENT

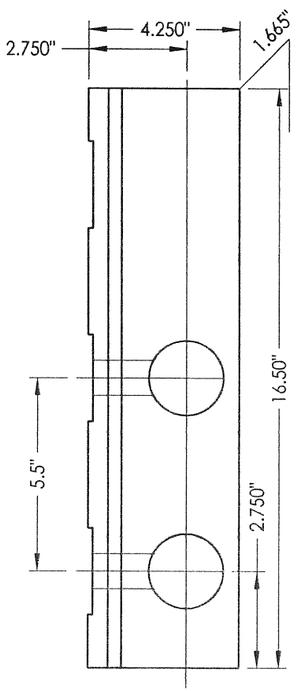

4 LOCK BLOCK DETAIL

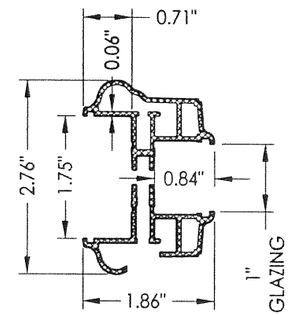

3A ODL LITE FRAME
Aluminum

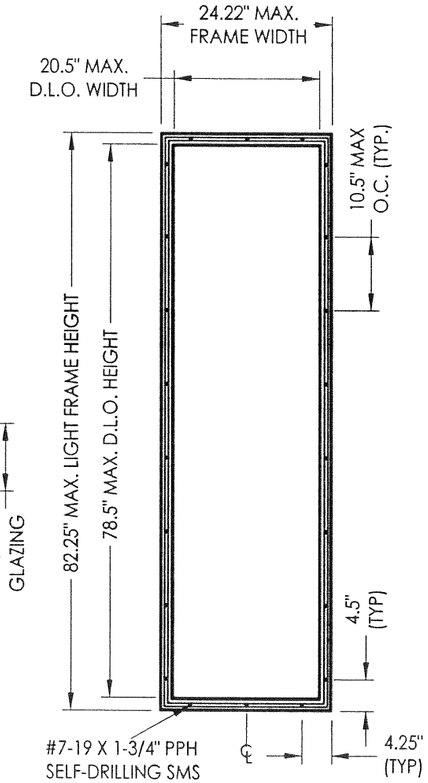

ODL LITE FRAME

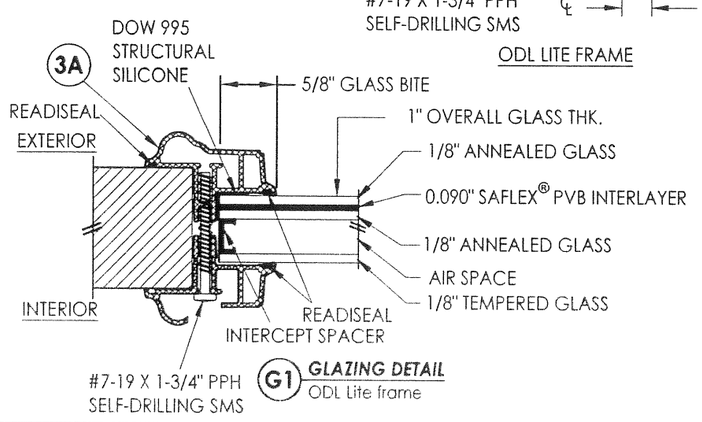

G1 GLAZING DETAIL
ODL Lite frame

Documents Prepared By: Lyndon F. Schmidt, P.E. TEXAS P.E. #104123
RW BUILDING CONSULTANTS, INC.
P.O. Box 230 Valrico FL 33595
Phone No.: 813.659.9197
TEXAS BOARD OF PROFESSIONAL ENGINEERS CERTIFICATE OF REGISTRATION # F-11852

PRODUCT: TAYLOR DOOR STEEL DOOR

PART OR ASSEMBLY: SIDELITE PANEL DETAILS

NO.	DATE	REVISIONS	BY

DATE: 11/11/14
SCALE: N.T.S.
DWG. BY: JK
CHK. BY: LFS
DRAWING NO.: TX-4506
SHEET 2 OF 7

© 2014 R.W. BUILDING CONSULTANTS INC.

R:\Clients\Taylor Permanent\TX-4504-07.dwg, 2.3

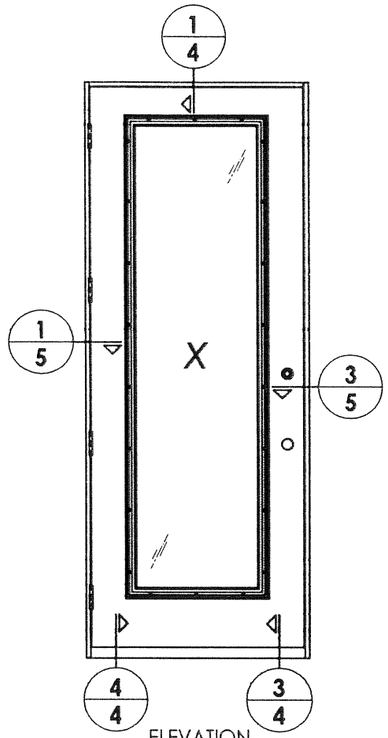

ELEVATION
X

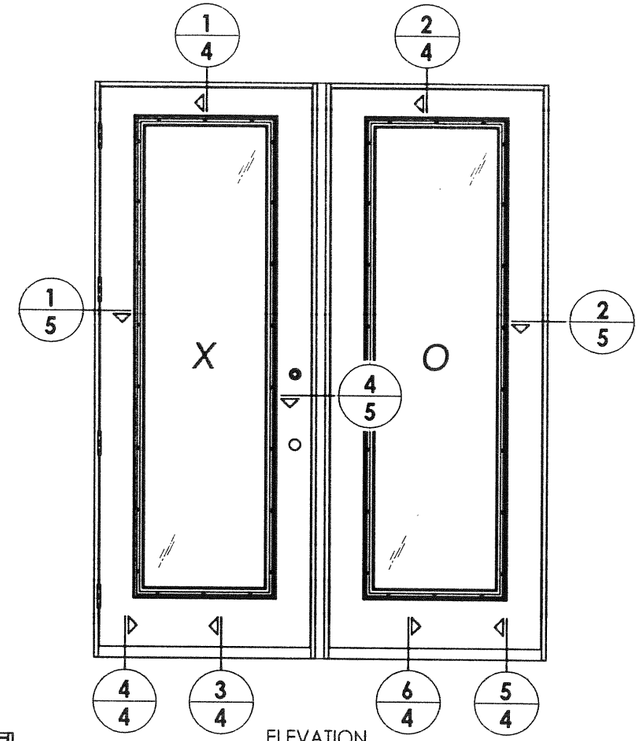

ELEVATION
XO / OX

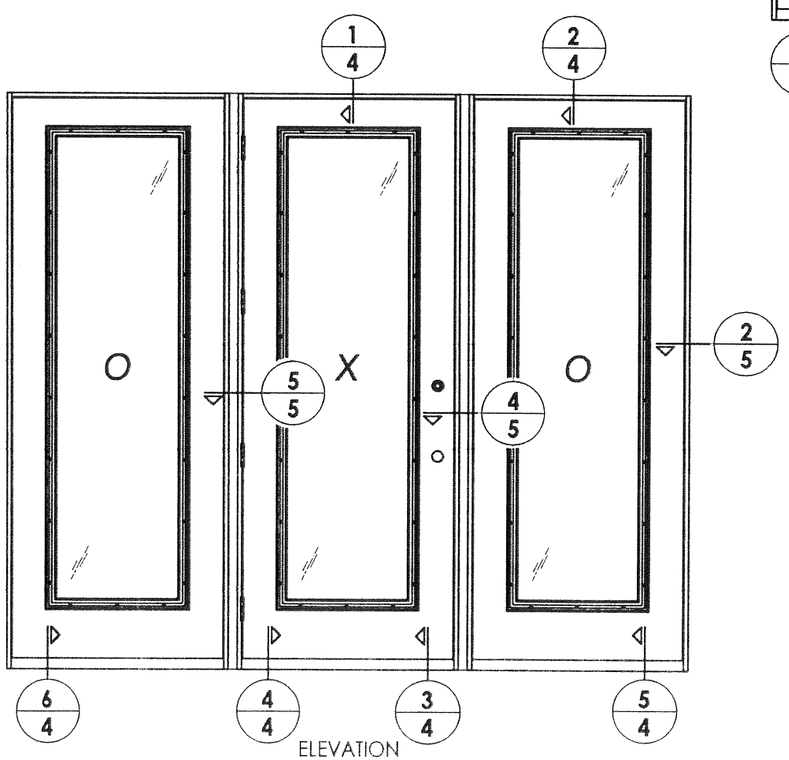

ELEVATION
OXO

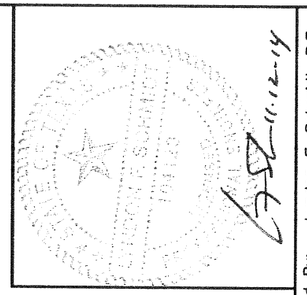

Documents Prepared By: Lyndon F. Schmidt, P.E.
TEXAS P.E. #104123

RW BUILDING CONSULTANTS, INC.
P.O. Box 230 Valrico FL. 33595
Phone No.: 813.659.9197

TEXAS BOARD OF PROFESSIONAL ENGINEERS
CERTIFICATE OF REGISTRATION # F-11852

PRODUCT: TAYLOR DOOR STEEL DOOR

PART OR ASSEMBLY: ELEVATIONS

REVISIONS

NO.	DATE	BY

DATE: 11/3/14
SCALE: N.T.S.
DWG. BY: JK
CHK. BY: LFS
DRAWING NO.: TX-4506
SHEET 3 OF 7

© 2014 R.W. BUILDING CONSULTANTS INC.

R:\Clients\Taylor Permanent\TX-4504-07.dwg, 3.3

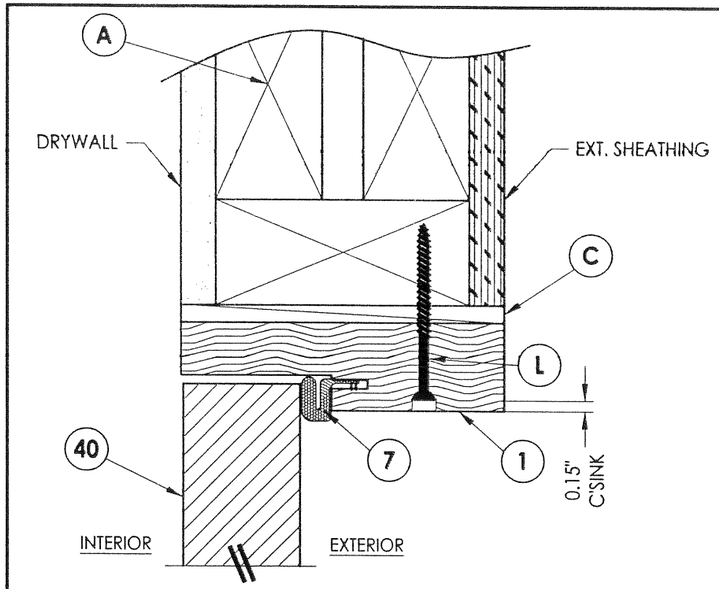

1/4 **VERTICAL CROSS SECTION**
Inswing shown (Outswing similar)

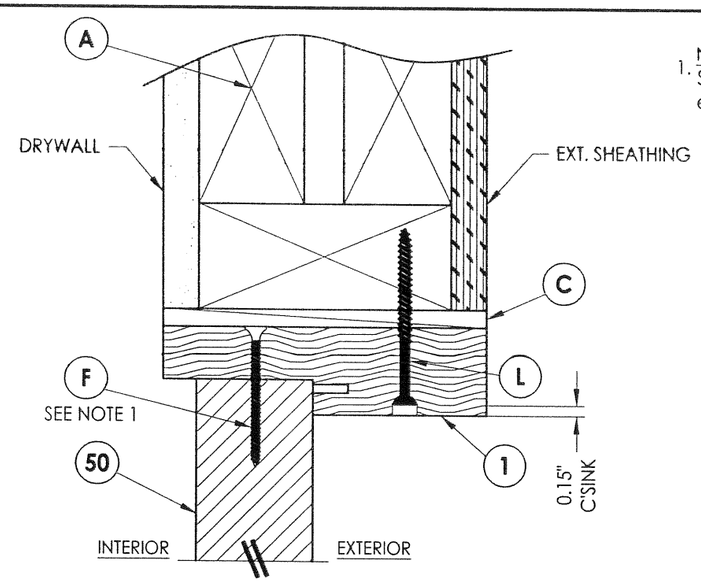

2/4 **VERTICAL CROSS SECTION**
Inswing shown (Outswing similar)

1. NOTE:
Spacing for item F or K @ head & sill: 6" from each end plus 1 @ centerline (3 total).

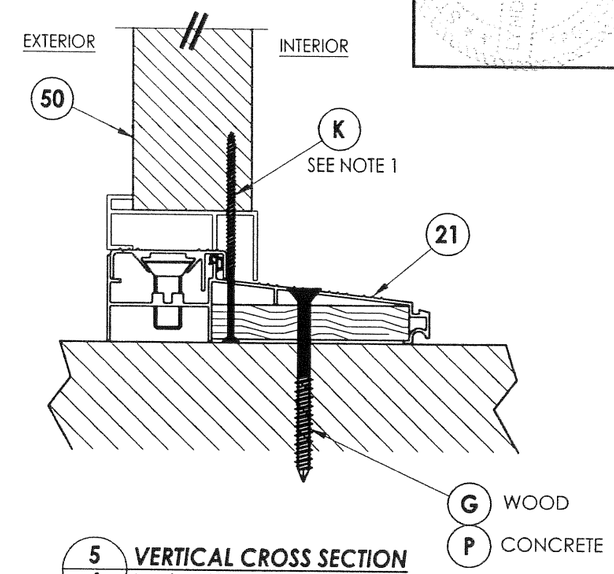

5/4 **VERTICAL CROSS SECTION**
Inswing sill

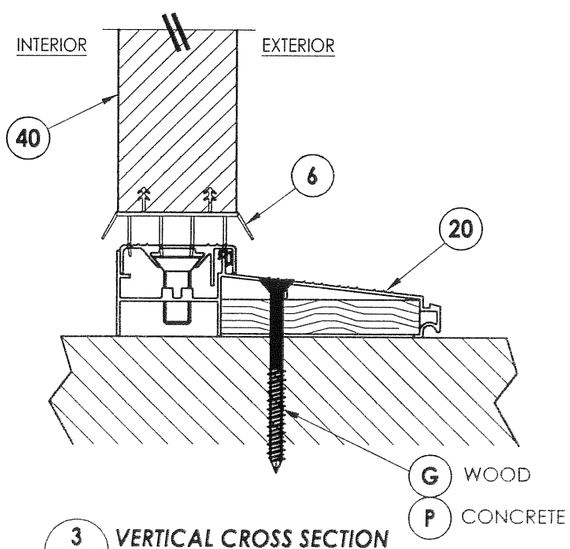

3/4 **VERTICAL CROSS SECTION**
Inswing sill

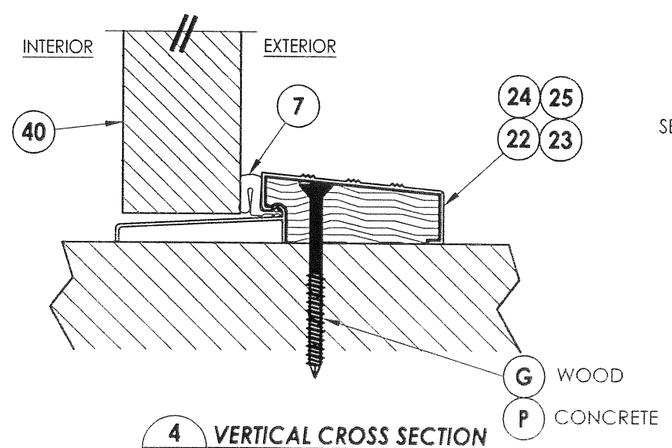

4/4 **VERTICAL CROSS SECTION**
Outswing sill

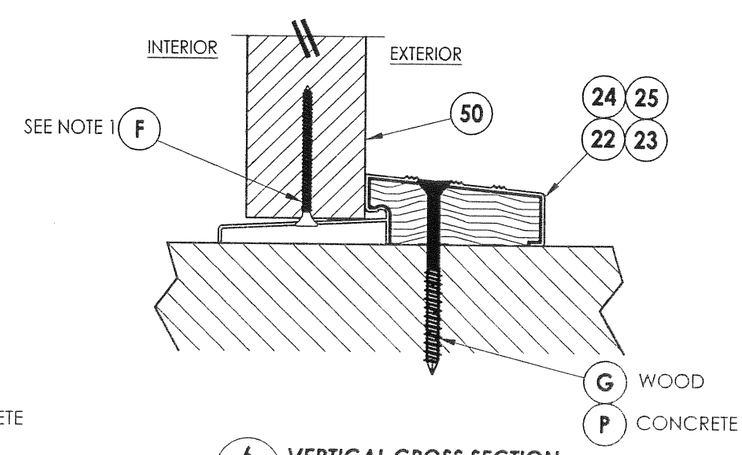

6/4 **VERTICAL CROSS SECTION**
Outswing sill

Documents Prepared By: Lyndon F. Schmidt, P.E.
TEXAS P.E. #104123

RW BUILDING CONSULTANTS, INC.
P.O. Box 230 Valrico FL. 33595
Phone No.: 813.659.9197

TEXAS BOARD OF PROFESSIONAL ENGINEERS
CERTIFICATE OF REGISTRATION # F-11852

PRODUCT: TAYLOR DOOR STEEL DOOR

PART OR ASSEMBLY: VERTICAL CROSS SECTIONS

NO.	DATE	REVISIONS	BY

DATE: 11/3/14
SCALE: N.T.S.
DWG. BY: JK
CHK. BY: LFS
DRAWING NO.: TX-4506
SHEET 4 OF 7

© 2014 R.W. BUILDING CONSULTANTS INC.

R:\Clients\Taylor Permanent\TX-4504-07.dwg, 4.3

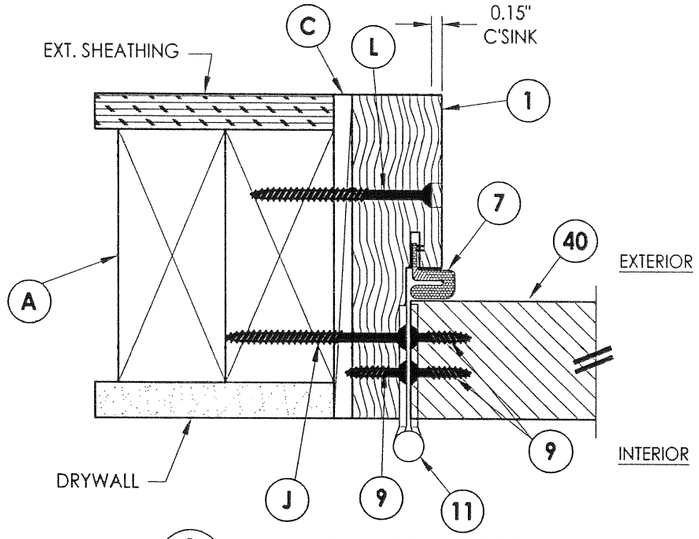

1/5 **HORIZONTAL CROSS SECTION**
Inswing shown (Outswing similar)

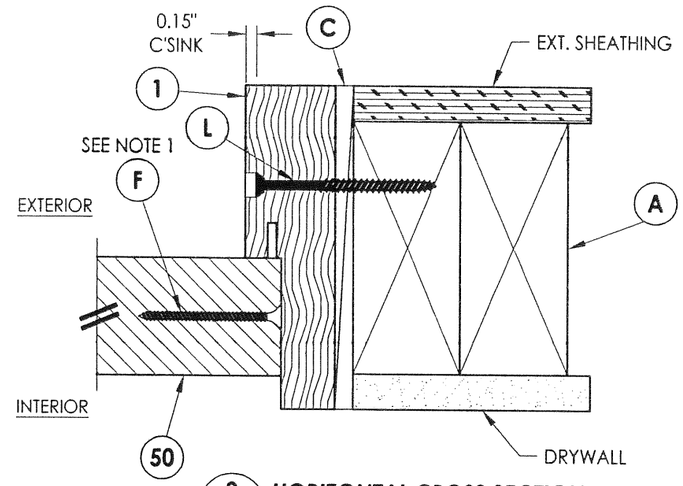

2/5 **HORIZONTAL CROSS SECTION**
Inswing shown (Outswing similar)

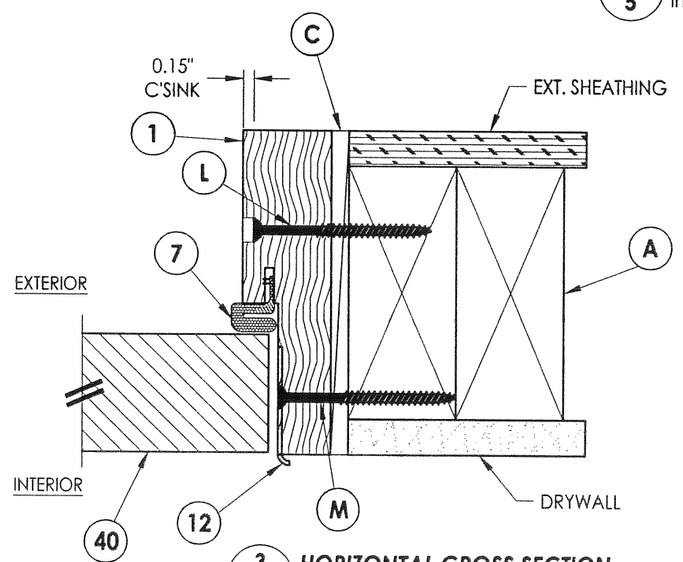

3/5 **HORIZONTAL CROSS SECTION**
Inswing shown (Outswing similar)

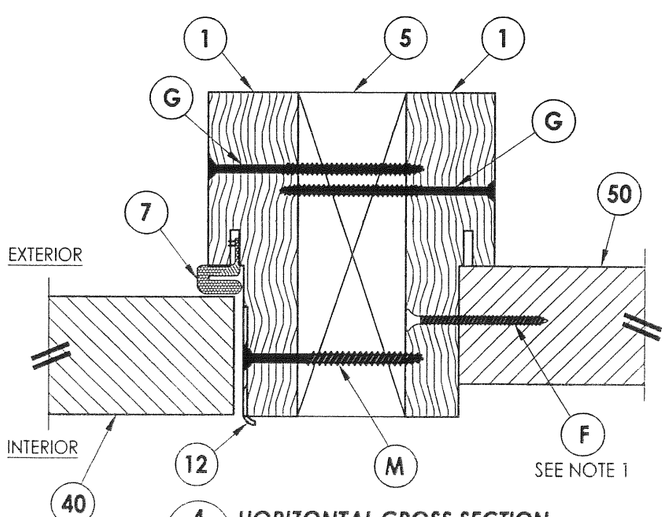

4/5 **HORIZONTAL CROSS SECTION**
Inswing shown (Outswing similar)

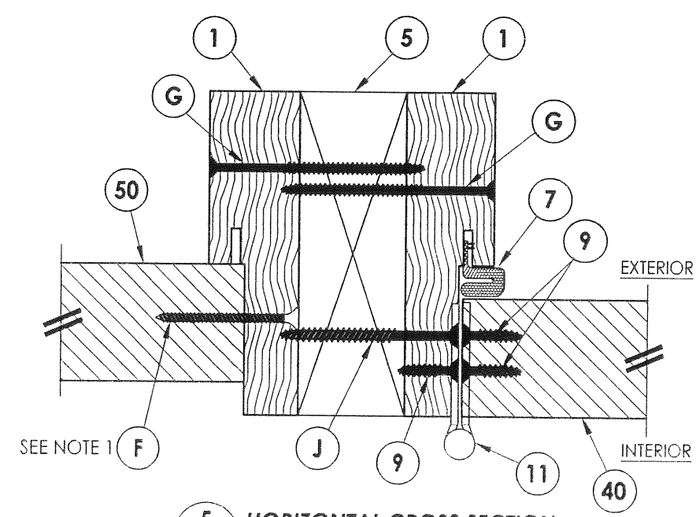

5/5 **HORIZONTAL CROSS SECTION**
Inswing shown (Outswing similar)

NOTE:
1. Spacing for item F: 6" from each end and 6 more equally spaced along sidelite jamb (8 total).

11.12.14

Documents Prepared By: Lyndon F. Schmidt, P.E.
TEXAS P.E. #104123

RW BUILDING CONSULTANTS, INC.
P.O. Box 230 Valrico FL 33595
Phone No.: 813.659.9197

TEXAS BOARD OF PROFESSIONAL ENGINEERS
CERTIFICATE OF REGISTRATION # F-11852

PRODUCT: TAYLOR DOOR STEEL DOOR

PART OR ASSEMBLY: HORIZONTAL CROSS SECTIONS

NO.	DATE	REVISIONS	BY

DATE: 11/3/14
SCALE: N.T.S.
DWG. BY: JK
CHK. BY: LFS
DRAWING NO.: TX-4506
SHEET 5 OF 7

© 2014 R.W. BUILDING CONSULTANTS INC.

R:\Clients\Taylor Permanent\TX-4504-07.dwg, 5.3

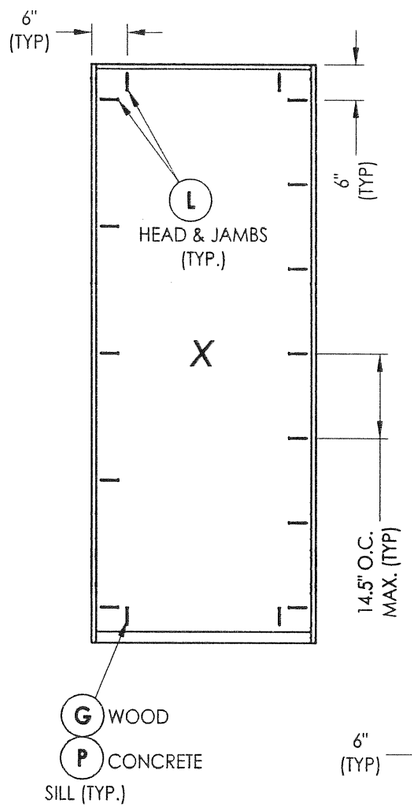

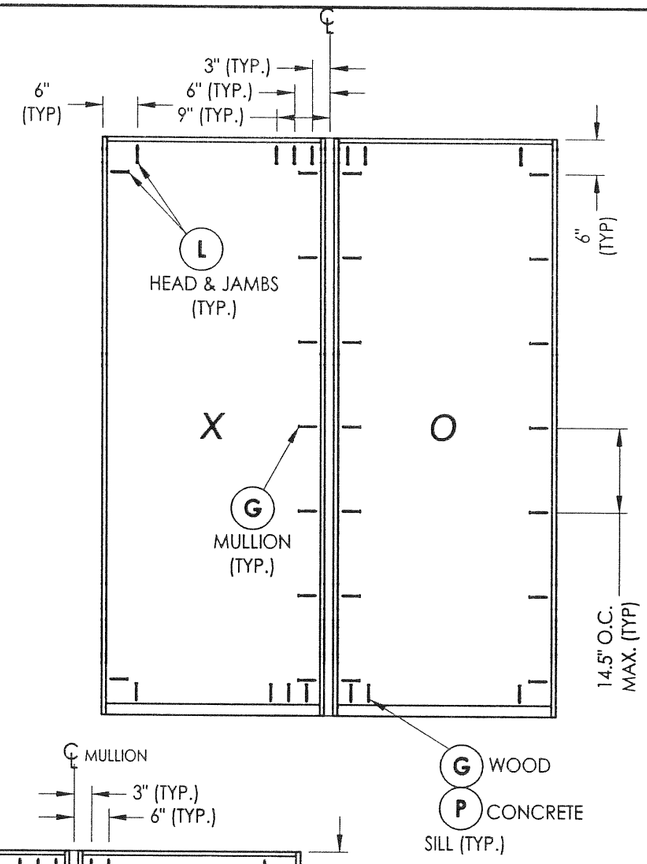

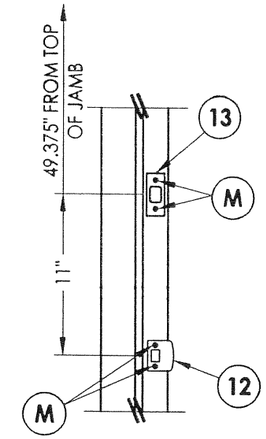

LATCH AND DEADBOLT DETAILS

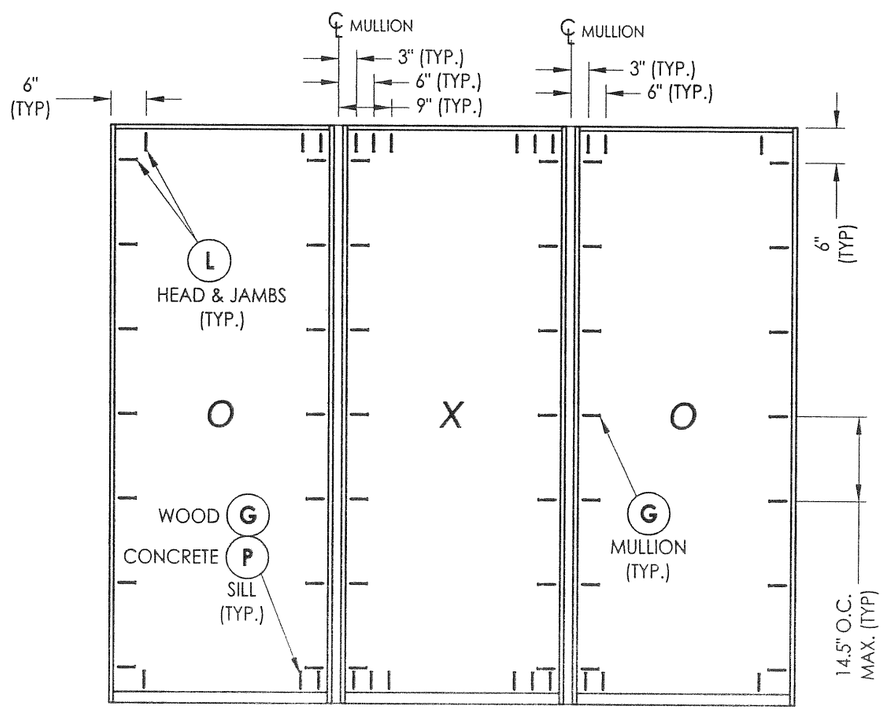

FRAME ANCHORING
2X stud framing
w/ wood/concrete substrate

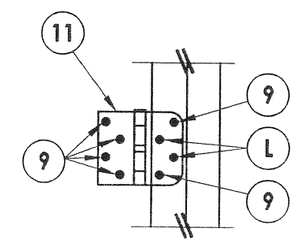

HINGE DETAIL

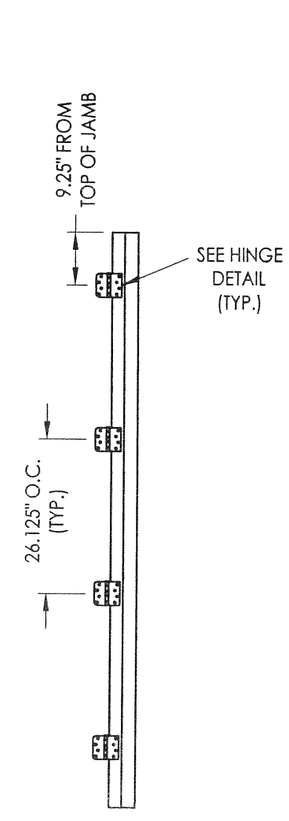

HINGE JAMB

Documents Prepared By: Lyndon F. Schmidt, P.E. TEXAS P.E. #104123

R.W. BUILDING CONSULTANTS, INC.
P.O. Box 230 Valrico FL. 33595
Phone No.: 813.659.9197

TEXAS BOARD OF PROFESSIONAL ENGINEERS CERTIFICATE OF REGISTRATION # F-11852

PRODUCT: TAYLOR DOOR STEEL DOOR

PART OR ASSEMBLY: FRAME ANCHORING & HARDWARE DETAILS

NO.	DATE	REVISIONS	BY

DATE: 11/3/14
SCALE: N.T.S.
DWG. BY: JK
CHK. BY: LFS
DRAWING NO.: TX-4506
SHEET 6 OF 7

© 2014 R.W. BUILDING CONSULTANTS INC.

R:\Clients\Taylor Permanent\TX-4504-07.dwg, 6.3

BILL OF MATERIALS

ITEM #	DESCRIPTION	MATERIAL
A	2X FRAMING (SG >= 0.42)	WOOD
C	1/4" MAX. SHIM SPACE	-
F	#7 X 2" PFH DRYWALL SCREW	STEEL
G	#10 X 3" PFH WOOD SCREW (1-1/2" MIN. EMB.)	STEEL
J	#10 X 2-1/2" PFH WOOD SCREW	STEEL
K	#6 X 3" PFH WOOD SCREW	STEEL
L	#10 X 2-1/2" PFH WOOD SCREW (1.15" MIN. EMB.)	STEEL
M	#8 X 2-1/2" PFH SMS	STEEL
P	1/4" PFH CONCRETE SCREW (1-3/4" MIN. EMB.)	STEEL
1	WOOD JAMB (FINGER-JOINT PINE)	WOOD
5	2X MULLION (SG >= 0.55)	WOOD
6	SWEEP	PVC
7	WEATHERSTRIP	FOAM
9	#10 x 3/4" PFH WOOD SCREW	STEEL
11	4" X 4" HINGE	STEEL
12	LATCH STRIKE PLATE	STEEL
13	DEADBOLT STRIKE PLATE	STEEL
20	INSWING THRESHOLD	ALUM/WOOD
21	INSWING THRESHOLD w/ SIDELITE ADAPTER	ALUM/WOOD
22	OUTSWING THRESHOLD	ALUM/WOOD
23	OUTSWING THRESHOLD	ALUM/WOOD
24	OUTSWING THRESHOLD	ALUM/WOOD
25	OUTSWING THRESHOLD	ALUM
40	DOOR PANEL	-
50	SIDELITE PANEL	-

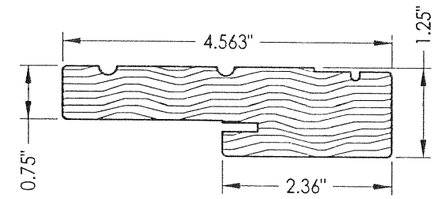

1 WOOD JAMB

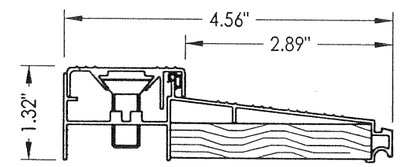

20 INSWING THRESHOLD
DLP

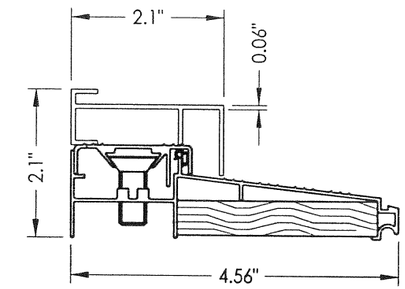

21 INSWING THRESHOLD w/ SIDELITE ADAPTER
DLP

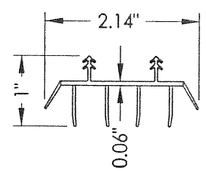

6 SWEEP

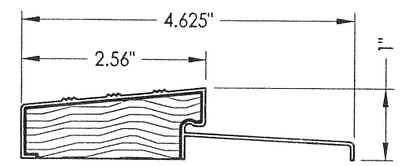

22 OUTSWING THRESHOLD
DLP (QOS)

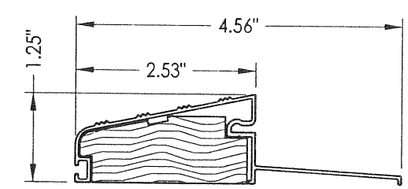

23 OUTSWING THRESHOLD
DLP (QOSH)

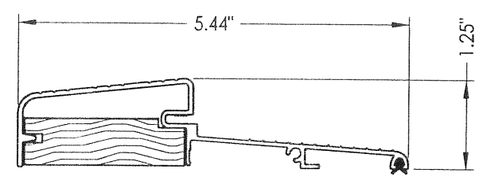

24 OUTSWING THRESHOLD
Combo

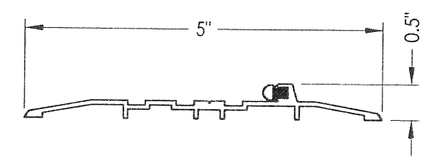

25 OUTSWING THRESHOLD
DLP (OSHC)

CONCRETE ANCHOR NOTES:

1. *Concrete anchor locations at the corners may be adjusted to maintain the min. edge distance to mortar joints.*
2. *Concrete anchor locations noted as "MAX. ON CENTER" must be adjusted to maintain the min. edge distance to mortar joints, additional concrete anchors may be required to ensure the "MAX. ON CENTER" dimension are not exceeded.*
3. *Concrete anchor table:*

ANCHOR TYPE	ANCHOR SIZE	MIN. EMBEDMENT	MIN. CLEARANCE TO MASONRY EDGE	MIN. CLEARANCE TO ADJACENT ANCHOR
ITW TAPCON®	1/4"	1-3/4"	1-1/2"	4"
ELCO ULTRACON®	1/4"	1-3/4"	1"	4"

Documents Prepared By: Lyndon F. Schmidt, P.E.
TEXAS P.E. #104123
RW BUILDING CONSULTANTS, INC.
P.O. Box 230 Valrico FL 33595
Phone No.: 813.659.9197
TEXAS BOARD OF PROFESSIONAL ENGINEERS
CERTIFICATE OF REGISTRATION # F-11852

PRODUCT: TAYLOR DOOR STEEL DOOR

PART OR ASSEMBLY: BILL OF MATERIALS & COMPONENTS

NO.	DATE	REVISIONS	BY

DATE: 11/3/14
SCALE: N.T.S.
DWG. BY: JK
CHK. BY: LFS
DRAWING NO.: TX-4506
SHEET 7 OF 7

© 2014 R.W. BUILDING CONSULTANTS INC.

R:\Clients\Taylor Permanent\TX-4504-07.dwg, 7.3