JELD-WEN, inc.

CUSTOM CLAD 10'0 TALL WOOD OUTSWING PATIO DOORS (IMPACT)

INSTALLATION NOTES:

1. ONE (1) INSTALLATION ANCHOR IS REQUIRED AT EACH ANCHOR LOCATION SHOWN.
2. THE NUMBER OF INSTALLATION ANCHORS DEPICTED IS THE MINIMUM NUMBER OF ANCHORS TO BE USED FOR PRODUCT INSTALLATION OF THE MAXIMUM SIZE LISTED.
3. INSTALL INDIVIDUAL INSTALLATION ANCHORS WITHIN A TOLERANCE OF ±1/2 INCH (I.E., WITHOUT CONSIDERATION OF TOLERANCES). TOLERANCES ARE NOT CUMULATIVE FROM ONE INSTALLATION ANCHOR TO THE NEXT.
4. SHIM AS REQUIRED AT EACH INSTALLATION ANCHOR WITH LOAD BEARING SHIM(S). MAXIMUM ALLOWABLE SHIM STACK TO BE 1/4 INCH. SHIM WHERE SPACE OF 1/16 INCH OR GREATER OCCURS. SHIM(S) SHALL BE CONSTRUCTED OF HIGH DENSITY PLASTIC OR BETTER.
5. **THROUGH FRAME:** FOR INSTALLATION INTO 2X WOOD FRAMING USE #12 WOOD SCREWS OF SUFFICIENT LENGTH TO ACHIEVE 1 1/2 INCH MINIMUM EMBEDMENT INTO WOOD SUBSTRATE.
6. **THROUGH FRAME:** FOR INSTALLATION THROUGH 1X BUCK TO CONCRETE/MASONRY, OR DIRECTLY INTO CONCRETE/MASONRY, USE 1/4 INCH DIAMETER ITW TAPCONS OF SUFFICIENT LENGTH TO ACHIEVE 1 1/4 INCH MINIMUM EMBEDMENT.
7. MINIMUM EMBEDMENT AND EDGE DISTANCE EXCLUDE WALL FINISHES, INCLUDING BUT NOT LIMITED TO STUCCO, FOAM, BRICK VENEER, AND SIDING.
8. INSTALLATION ANCHORS AND ASSOCIATED HARDWARE MUST BE MADE OF CORROSION RESISTANT MATERIAL OR HAVE A CORROSION RESISTANT COATING.
9. FOR HOLLOW BLOCK AND GROUT FILLED BLOCK, DO NOT INSTALL INSTALLATION ANCHORS INTO MORTAR JOINTS. EDGE DISTANCE IS MEASURED FROM FREE EDGE OF BLOCK OR EDGE OF MORTAR JOINT INTO FACE SHELL OF BLOCK.
10. INSTALLATION ANCHORS SHALL BE INSTALLED IN ACCORDANCE WITH ANCHOR MANUFACTURER'S INSTALLATION INSTRUCTIONS, AND ANCHORS SHALL NOT BE USED IN SUBSTRATES WITH STRENGTHS LESS THAN THE MINIMUM STRENGTH SPECIFIED BY THE ANCHOR MANUFACTURER.
11. INSTALLATION ANCHOR CAPACITIES FOR PRODUCTS HEREIN ARE BASED ON SUBSTRATE MATERIALS WITH THE FOLLOWING PROPERTIES:
    A. WOOD - MINIMUM SPECIFIC GRAVITY OF 0.42 (SPRUCE-PINE-FIR)
    B. CONCRETE -MINIMUM COMPRESSIVE STRENGTH OF 3000 PSI.
    C. GROUT-FILLED CMU- UNIT STRENGTH CONFORMS TO ASTM C-90 WITH MINIMUM COMPRESSIVE STRENGTH OF 2000 PSI AND GROUT CONFORMS TO ASTM C 476, MINIMUM GROUT COMPRESSIVE STRENGTH OF 2000 PSI.
    D. HOLLOW BLOCK CMU - UNIT STRENGTH CONFORMS TO ASTM C-90 WITH MINIMUM COMPRESSIVE STRENGTH OF 2000 PSI.

GENERAL NOTES:

1. THE PRODUCT SHOWN HEREIN IS DESIGNED AND MANUFACTURED TO COMPLY WITH THE 2006 INTERNATIONAL BUILDING CODE (IBC) AND INTERNATIONAL RESIDENTIAL CODE (IRC) WITH 2006 TEXAS REVISIONS, EFFECTIVE JANUARY 1, 2008 AND HAS BEEN EVALUATED ACCORDING TO THE FOLLOWING:
    - ASTM E 283-04
    - ASTM E 331-00
    - ASTM E 330-00
    - ASTM E 1886-05
    - ASTM E 1996-06
2. ADEQUACY OF THE EXISTING STRUCTURAL CONCRETE/MASONRY AND 2X FRAMING AS A MAIN WIND FORCE RESISTING SYSTEM CAPABLE OF WITHSTANDING AND TRANSFERRING APPLIED PRODUCT LOADS TO THE FOUNDATION IS THE RESPONSIBILITY OF THE ENGINEER OR ARCHITECT OF RECORD FOR THE PROJECT OF INSTALLATION.
3. 1X AND 2X BUCKS (WHEN USED) SHALL BE DESIGNED AND ANCHORED TO PROPERLY TRANSFER ALL LOADS TO THE STRUCTURE. BUCK DESIGN AND INSTALLATION IS THE RESPONSIBILITY OF THE ENGINEER OR ARCHITECT OF RECORD FOR THE PROJECT OF INSTALLATION.
4. THE INSTALLATION DETAILS DESCRIBED HEREIN ARE GENERIC AND MAY NOT REFLECT ACTUAL CONDITIONS FOR A SPECIFIC SITE. IF SITE CONDITIONS CAUSE INSTALLATION TO DEVIATE FROM THE REQUIREMENTS DETAILED HEREIN, A LICENSED ENGINEER OR ARCHITECT SHALL PREPARE SITE SPECIFIC DOCUMENTS FOR USE WITH THIS DOCUMENT.
5. APPROVED IMPACT PROTECTIVE SYSTEM **IS NOT REQUIRED** ON THIS PRODUCT IN AREAS REQUIRING IMPACT RESISTANCE.
6. JELD-WEN Inc. DOOR FRAME MATERIAL: PRESSURE TREATED PINE
7. DOOR CLADDING MATERIAL: ALUMINUM 6063-T5
8. GLASS MEETS THE REQUIREMENTS OF ASTM E 1300-04 GLASS CHARTS. SEE SHEET 8 FOR GLAZING DETAILS.

TABLE OF CONTENTS

SHEET	REVISION	SHEET DESCRIPTION
1	-	INSTALLATION & GENERAL NOTES
2	-	ELEVATION & ANCHOR LAYOUT (1)
3	-	ELEVATION & ANCHOR LAYOUT (2)
4	-	ELEVATION & ANCHOR LAYOUT (3)
5	-	VERTICAL SECTIONS
6	-	HORIZONTAL SECTIONS
7	-	HORIZONTAL SECTIONS & MULLION CLIP DETAIL
8	-	GLAZING & RAISED PANEL DETAILS
9	-	COMPONENTS & BILL OF MATERIALS
10	-	COMPONENTS
11	-	TYP. QUALIFIED CONFIGURATIONS
12	-	SHOOT BOLT STRIKE DETAILS
13	-	LATCH & DEADBOLT STRIKE DETAILS

MISSILE IMPACT RATING
LARGE & SMALL MISSILE IMPACT

JELD-WEN
WINDOWS & DOORS

JELD-WEN, Inc.
3737 LAKEPORT BOULEVARD
KLAMATH FALLS, OR 97601
PH: (541) 882-3451 FX: (541) 850-2609

TITLE: CUSTOM CLAD 10'0 WOOD OUTSWING DOORS INSTALLATION & GENERAL NOTES

PREPARED BY:
BUILDING DROPS, INC.
398 E. DANIA BEACH BLVD. #338
DANIA BEACH, FL 33004
PH: (954) 399-8478 FX: (954) 744-4738

REVISIONS			
NO.	DESCRIPTION	BY	DATE

STATE OF TEXAS
ALEXIS SPYROU
102957
LICENSED
PROFESSIONAL ENGINEER
ALEXIS SPYROU, P.E.
TEXAS P. E. NO.102957
398 E. DANIA BEACH BLVD. #338
DANIA BEACH, FL 33004
TBPE FIRM #13734

7-16-12

DATE: 12.17.12 | DWN BY: JLA | CHK BY: HFN | SCALE: NTS

DWG #: JW024

SHEET: 1 OF 13

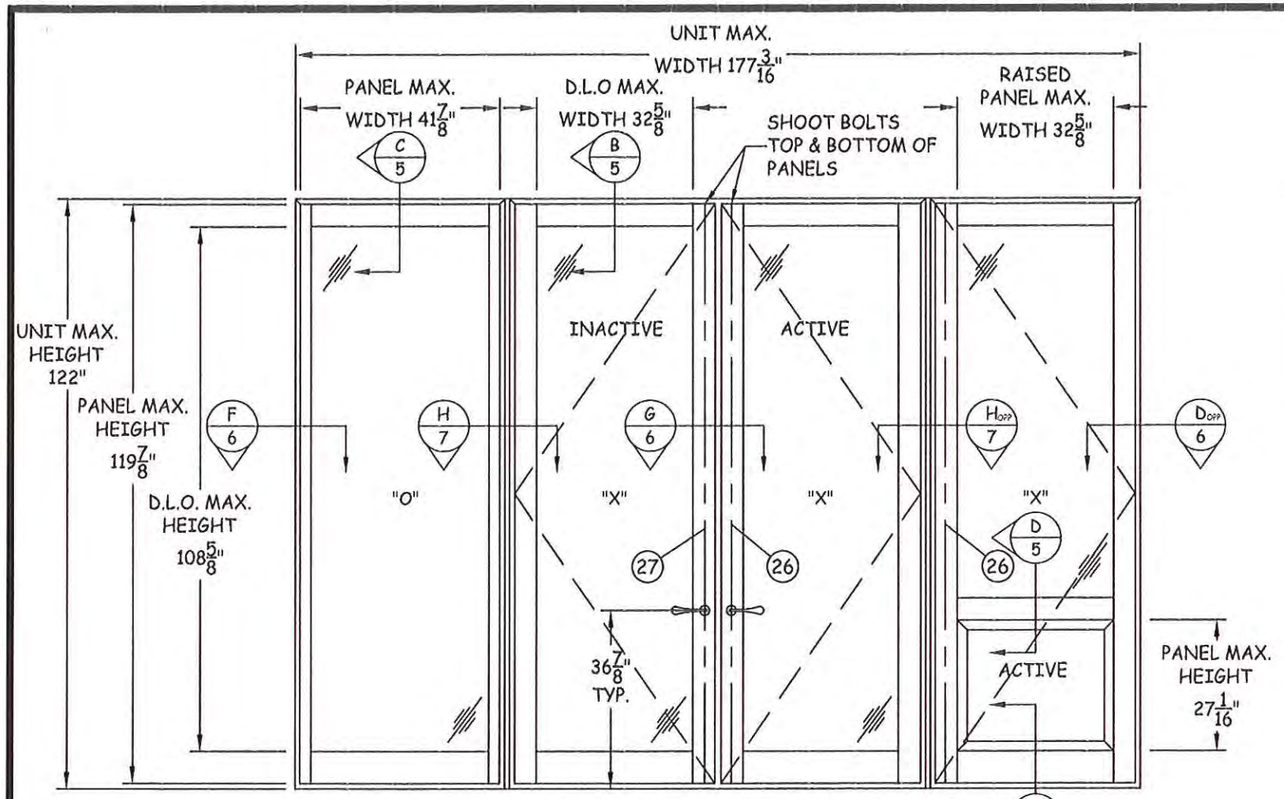

TYPICAL ELEVATION

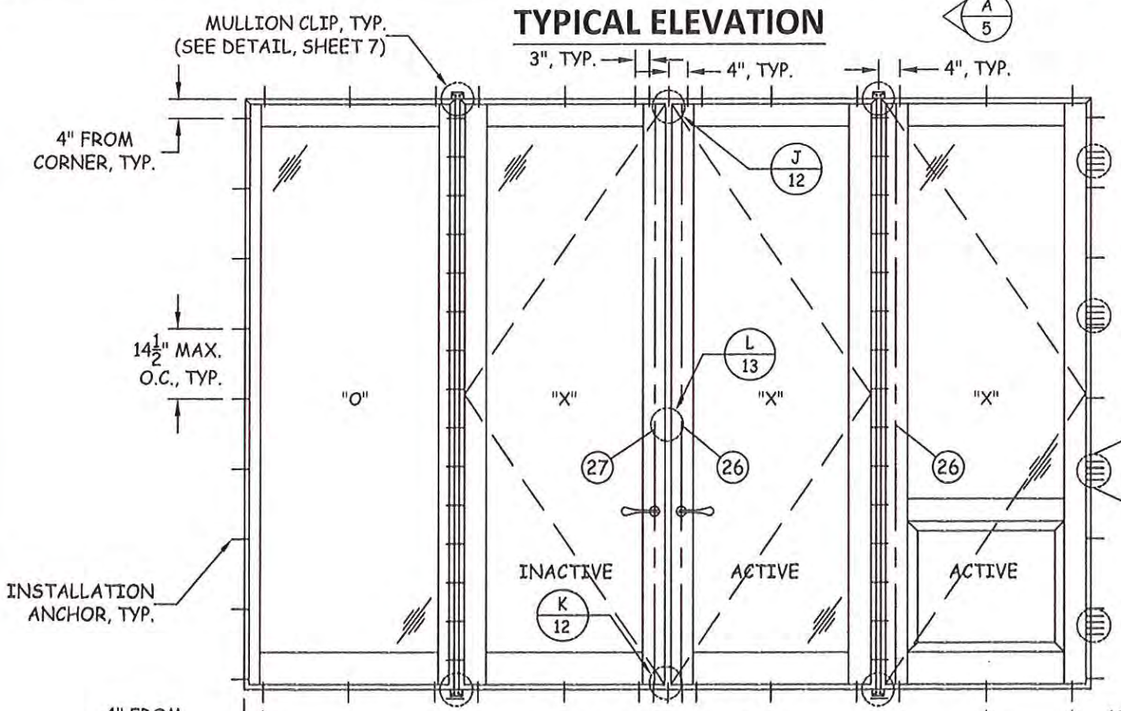

ANCHOR LAYOUT

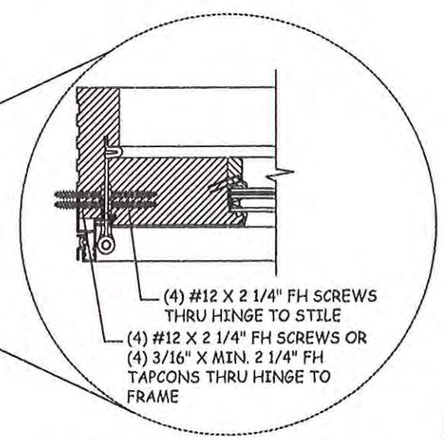

H/2 TYP. HINGE DETAIL

QUALIFIED CONFIGURATIONS	MAX. UNIT WIDTH	MAX. UNIT HEIGHT	DESIGN PRESSURE RATING
O-X-X-X X-X-X-O O-X-X-O X-X-X-X O-X-X X-X-O O-X-O	177-3/16"	122"	+55.0/-65.0 PSF

NOTE:
1. PRODUCTS SHOWN HEREIN MEET WATER INFILTRATION REQUIREMENTS BASED UPON POSITIVE PRESSURE RATING.
2. SEE SHEET 8 FOR GLAZING OPTIONS AND REQUIREMENTS.
3. INTERMEDIATE RAILS & OPAQUE, RAISED PANELS ARE QUALIFIED FOR USE AT THE SIZE NOTED ON EITHER FIXED OR OPERABLE PANELS.
4. FULL LITE GLAZED PANELS ARE QUALIFIED FOR USE AT THE SIZE NOTED ON EITHER FIXED OR OPERABLE PANELS.

NOTE: (5) ANCHORS REQUIRED AT SHOOT BOLT STRIKES

JELD-WEN WINDOWS & DOORS
JELD-WEN, Inc.
3737 LAKEPORT BOULEVARD
KLAMATH FALLS, OR 97601
PH: (541) 882-3451 FX: (541) 850-2609

TITLE: CUSTOM CLAD 10'0 WOOD OUTSWING DOORS
ELEVATION & ANCHOR LAYOUT (1)

PREPARED BY:
BUILDING DROPS, INC.
398 E. DANIA BEACH BLVD. #338
DANIA BEACH, FL 33004
PH: (954) 399-8478 FX: (954) 744-4738

REVISIONS

NO.	DESCRIPTION	BY	DATE

STATE OF FLORIDA
ALEXIS SPYROU
102957
LICENSED
PROFESSIONAL ENGINEER
ALEXIS SPYROU, P.E.
FLORIDA P.E. NO.102957
398 E. DANIA BEACH BLVD. #338
DANIA BEACH, FL 33004
TBPE FIRM #3734

DATE: 12.17.12
DWN: JL
CHK BY: HFN
SCALE: NTS

DWG #: JW024

SHEET: 2 OF 13

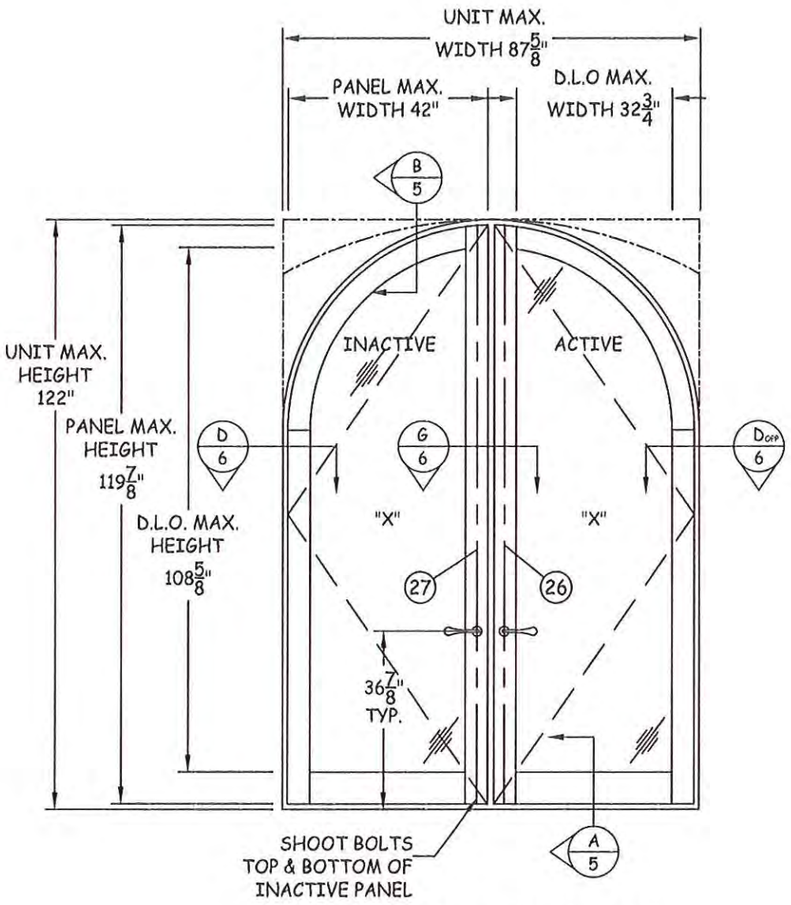

TYPICAL ELEVATION

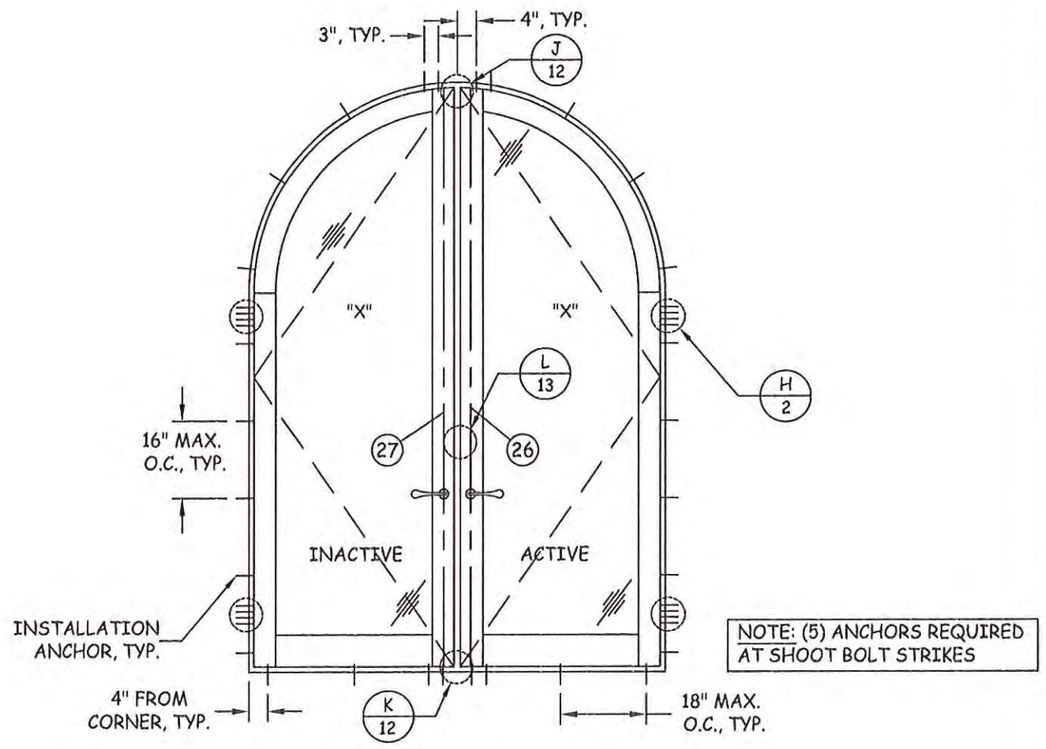

ANCHOR LAYOUT

CONFIGURATION	UNIT WIDTH	UNIT HEIGHT	DESIGN PRESSURE RATING
X-X	87-5/8"	122"	+55.0/-65.0 PSF

NOTE:

1. PRODUCTS SHOWN HEREIN MEET WATER INFILTRATION REQUIREMENTS BASED UPON POSITIVE PRESSURE RATING.
2. SEE SHEET 8 FOR GLAZING OPTIONS AND REQUIREMENTS.
3. RECTANGULAR, FULL RADIUS, AND HALF RADIUS UNITS ARE QUALIFIED AT THE OVERALL SIZE AND DESIGN PRESSURE RATING LISTED ON THIS SHEET.
4. INTERMEDIATE RAILS & OPAQUE, RAISED PANELS ARE QUALIFIED FOR USE AT THE SIZE NOTED ON EITHER FIXED OR OPERABLE PANELS. SEE SHEETS 2 & 4 FOR RAISED PANEL SIZES LIMITATIONS.
5. FULL LITE GLAZED PANELS ARE QUALIFIED FOR USE AT THE SIZE NOTED ON EITHER FIXED OR OPERABLE PANELS.

JELD-WEN WINDOWS & DOORS

JELD-WEN, Inc.
3737 LAKEPORT BOULEVARD
KLAMATH FALLS, OR 97601
PH: (541) 882-3451 FX: (541) 850-2609

TITLE: CUSTOM CLAD 10'0 WOOD OUTSWING DOORS
ELEVATION & ANCHOR LAYOUT (2)

PREPARED BY:
BUILDING DROPS, INC.
398 E. DANIA BEACH BLVD. #338
DANIA BEACH, FL 33004
PH: (954) 399-8478 FX: (954) 744-4738

REVISIONS

NO.	DESCRIPTION	BY	DATE

ALEXIS SPYROPOULOS 102957 LICENSED PROFESSIONAL ENGINEER
STATE OF TEXAS
398 E. DANIA BEACH BLVD. #338
DANIA BEACH, FL 33004
TBPE FIRM #13734

DATE:	DWN BY:	CHK BY:	SCALE:
12.17.12	JLA	HFN	NTS

DWG #: JW024

SHEET: 3 OF 13

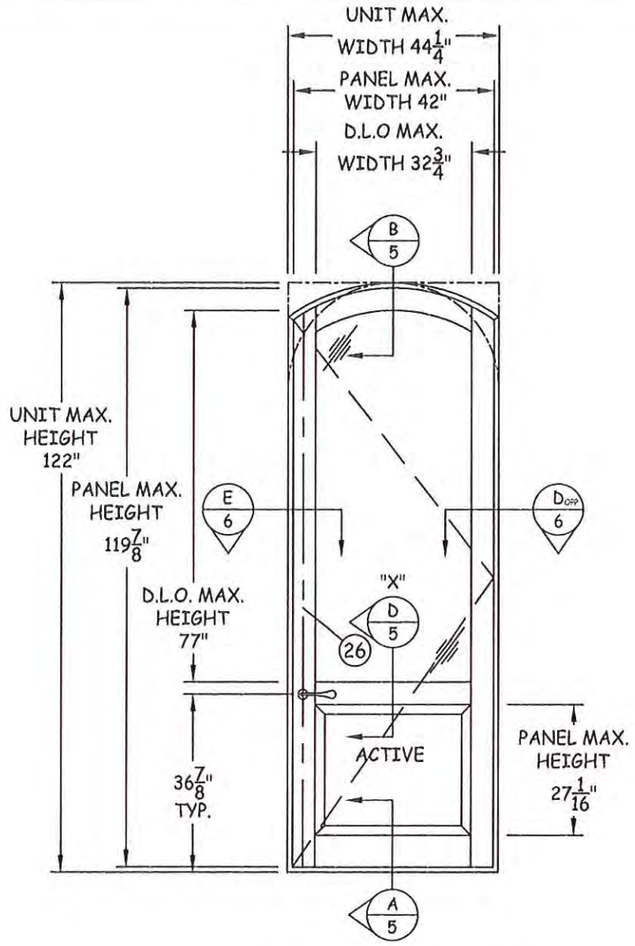

TYPICAL ELEVATION

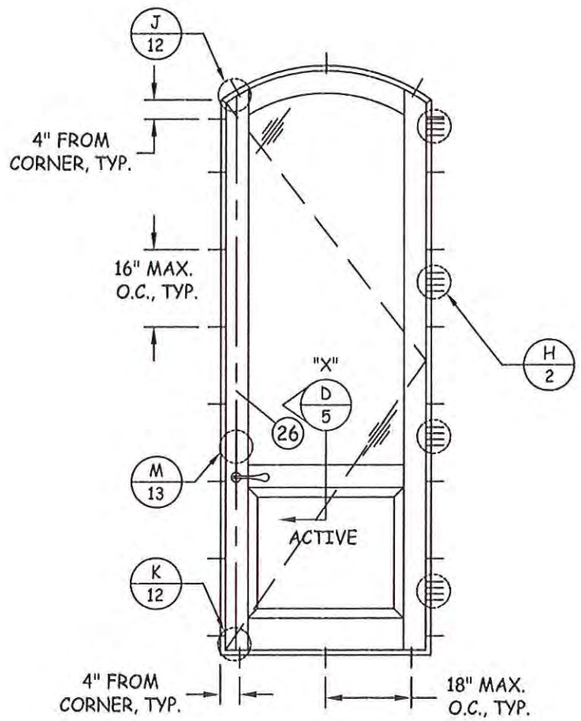

ANCHOR LAYOUT

CONFIGURATION	UNIT WIDTH	UNIT HEIGHT	DESIGN PRESSURE RATING
X O	44-1/4"	122"	+55.0/-65.0 PSF

NOTE:

1. PRODUCTS SHOWN HEREIN MEET WATER INFILTRATION REQUIREMENTS BASED UPON POSITIVE PRESSURE RATING.
2. SEE SHEET 8 FOR GLAZING OPTIONS AND REQUIREMENTS.
3. RECTANGULAR, FULL RADIUS, AND HALF RADIUS UNITS ARE QUALIFIED AT THE OVERALL SIZE AND DESIGN PRESSURE RATING LISTED ON THIS SHEET.
4. INTERMEDIATE RAILS & OPAQUE, RAISED PANELS ARE QUALIFIED FOR USE AT THE SIZE NOTED ON EITHER FIXED OR OPERABLE PANELS.
5. FULL LITE GLAZED PANELS ARE QUALIFIED FOR USE AT THE SIZE NOTED ON EITHER FIXED OR OPERABLE PANELS. SEE SHEETS 2 & 3 FOR FULL LITE D.L.O. SIZE LIMITATIONS.

JELD-WEN
WINDOWS & DOORS

JELD-WEN, inc.
3737 LAKEPORT BOULEVARD
KLAMATH FALLS, OR 97601
PH: (541) 882-3451 FX: (541) 850-2609

TITLE: CUSTOM CLAD 10'0 WOOD OUTSWING DOORS
ELEVATIONS & ANCHOR LAYOUTS (3)

PREPARED BY:
BUILDING DROPS, INC.
398 E. DANIA BEACH BLVD. #338
DANIA BEACH, FL 33004
PH: (954) 399-8478 FX: (954) 744-4738

REVISIONS

NO.	DESCRIPTION	BY	DATE

STATE OF TEXAS
ALEXIS SPYRO
102957
LICENSED
PROFESSIONAL ENGINEER

DATE: 12.17.12
DWN BY: JLA
CHK BY: HFN
SCALE: NTS

DWG #: JW024

SHEET: 4 OF 13

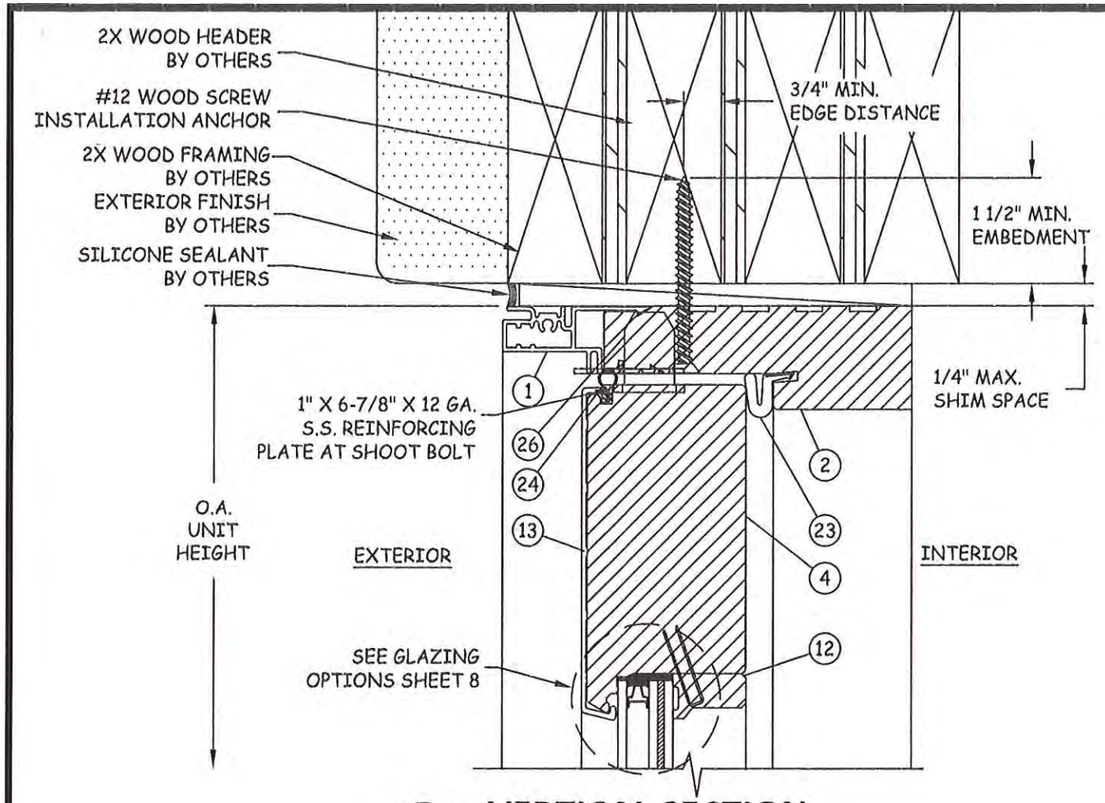

B/5 VERTICAL SECTION
HEAD - 2X WOOD FRAMING
THROUGH FRAME INSTALLATION, TYP.

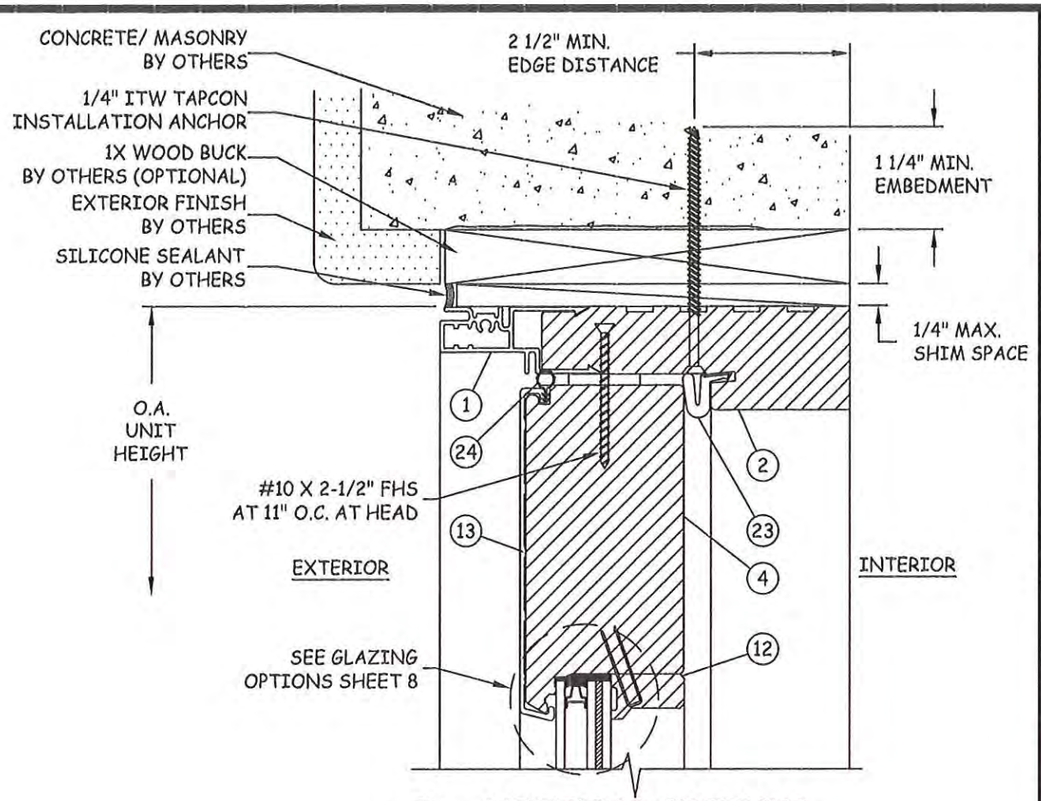

C/5 VERTICAL SECTION
FIXED HEAD - CONCRETE/MASONRY
THROUGH FRAME INSTALLATION, TYP.

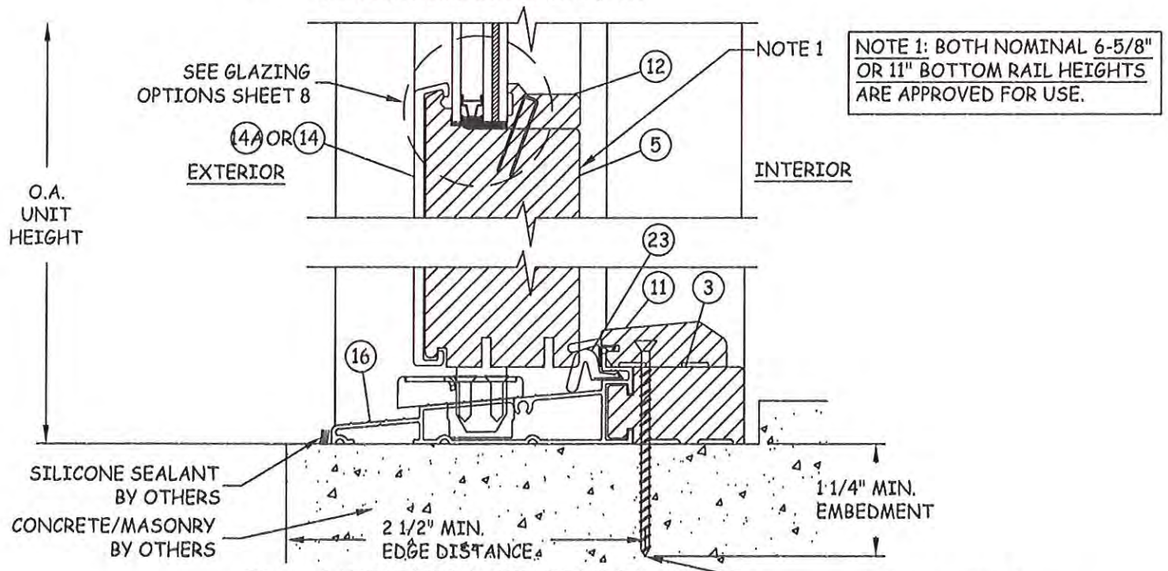

NOTE 1: BOTH NOMINAL 6-5/8" OR 11" BOTTOM RAIL HEIGHTS ARE APPROVED FOR USE.

A/5 VERTICAL SECTION
SILL - CONCRETE/MASONRY
THROUGH FRAME INSTALLATION, TYP.

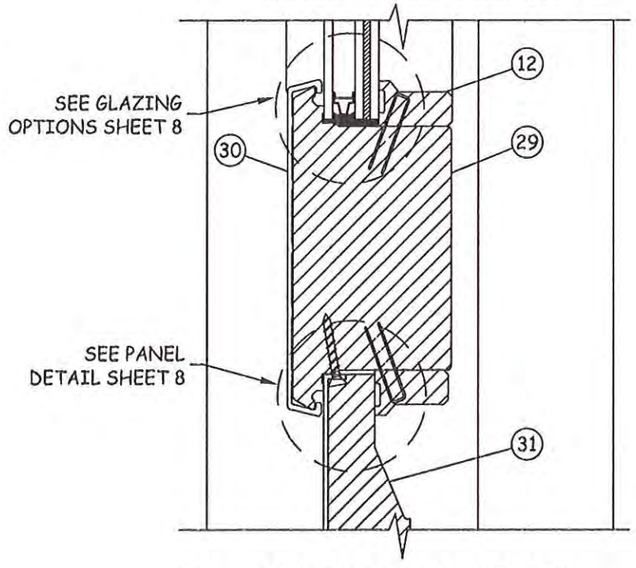

D/5 VERTICAL SECTION
INTERMEDIATE RAIL, TYP.

JELD-WEN WINDOWS & DOORS
JELD-WEN, Inc.
3737 LAKEPORT BOULEVARD
KLAMATH FALLS, OR 97601
PH: (541) 882-3451 FX: (541) 850-2609

TITLE: CUSTOM CLAD 10'0 WOOD OUTSWING DOORS VERTICAL SECTIONS

PREPARED BY:
BUILDING DROPS, INC.
398 E. DANIA BEACH BLVD. #338
DANIA BEACH, FL 33004
PH: (954) 399-8478 FX: (954) 744-4738

REVISIONS

NO.	DESCRIPTION	BY	DATE

STATE OF TEXAS
ALEXIS SPYROPOULOS
102957
LICENSED
PROFESSIONAL ENGINEER
3398 E. DANIA BEACH BLVD. #338
DANIA BEACH, FL 33004
TBPE FIRM #13734

DATE: 12.17.12 | DWN BY: JLA | CHK BY: HFN | SCALE: NTS

DWG #: JW024

SHEET: 5 OF 13

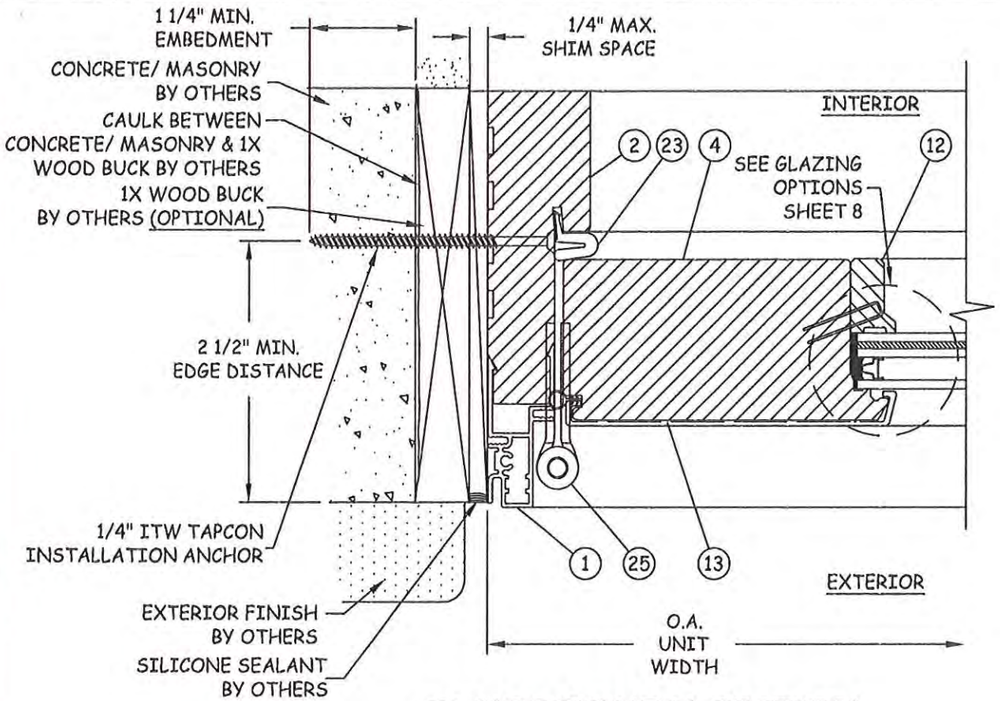

D/6 HORIZONTAL SECTION

HINGE JAMB-CONCRETE/MASONRY
THROUGH FRAME INSTALLATION, TYP.

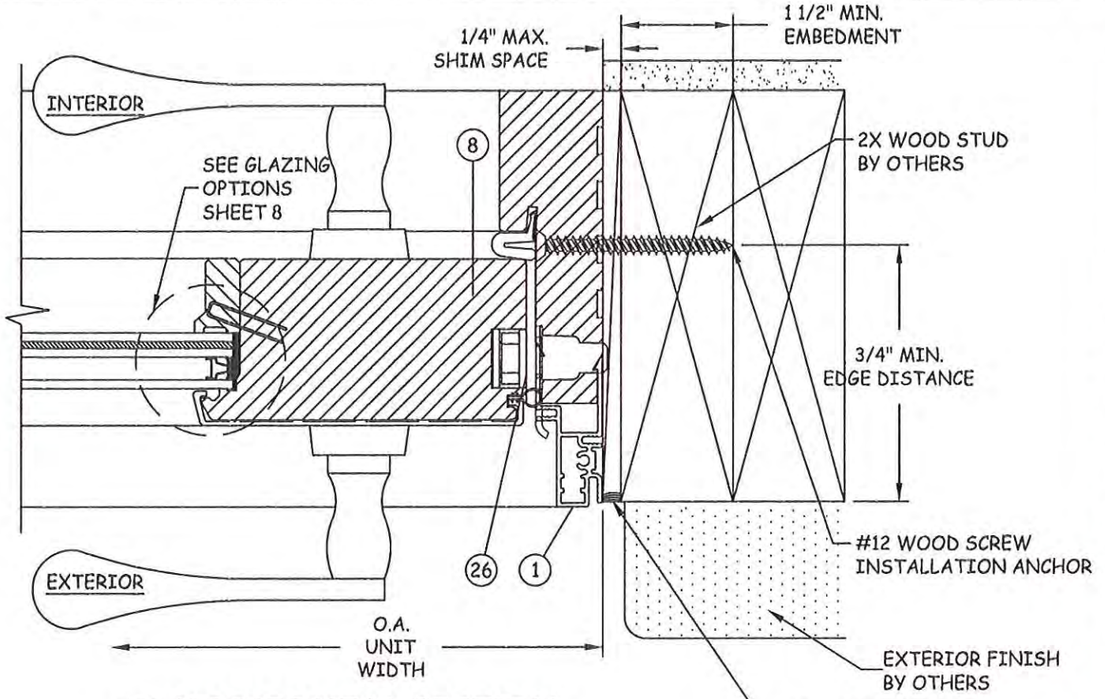

E/6 HORIZONTAL SECTION

LOCK JAMB-2X WOOD FRAME
THROUGH FRAME INSTALLATION, TYP.

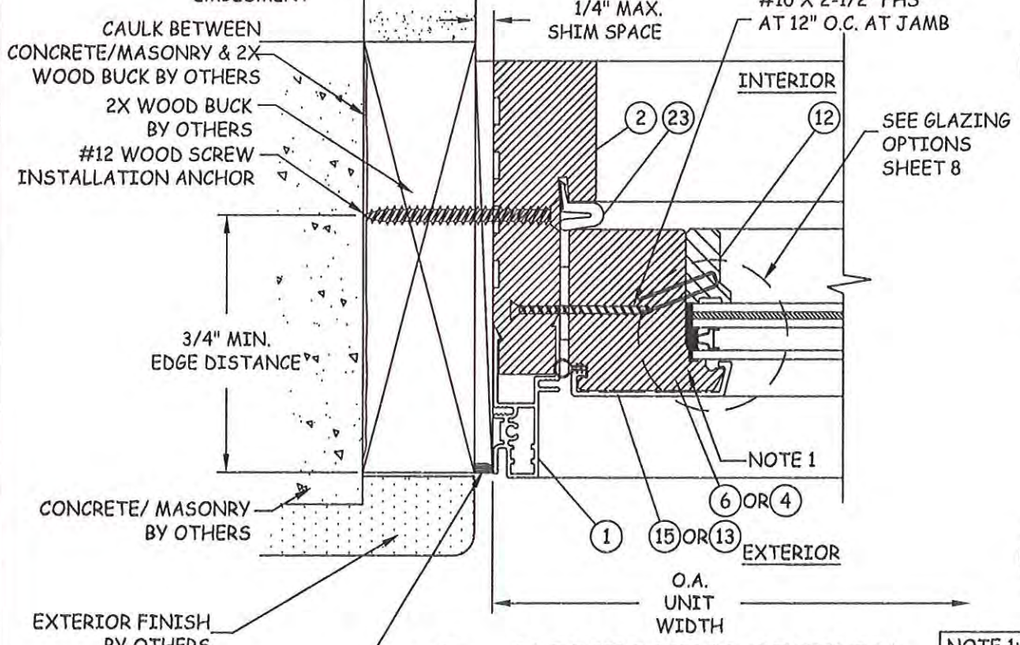

F/6 HORIZONTAL SECTION

SIDELITE JAMB - 2X WOOD BUCK
THROUGH FRAME INSTALLATION, TYP.

NOTE 1: BOTH STANDARD OR ALTERNATE FIXED STILES ARE APPROVED FOR USE.

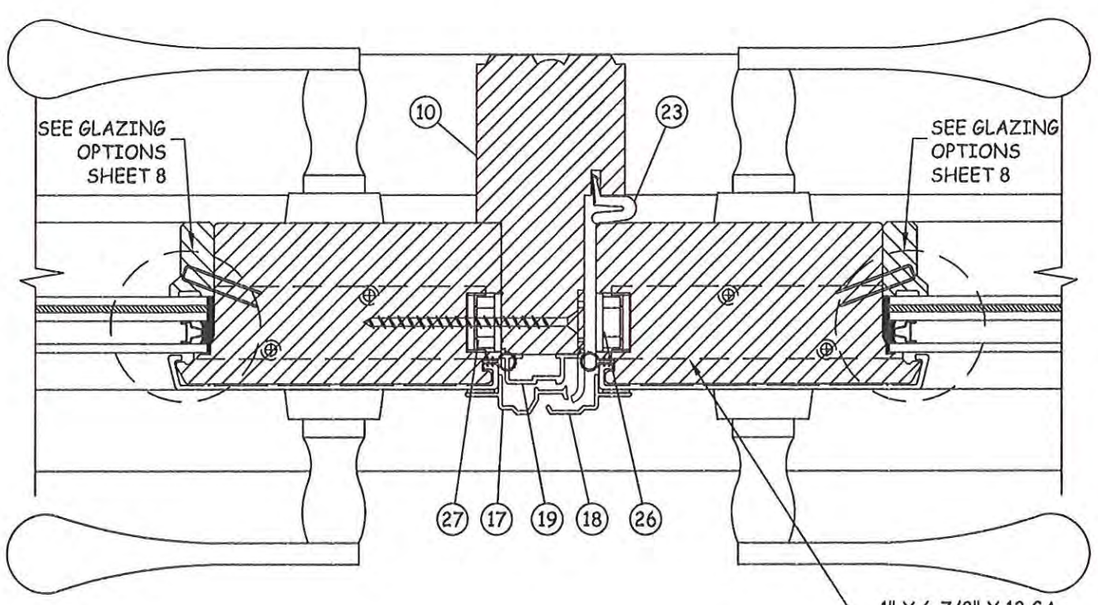

G/6 HORIZONTAL SECTION

ASTRAGAL

JELD-WEN WINDOWS & DOORS
JELD-WEN, Inc.
3737 LAKEPORT BOULEVARD
KLAMATH FALLS, OR 97601
PH: (541) 882-3451 FX: (541) 850-2609

TITLE: CUSTOM CLAD 10'0 WOOD OUTSWING DOORS
HORIZONTAL SECTIONS

PREPARED BY:
BUILDING DROPS, INC.
398 E. DANIA BEACH BLVD. #338
DANIA BEACH, FL 33004
PH: (954) 399-8478 FX: (954) 744-4738

REVISIONS

NO.	DESCRIPTION	BY	DATE

STATE OF TEXAS
ALEXIS SPYROU
102957
LICENSED
PROFESSIONAL ENGINEER
TEXAS P.E. NO. 102957
398 E. DANIA BEACH BLVD.
DANIA BEACH, FL 33004
TBPE FIRM #13734

DATE: 12.17.12
DWN BY: JLA
CHK BY: HFN
SCALE: NTS

DWG #: JW024

SHEET: 6 OF 13

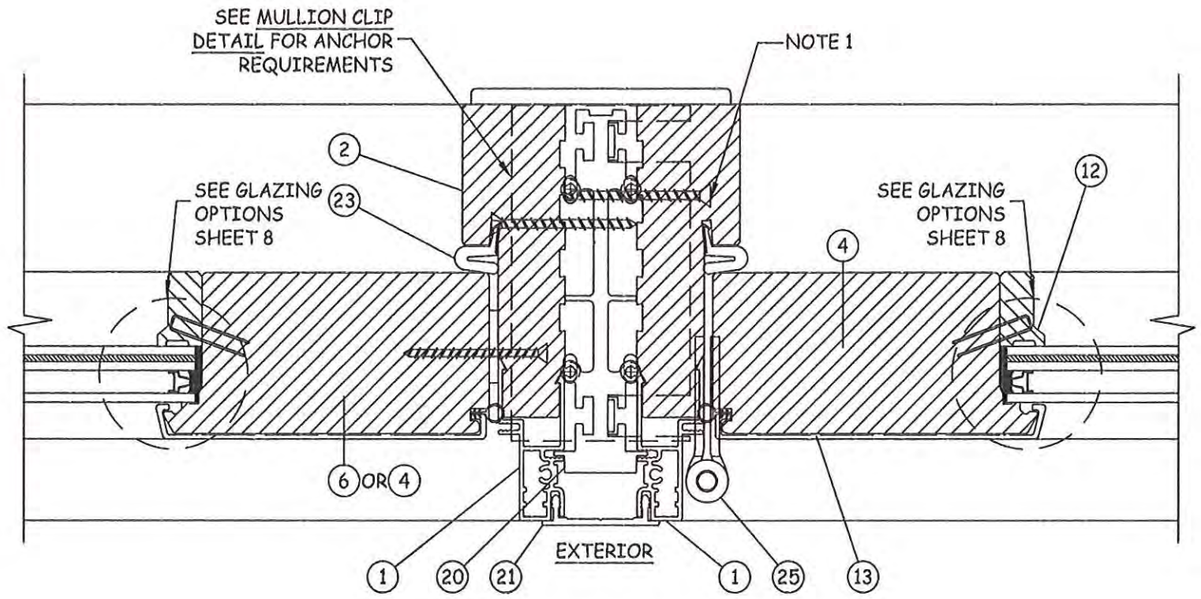

H/7 **HORIZONTAL SECTION**

VERTICAL MULLION, TYP.

NOTE 1: FASTEN DOOR FRAMES TO MULLIONS USING #10 X 2-1/2" FH WOOD SCREWS AT 8" O.C. MAX. TYP.

NOTE:
1. 1X WOOD BUCK BY OTHERS IS OPTIONAL FOR MASONRY APPLICATIONS
2. NO FASTENERS REQUIRED IN EXTERIOR OF PLATE AT SILL

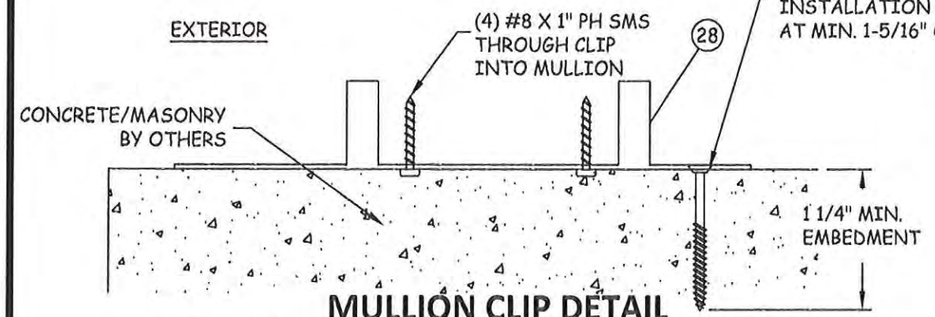

MULLION CLIP DETAIL

ALT. CONNECTION TO CONCRETE/MASONRY

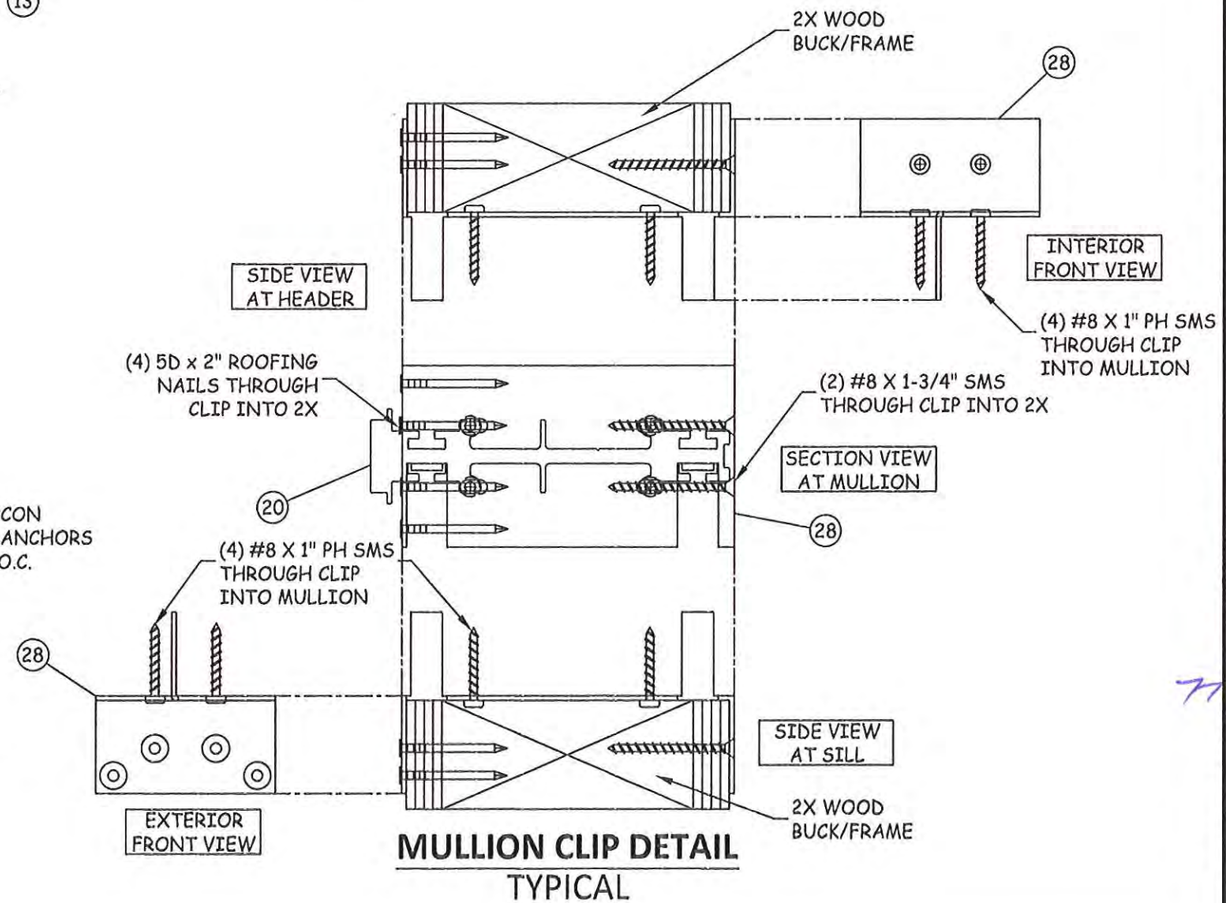

MULLION CLIP DETAIL

TYPICAL

JELD-WEN WINDOWS & DOORS

JELD-WEN, inc.
3737 LAKEPORT BOULEVARD
KLAMATH FALLS, OR 97601
PH: (541) 882-3451 FX: (541) 850-2609

TITLE: CUSTOM CLAD 10'0 WOOD OUTSWING DOORS
HORIZONTAL SECTIONS & MULLION CLIP DETAIL

PREPARED BY:
BUILDING DROPS, INC.
398 E. DANIA BEACH BLVD. #338
DANIA BEACH, FL 33004
PH: (954) 399-8478 FX: (954) 744-4738

REVISIONS

NO.	DESCRIPTION	BY	DATE

STATE OF TEXAS
ALEXIS SPYROU
102957
LICENSED
PROFESSIONAL ENGINEER
ALEXIS SPYROU, P.E. NO. 102957
398 E. DANIA BEACH BLVD. #338
DANIA BEACH, FL 33004
TBPE FIRM # 5734

DATE:	DWN BY:	CHK BY:	SCALE:
12.17.12	JLA	HFN	NTS

DWG #: JW024

SHEET: 7 OF 13

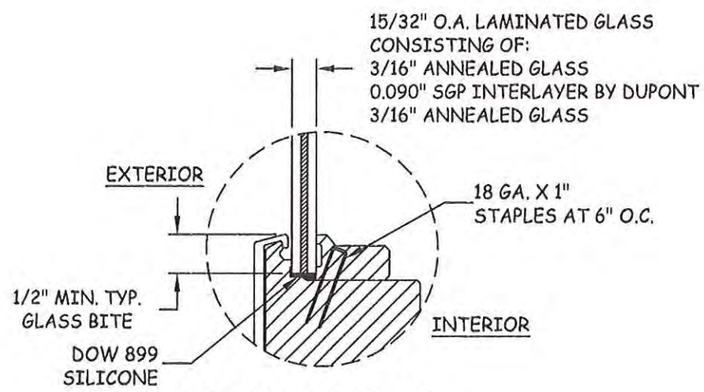

GLAZING DETAIL 1

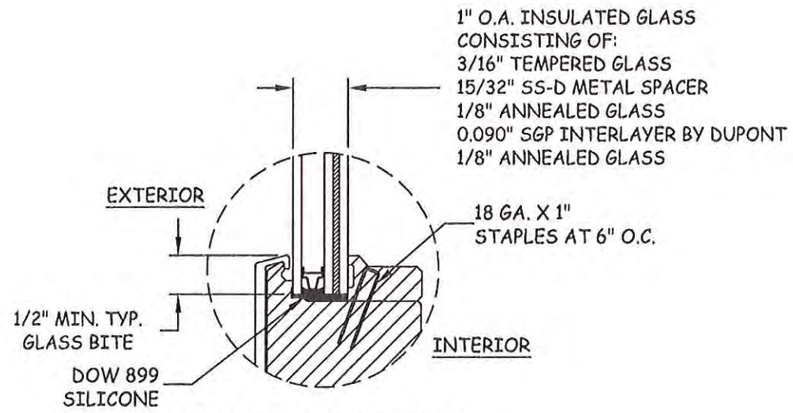

GLAZING DETAIL 2

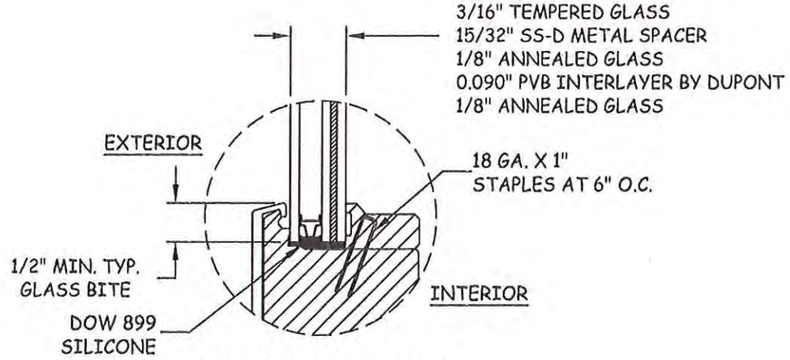

GLAZING DETAIL 3

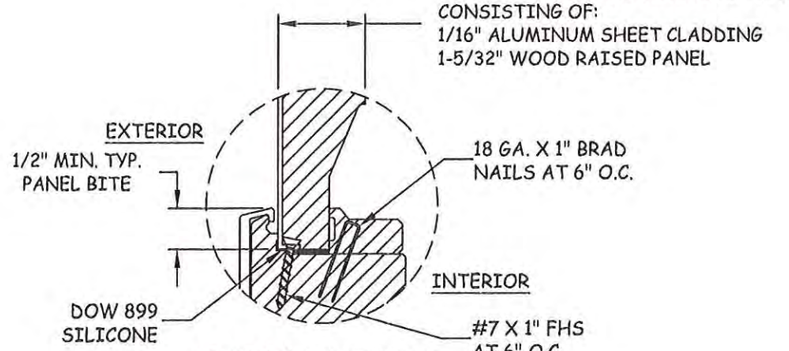

PANEL DETAIL 1

NOTE:
ALL GLAZING CONFIGURATIONS SHALL COMPLY WITH SAFETY GLAZING REQUIREMENTS OUTLINED IN 2010 FBC SECTION 2406.

JELD-WEN WINDOWS & DOORS
JELD-WEN, inc.
3737 LAKEPORT BOULEVARD
KLAMATH FALLS, OR 97601
PH: (541) 882-3451 FX: (541) 850-2609

TITLE: CUSTOM CLAD 10'0 WOOD OUTSWING DOORS GLAZING & RAISED PANEL DETAILS

PREPARED BY:
BUILDING DROPS, INC.
398 E. DANIA BEACH BLVD. #338
DANIA BEACH, FL 33004
PH: (954) 399-8478 FX: (954) 744-4738

REVISIONS

NO.	DESCRIPTION	BY	DATE

STATE OF TEXAS
ALEXIS SPYROU
102957
LICENSED
PROFESSIONAL ENGINEER
398 E. DANIA BEACH BLVD. #338
DANIA BEACH, FL 33004
TBPE FIRM #13734

DATE: 12.17.12 | DWN BY: JLA | CHK BY: HFN | SCALE: NTS

DWG #: JW024

SHEET: 8 OF 13

BILL OF MATERIALS

ITEM NO.	DESCRIPTION	PART NUMBER	MATERIAL	MANUFACTURER
1	FRAME CLADDING	---	ALUMINUM	JELD-WEN
2	FRAME JAMB	---	WOOD	JELD-WEN
3	SILL FRAME	---	WOOD	JELD-WEN
4	TOP RAIL/STILE	---	WOOD	JELD-WEN
5	BOTTOM RAIL	---	WOOD	JELD-WEN
6	TRANSOM RAIL	---	WOOD	JELD-WEN
7	RAIL/STILE	---	WOOD	JELD-WEN
8	LOCK STILE	---	WOOD	JELD-WEN
9	ASTRAGAL	---	WOOD	JELD-WEN
10	ASTRAGAL CAP	---	WOOD	JELD-WEN
11	SILL CAP	---	WOOD	JELD-WEN
12	GLASS STOP	---	WOOD	JELD-WEN
13	RAIL/STILE CLADDING	---	ALUMINUM	JELD-WEN
14	BOTTOM RAIL CLADDING	---	ALUMINUM	JELD-WEN
15	TRANSOM RAIL CLADDING	---	ALUMINUM	JELD-WEN
16	SILL CLADDING	---	ALUMINUM	JELD-WEN
17	INACTIVE ASTRAGAL ADAPTOR	---	ALUMINUM	JELD-WEN
18	ACTIVE ASTRAGAL ADAPTOR	---	ALUMINUM	JELD-WEN
19	ASTRAGAL CLADDING	---	ALUMINUM	JELD-WEN
20	MULLION	---	ALUMINUM	JELD-WEN
21	MULLION CAP	---	ALUMINUM	JELD-WEN
22	NOT USED	---	---	---
23	WEATHERSTRIPPING	---	FOAM	SCHLEGEL
24	BULB GASKET	---	PVC	INTEK
25	HINGE	---	SS	JELD-WEN
26	MULTIPOINT LOCK	---	SS	ASHLAND
27	SHOOT BOLTS	---	SS	ASHLAND
28	MULLION CLIP	---	GALV. STEEL	JELD-WEN
29	INTERMEDIATE RAIL	---	WOOD	JELD-WEN
30	INTERMEDIATE RAIL CLADDING	---	ALUMINUM	JELD-WEN
31	RAISED PANEL	---	WOOD	JELD-WEN

NOTE: ALL WOOD COMPONENTS ARE PRESSURE TREATED PINE.

1 FRAME CLADDING ALUMINUM 6063-T5

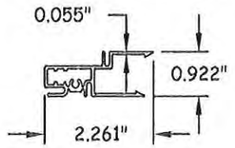

2 FRAME JAMB WOOD

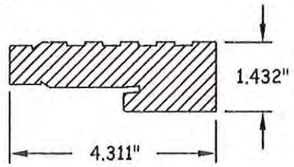

3 SILL FRAME WOOD

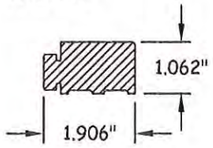

4 TOP RAIL/STILE WOOD

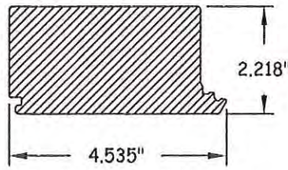

5 STD. BOTTOM RAIL WOOD

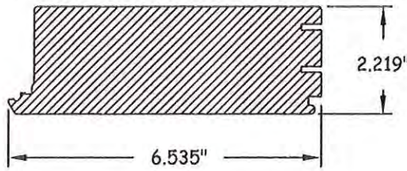

6 ALT. SIDELITE STILE WOOD

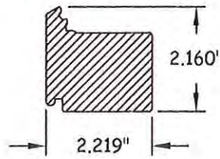

8 LOCK STILE WOOD

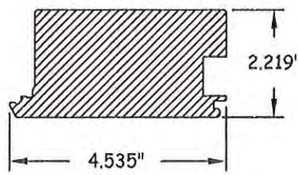

9 HIGH BOTTOM RAIL WOOD

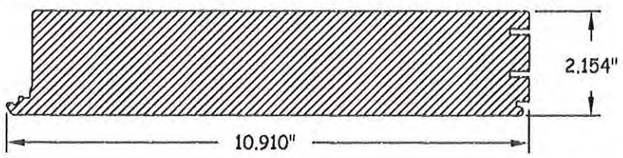

10 ASTRAGAL WOOD

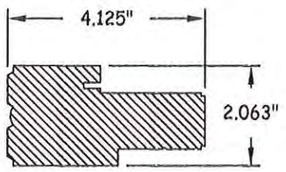

11 SILL CAP WOOD

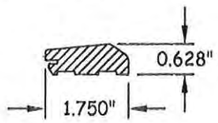

12 GLASS STOP WOOD

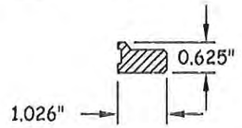

JELD-WEN WINDOWS & DOORS
JELD-WEN, Inc.
3737 LAKEPORT BOULEVARD
KLAMATH FALLS, OR 97601
PH: (541) 882-3451 FX: (541) 850-2609

TITLE: CUSTOM CLAD 10'0 WOOD OUTSWING DOORS COMPONENTS & BILL OF MATERIALS

PREPARED BY:
BUILDING DROPS, INC.
398 E. DANIA BEACH BLVD. #338
DANIA BEACH, FL 33004
PH: (954) 399-8478 FX: (954) 744-4738

REVISIONS

NO.	DESCRIPTION	BY	DATE

STATE OF TEXAS
ALEXIS SPYROU
102957
LICENSED PROFESSIONAL ENGINEER
ALEXIS SPYROU, P.E.
TEXAS P.E. NO. 102957
398 E. DANIA BEACH BLVD. #338
DANIA BEACH, FL 33004
TBPE FIRM #13734

DATE: 12.17.12 | DWN BY: JLA | CHK BY: HFN | SCALE: NTS

DWG #: JW024

SHEET: 9 OF 13

13 RAIL/STILE CLADDING ALUMINUM 6063-T5

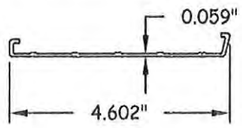

14 BOTTOM RAIL CLADDING ALUMINUM 6063-T5

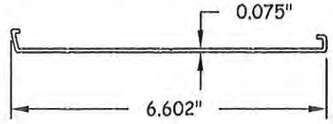

14A HIGH BOTTOM RAIL CLADDING ALUMINUM 6063-T5

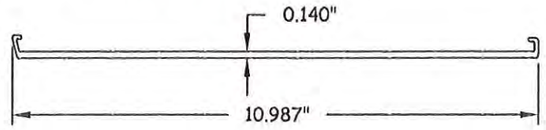

15 SIDELITE STILE CLADDING ALUMINUM 6063-T5

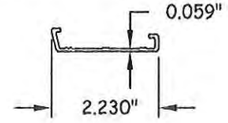

16 SILL CLADDING ALUMINUM 6063-T5

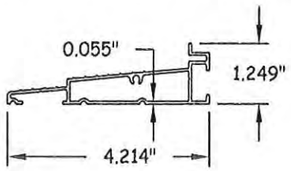

17 INACTIVE ASTRAGAL ADAPTOR ALUMINUM 6063-T5

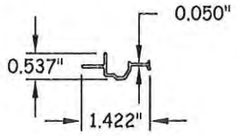

18 ACTIVE ASTRAGAL ADAPTOR ALUMINUM 6063-T5

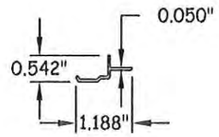

19 ASTRAGAL CLADDING ALUMINUM 6063-T5

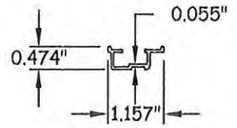

20 MULLION ALUMINUM 6063-T5

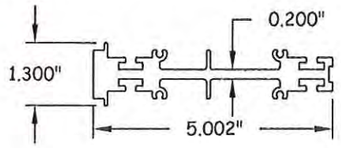

21 MULLION CAP ALUMINUM 6063-T5

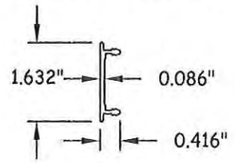

23 WEATHERSTRIPPING FOAM

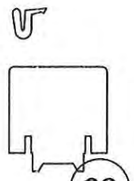

24 BULB GASKET PVC

25 HINGE SS

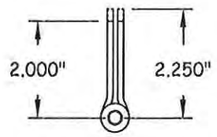

QUALIFIED HINGES:
- 4-1/2" BUTT HINGE

28 MULLION CLIP 0.070" THK. GALV. STEEL

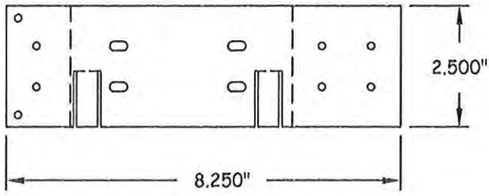

29 INTERMEDIATE RAIL WOOD

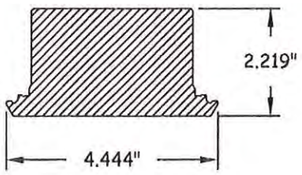

30 INTERMEDIATE RAIL CLADDING WOOD

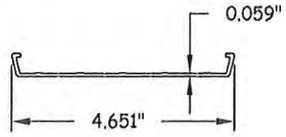

31 RAISED PANEL WOOD

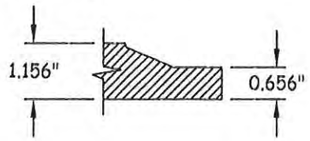

JELD-WEN WINDOWS & DOORS

JELD-WEN, inc.
3737 LAKEPORT BOULEVARD
KLAMATH FALLS, OR 97601
PH: (541) 882-3451 FX: (541) 850-2609

TITLE: CUSTOM CLAD 10'0 WOOD OUTSWING DOORS COMPONENTS

PREPARED BY:
BUILDING DROPS, INC.
398 E. DANIA BEACH BLVD. #338
DANIA BEACH, FL 33004
PH: (954) 399-8478 FX: (954) 744-4738

REVISIONS

NO.	DESCRIPTION	BY	DATE

STATE OF TEXAS
ALEXIS SPYROU
102957
LICENSED
PROFESSIONAL ENGINEER

ALEXIS SPYROU, P.E.
TEXAS LICENSE #102957
398 E. DANIA BEACH BLVD. #338
DANIA BEACH, FL 33004
TBPE FIRM #13734

7/16/12

DATE:	DWN BY:	CHK BY:	SCALE:
12.17.12	JLA	HFN	NTS

DWG #: JW024

SHEET: 10 OF 13

TYPICAL QUALIFIED CONFIGURATIONS

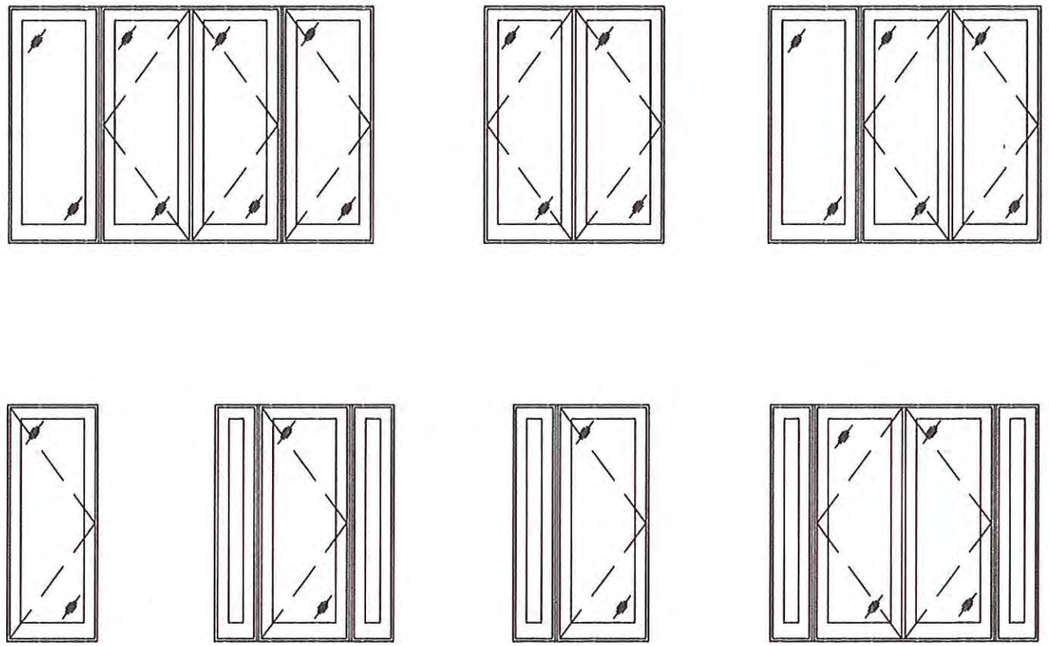

NOTES:

1. CONFIGURATIONS SHOWN ARE TYPICAL AND FOR ILLUSTRATION PURPOSES ONLY.
2. ALL QUALIFIED CONFIGURATIONS SHALL ADHERE TO THE MAXIMUM LISTED SIZES AND PRESSURES IN THIS APPROVAL.
3. ARCHED UNITS ARE ALLOWABLE AND SHALL BE INSCRIBED INTO THE MAXIMUM RECTANGULAR AREA LISTED IN THE APPROVAL.

JELD-WEN WINDOWS & DOORS

JELD-WEN, inc.
3737 LAKEPORT BOULEVARD
KLAMATH FALLS, OR 97601
PH: (541) 882-3451 FX: (541) 850-2609

TITLE: CUSTOM CLAD 10'0 WOOD OUTSWING DOORS
TYP. QUALIFIED CONFIGURATIONS

PREPARED BY:
BUILDING DROPS, INC.
398 E. DANIA BEACH BLVD. #338
DANIA BEACH, FL 33004
PH: (954) 399-8478 FX: (954) 744-4738

REVISIONS

NO.	DESCRIPTION	BY	DATE

STATE OF TEXAS
ALEXIS SPYROU
102957
LICENSED PROFESSIONAL ENGINEER
ALEXIS SPYROU, P.E.
TEXAS P.E. NO. 102957
398 E. DANIA BEACH BLVD. #338
DANIA BEACH, FL 33004
TBPE FIRM #13734

7/14/14

DATE: 12.17.12
DWN BY: JLA
CHK BY: HFN
SCALE: NTS

DWG #: JW024

SHEET: 11 OF 13

PAIR DOORS

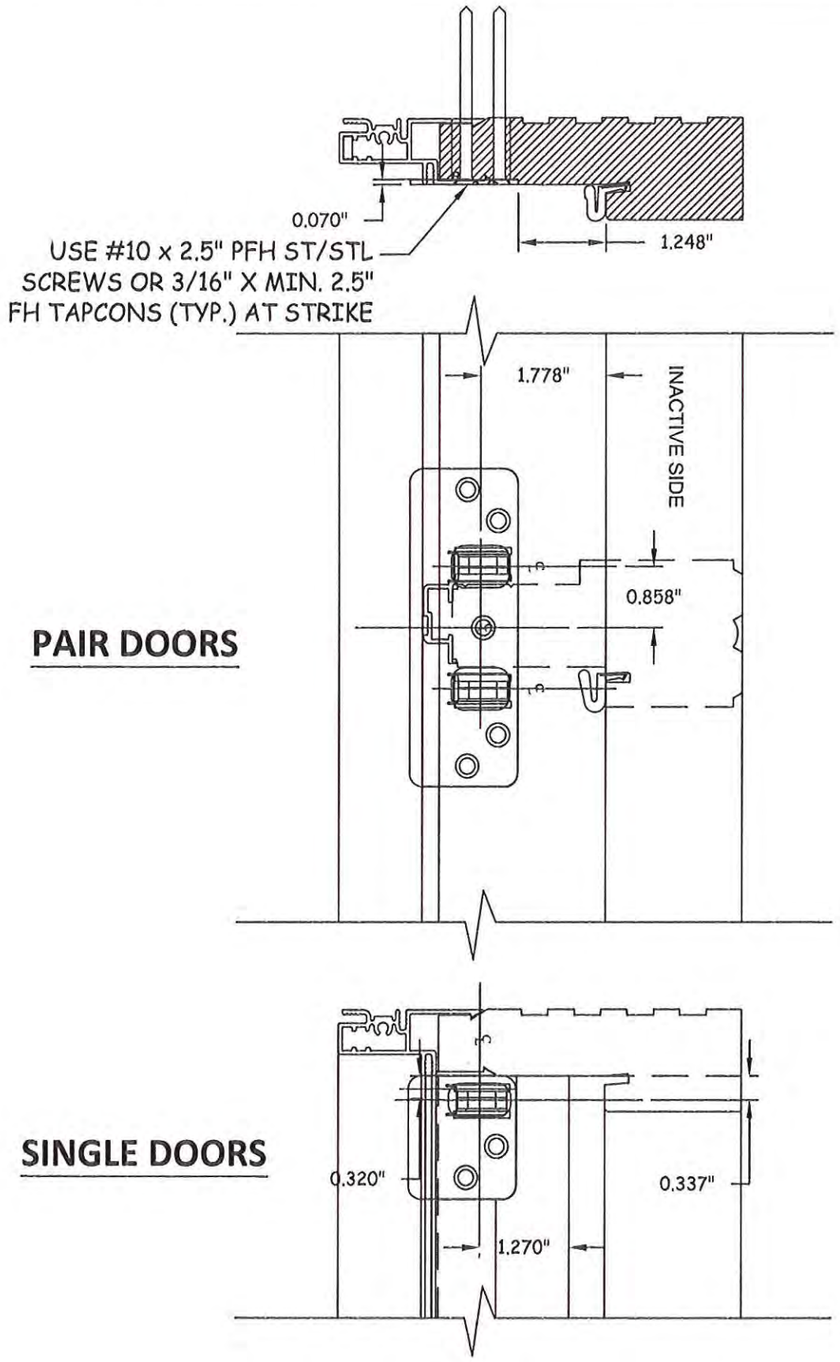

SINGLE DOORS

J/12 TYP. SHOOT BOLT STRIKE DETAIL
AT HEAD

SINGLE DOORS

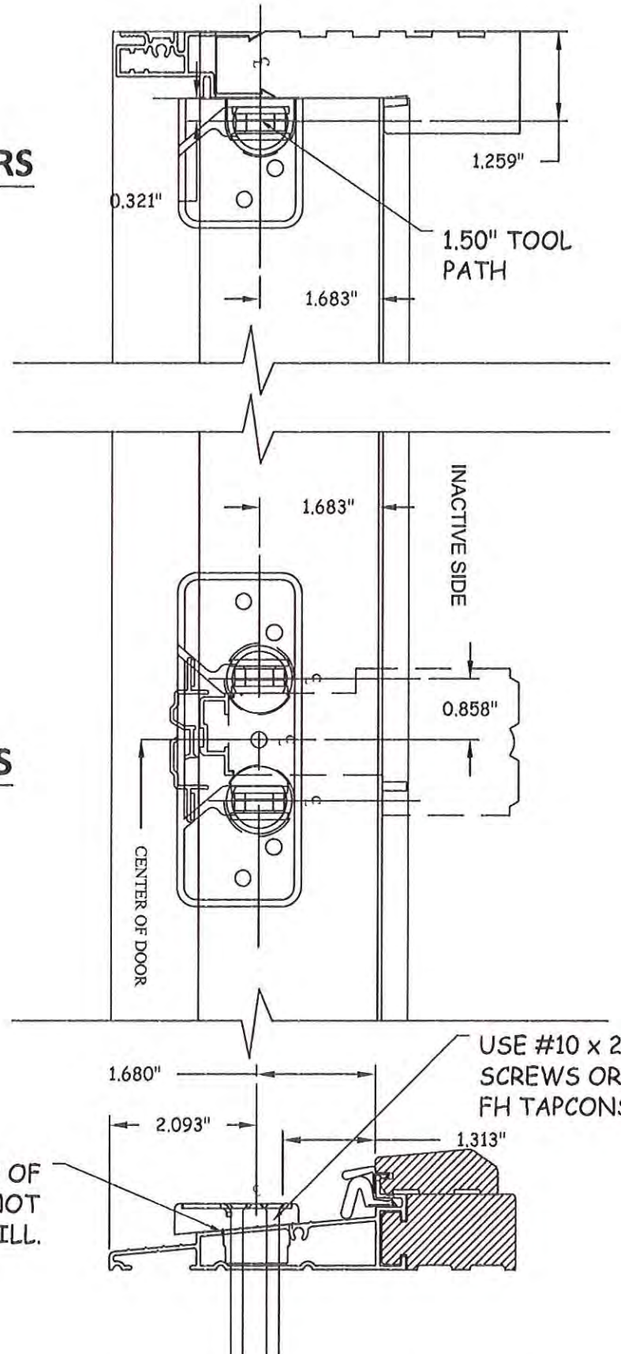

PAIR DOORS

K/12 TYP. SHOOT BOLT STRIKE DETAIL
AT THRESHOLD

JELD-WEN WINDOWS & DOORS

JELD-WEN, inc.
3737 LAKEPORT BOULEVARD
KLAMATH FALLS, OR 97601
PH: (541) 882-3451 FX: (541) 850-2609

TITLE: CUSTOM CLAD 10'0 WOOD OUTSWING DOORS SHOOT BOLT STRIKE DETAILS

PREPARED BY:
BUILDING DROPS, INC.
398 E. DANIA BEACH BLVD. #338
DANIA BEACH, FL 33004
PH: (954) 399-8478 FX: (954) 744-4738

REVISIONS

NO.	DESCRIPTION	BY	DATE

ALEXIS SPYROU 102957 LICENSED PROFESSIONAL ENGINEER STATE OF FLORIDA

11/14

DATE: 12.17.12 | DWN BY: JLA | CHK BY: HFN | SCALE: NTS

DWG #: JW024

SHEET: 12 OF 13

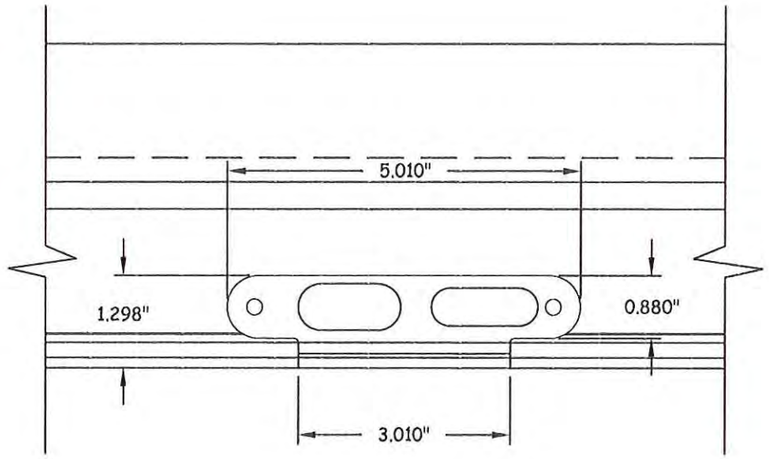

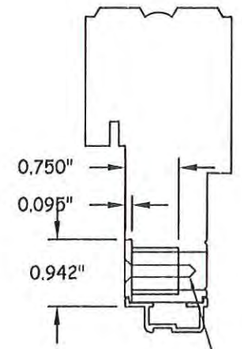

USE (2) #10 x 1" PFH ST/STL SCREWS (TYP.) AT STRIKE

L/13 TYP. LATCH & DEADBOLT STRIKE

AT ASTRAGAL

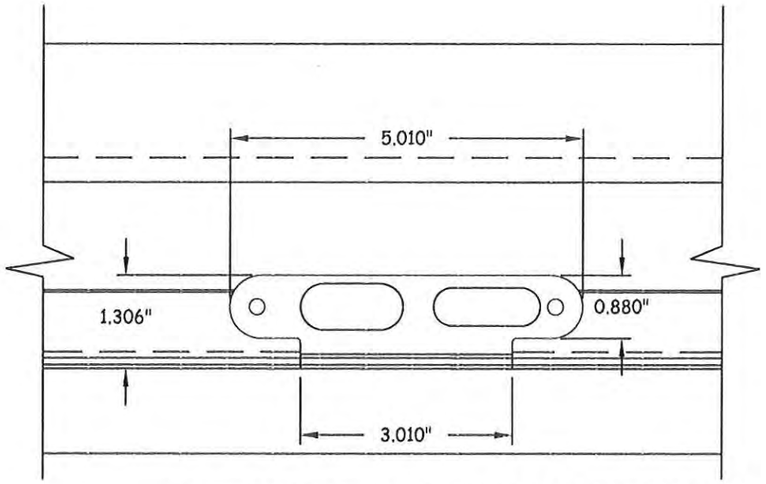

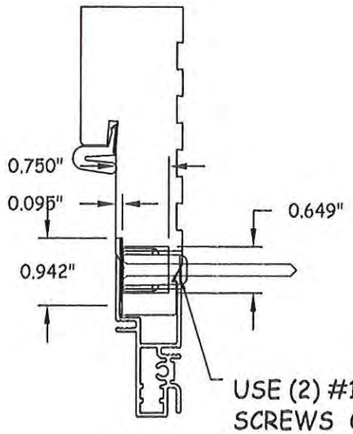

USE (2) #10 x 2.5" PFH ST/STL SCREWS OR (2) 3/16" X MIN. 2.5" FH TAPCONS (TYP.) AT STRIKE

M/13 TYP. LATCH & DEADBOLT STRIKE

AT JAMB FRAME

JELD-WEN WINDOWS & DOORS

JELD-WEN, inc.
3737 LAKEPORT BOULEVARD
KLAMATH FALLS, OR 97601
PH: (541) 882-3451 FX: (541) 850-2609

TITLE: CUSTOM CLAD 10'0 WOOD OUTSWING DOORS
LATCH & DEADBOLT STRIKE DETAILS

PREPARED BY:
BUILDING DROPS, INC.
398 E. DANIA BEACH BLVD. #338
DANIA BEACH, FL 33004
PH: (954) 399-8478 FX: (954) 744-4738

REVISIONS

NO.	DESCRIPTION	BY	DATE

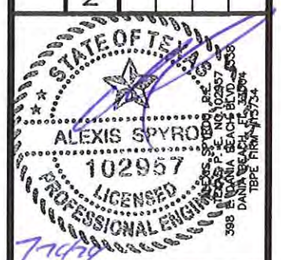

DATE: 12.17.12
DWN BY: JLA
CHK BY: HFN
SCALE: NTS

DWG #: JW024

SHEET: 13 OF 13