ODL
215 EAST ROOSEVELT AVE.
ZEELAND, MI 49464

FIBERGLASS SIDELITE
INSWING
"IMPACT"

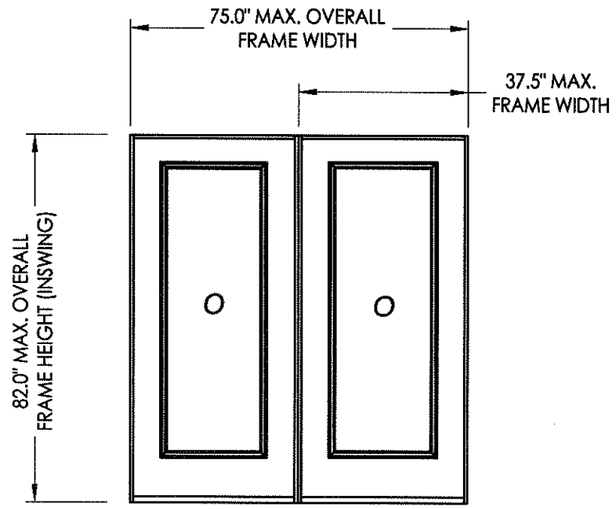

EVALUATED FOR USE IN THE STATE OF TEXAS

The Fiberglass Glazed Sidelite described herein complies with the 2006 International Residential Code (IRC), Sections R301 & R613 and the 2006 International Building Code (IBC), Sections 1405.12, 1609, 1714.5, 2403 and 2404 (including Texas revisions) subject to the following conditions:

1. Anchors shall be as listed and spaced as shown in the details. Anchor embedment to base material shall be beyond wall dressing or stucco.
2. This system has been tested and evaluated as a large missile impact protective system for installation in the Seaward, Inland I and Inland II areas. This product meets missile level "D" as defined in ASTM E 1996.
3. Allowable design pressure requirements must be equal to or less than the design pressure rating shown in the design pressure chart, sheet 1 of this drawing.
4. Conditions not covered by this drawing are subject to further engineering analysis.

TABLE OF CONTENTS	
SHEET #	DESCRIPTION
1	Typical elevations, design pressures & general notes
2	Sidelite panel details
3	Lite frame and glazing details
4	Horizontal & vertical cross sections
5	Frame anchoring
6	Bill of materials & components

CONFIGURATION	MAX. FRAME DIMENSION	DESIGN PRESSURE (PSF) INSWING	
		POSITIVE	NEGATIVE
OO	75.0" x 82.0"	+45.0	-50.0

STATE OF TEXAS
LYNDON F. SCHMIDT
104123
LICENSED
PROFESSIONAL ENGINEER
7-16-14

Documents Prepared By: Lyndon F. Schmidt, P.E.
TEXAS P.E. #104123
RW BUILDING CONSULTANTS, INC.
P.O. Box 230 Valrico FL. 33595
Phone No.: 813.659.9197
TEXAS BOARD OF PROFESSIONAL ENGINEERS
CERTIFICATE OF REGISTRATION # F-11852

PRODUCT: FIBERGLASS SIDELITE
PART OR ASSEMBLY: TYPICAL ELEVATION, DESIGN PRESSURES & GENERAL NOTES

REVISIONS

NO.	DATE	BY

DATE: 9/16/13
SCALE: N.T.S.
DWG. BY: JK
CHK. BY: LFS
DRAWING NO.: TX-4382
SHEET 1 OF 6

© 2013 R.W. BUILDING CONSULTANTS INC.

R:\A - Projects\Project Folders\Proj 1701 - 1800\PF 1718\D. RWBC Drawings\ODL Plastpro\TX-4382.dwg, TX-4382

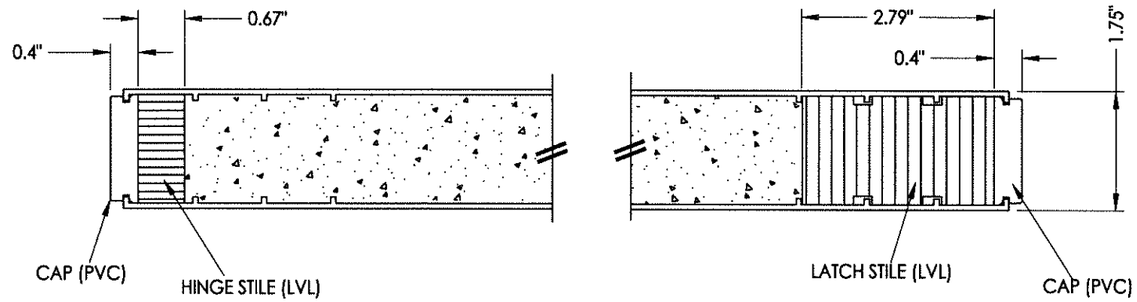

1/2 **HORIZONTAL CROSS SECTION**

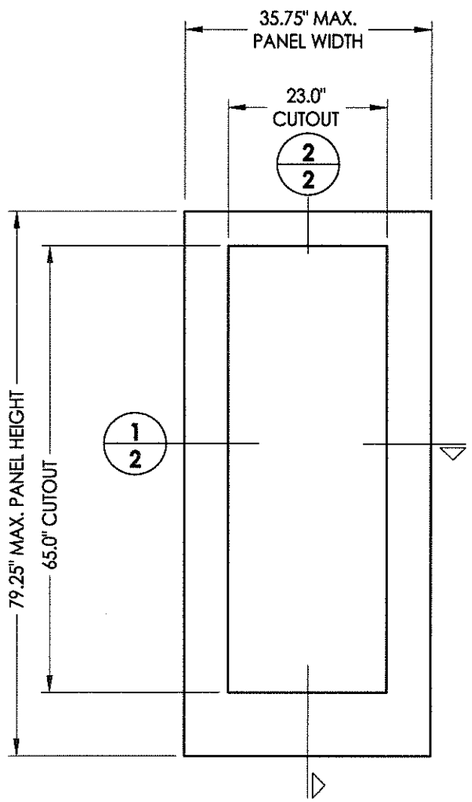

50 **SIDELITE PANEL**
Fiberglass (Plastpro)

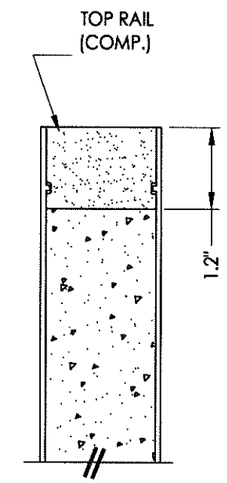

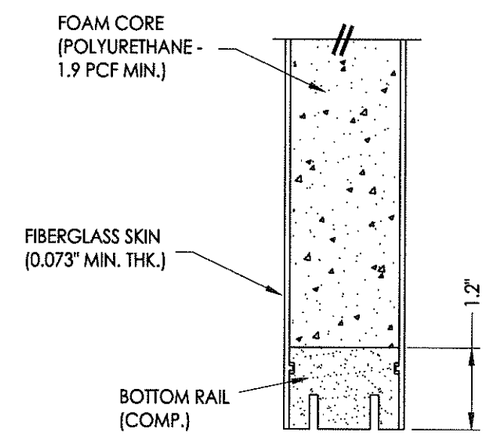

2/2 **VERTICAL CROSS SECTION**

STATE OF TEXAS
LYNDON F. SCHMIDT
104123
LICENSED
PROFESSIONAL ENGINEER
7-10-14

Documents Prepared By: Lyndon F. Schmidt, P.E.
TEXAS P.E. #104123
RW BUILDING CONSULTANTS, INC.
P.O. Box 230 Valrico FL. 33595
Phone No.: 813.659.9197
TEXAS BOARD OF PROFESSIONAL ENGINEERS
CERTIFICATE OF REGISTRATION # F-11852

PRODUCT: FIBERGLASS SIDELITE
PART OR ASSEMBLY: SIDELITE PANEL DETAILS

NO.	DATE	BY

REVISIONS

DATE: 9/16/13
SCALE: N.T.S.
DWG. BY: JK
CHK. BY: LFS
DRAWING NO.: TX-4382
SHEET 2 OF 6

© 2013 R.W. BUILDING CONSULTANTS INC.

R:\A - Projects\Project Folders\Proj 1701 - 1800\PF 1718\D. RWBC Drawings\ODL Plastpro\TX-4382.dwg, 2.3

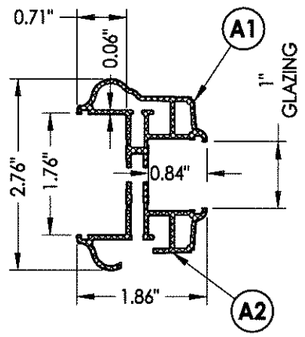

ODL LITE FRAME CROSS SECTION
1" GLAZING

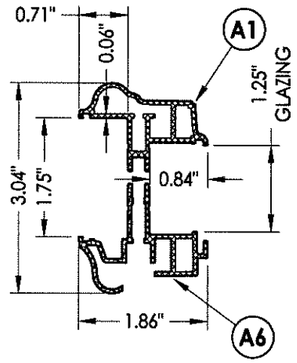

ODL LITE FRAME CROSS SECTION
1.25" GLAZING

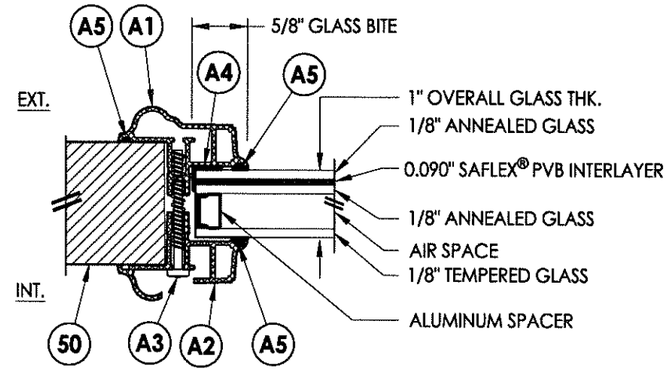

G1 GLAZING DETAIL

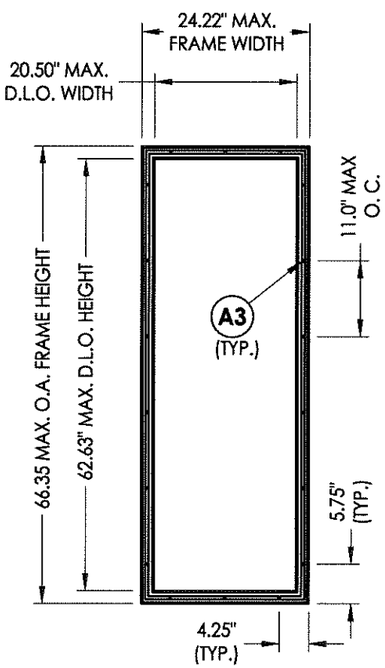

ODL LITE FRAME

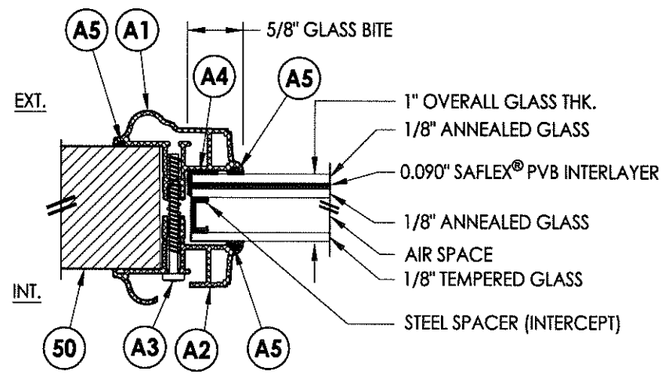

G2 GLAZING DETAIL

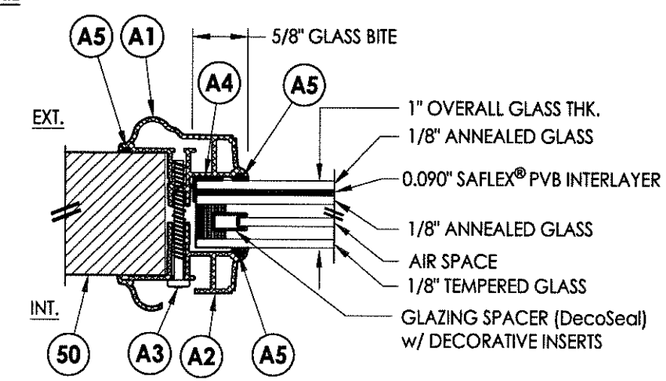

G3 GLAZING DETAIL

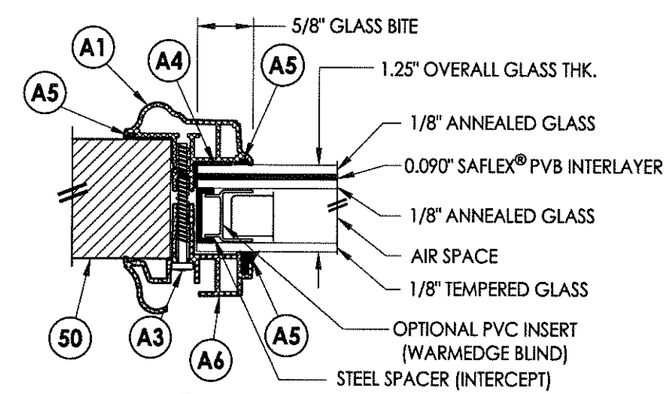

G4 GLAZING DETAIL

MAX. DESIGN PRESSURE FOR G4 GLAZING
INSWING = +40/-50 PSF

BILL OF MATERIALS (LITE FRAME & GLAZING DETAILS)

ITEM #	DESCRIPTION	MATERIAL
A1	EXTERIOR FRAME	ALUM.
A2	INTERIOR FRAME (1" GLAZING)	ALUM.
A3	#7-19 X 1-3/4" PPH SELF-DRILLING SMS	STEEL
A4	DOW 995 STRUCTURAL ADHESIVE	SILICONE
A5	NON STRUCTURAL BACKBEDDING SEALANT (READISEAL)	-
A6	INTERIOR FRAME (1" GLAZING)	ALUM.

STATE OF TEXAS
LYNDON F. SCHMIDT
104123
LICENSED PROFESSIONAL ENGINEER

Documents Prepared By: Lyndon F. Schmidt, P.E.
TEXAS P.E. #104123
RW BUILDING CONSULTANTS, INC.
P.O. Box 230 Valrico FL 33595
Phone No.: 813.659.9197
TEXAS BOARD OF PROFESSIONAL ENGINEERS
CERTIFICATE OF REGISTRATION # F-11852

PRODUCT: FIBERGLASS SIDELITE

PART OR ASSEMBLY: LITE FRAME & GLAZING DETAILS

NO.	DATE	REVISIONS	BY

DATE: 9/16/13
SCALE: N.T.S.
DWG. BY: JK
CHK. BY: LFS
DRAWING NO.: TX-4382
SHEET 3 OF 6

© 2013 R.W. BUILDING CONSULTANTS INC.

R:\A - Projects\Project Folders\Proj 1701 - 1800\PF 1718\D. RWBC Drawings\ODL Plastpro\TX-4382.dwg, 3.3

NOTE:
1. Sidelite panel screws located 6" from each end plus 4 more equally spaced (6 screws total).

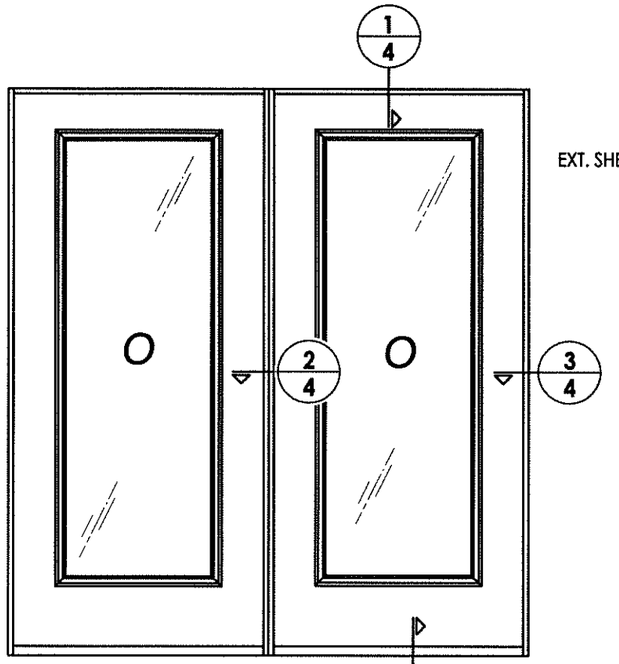

ELEVATION
OO

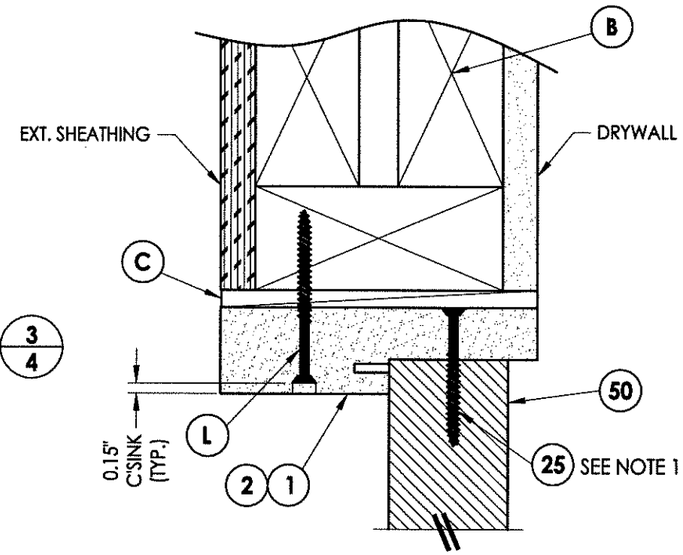

1/4 VERTICAL CROSS SECTION

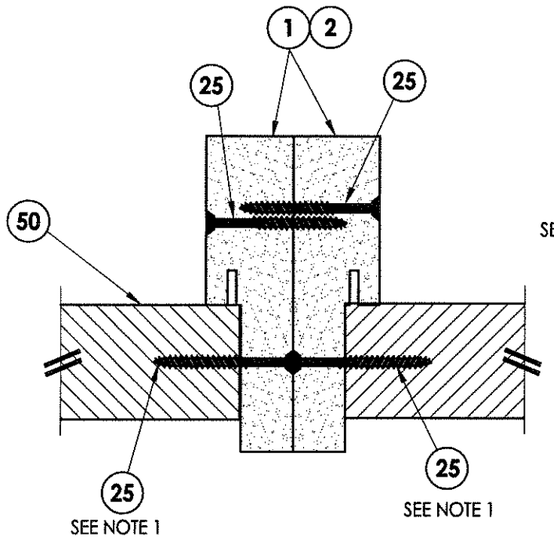

2/4 HORIZONTAL CROSS SECTION

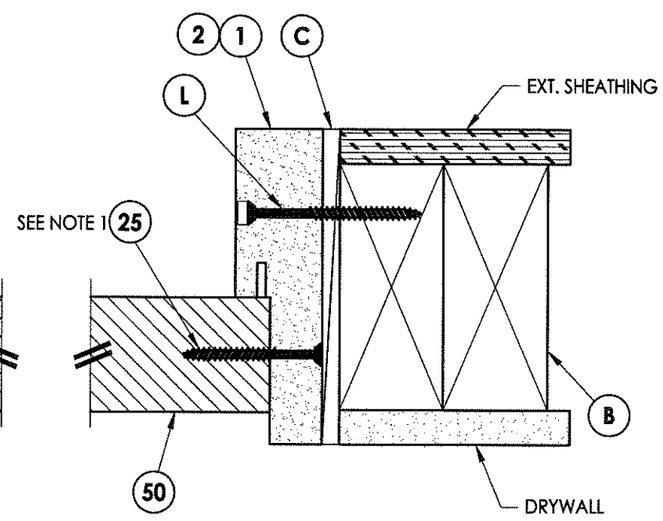

3/4 HORIZONTAL CROSS SECTION

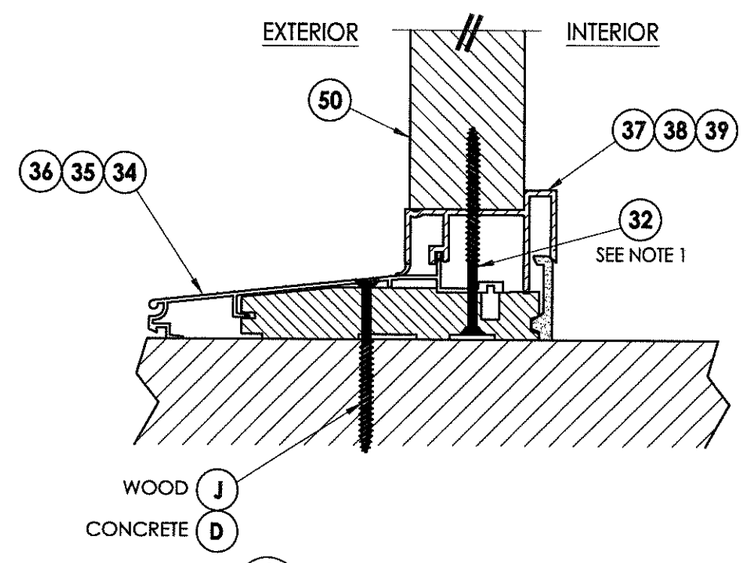

4/4 VERTICAL CROSS SECTION
Inswing shown

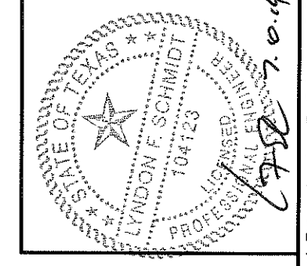

Documents Prepared By: Lyndon F. Schmidt, P.E.
TEXAS P.E. #104123
RW BUILDING CONSULTANTS, INC.
P.O. Box 230 Valrico FL 33595
Phone No.: 813.659.9197
TEXAS BOARD OF PROFESSIONAL ENGINEERS
CERTIFICATE OF REGISTRATION # F-11852

PRODUCT: FIBERGLASS SIDELITE

PART OR ASSEMBLY: ELEVATIONS & HARDWARE TABLE

REVISIONS

NO.	DATE	BY

DATE: 9/16/13
SCALE: N.T.S.
DWG. BY: JK
CHK. BY: LFS
DRAWING NO.: TX-4382
SHEET 4 OF 6

© 2013 R.W. BUILDING CONSULTANTS INC.

R:\A - Projects\Project Folders\Proj 1701 - 1800\PF 1718\D. RWBC Drawings\ODL Plastpro\TX-4382.dwg, 4.3

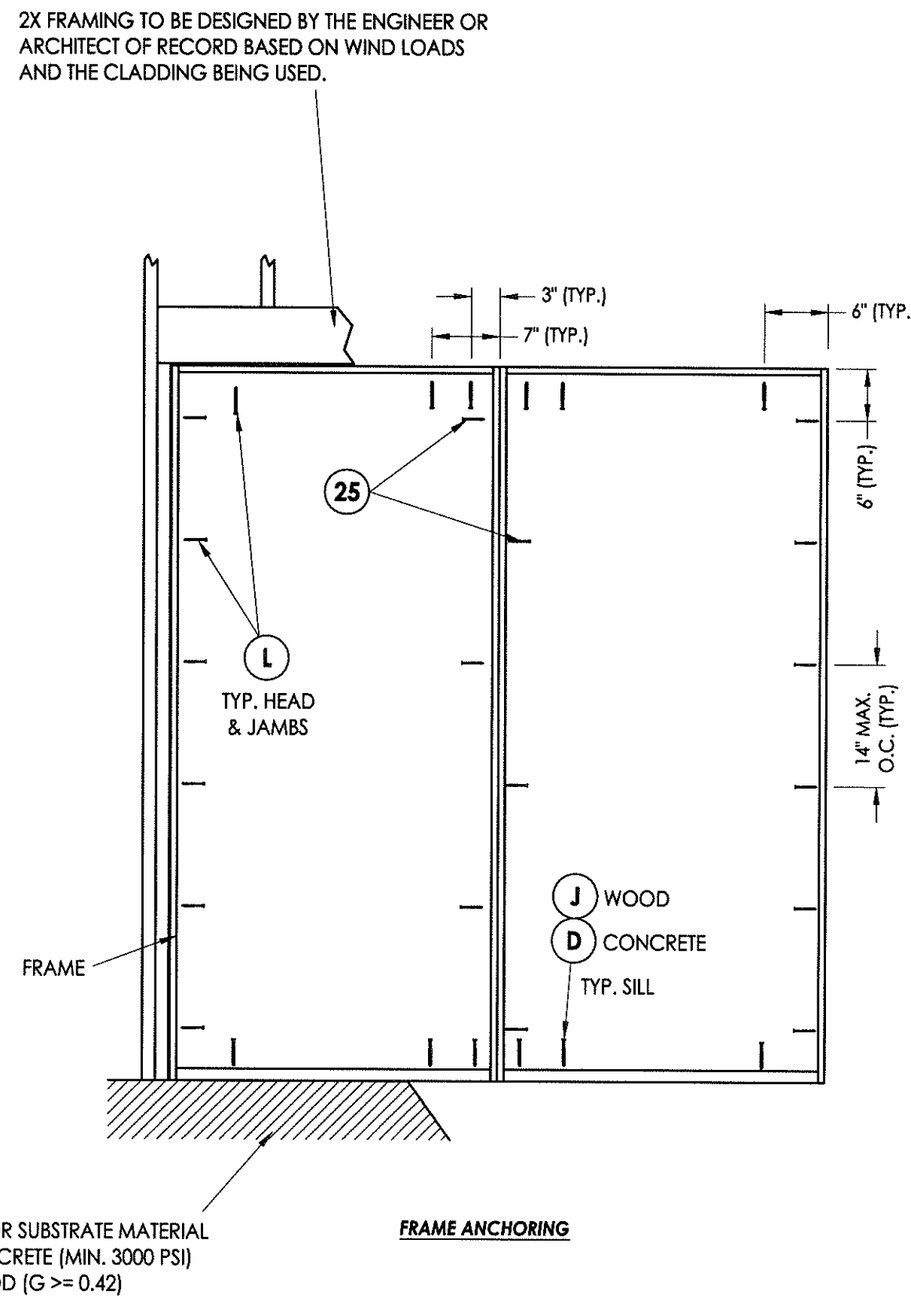

FRAME ANCHORING

CONCRETE ANCHOR NOTES:

1. *Concrete anchor locations at the corners may be adjusted to maintain the min. edge distance to mortar joints.*
2. *Concrete anchor locations noted as "MAX. ON CENTER" must be adjusted to maintain the min. edge distance to mortar joints, additional concrete anchors may be required to ensure the "MAX. ON CENTER" dimension are not exceeded.*
3. *Concrete anchor table:*

ANCHOR TYPE	ANCHOR SIZE	MIN. EMBEDMENT	MIN. CLEARANCE TO MASONRY EDGE	MIN. CLEARANCE TO ADJACENT ANCHOR
ITW TAPCON®	1/4"	1-3/4"	1-1/2"	4"
ELCO ULTRACON®	1/4"	1-3/4"	1"	3"

STATE OF TEXAS
LYNDON F. SCHMIDT
104123
LICENSED PROFESSIONAL ENGINEER

7.10.14

Documents Prepared By: Lyndon F. Schmidt, P.E.
TEXAS P.E. #104123
RW BUILDING CONSULTANTS, INC.
P.O. Box 230 Valrico FL. 33595
Phone No.: 813.659.9197
TEXAS BOARD OF PROFESSIONAL ENGINEERS
CERTIFICATE OF REGISTRATION # F-11852

PRODUCT: *FIBERGLASS SIDELITE*

PART OR ASSEMBLY: *FRAME ANCHORING*

REVISIONS

NO.	DATE	BY

DATE: 9/16/13
SCALE: N.T.S.
DWG. BY: JK
CHK. BY: LFS
DRAWING NO.: TX-4382
SHEET 5 OF 6

© 2013 R.W. BUILDING CONSULTANTS INC.

R:\A - Projects\Project Folders\Proj 1701 - 1800\PF 1718\D. RWBC Drawings\ODL Plastpro\TX-4382.dwg, 5.3

BILL OF MATERIALS

ITEM #	DESCRIPTION	MATERIAL
B	2X FRAMING (G >= 0.42)	WOOD
C	1/4" MAX. SHIM SPACE	-
D	1/4" PFH ITW CONCRETE SCREW (1-3/4" MIN. EMB.)	STEEL
J	#10 X 3" PFH WOOD SCREW (1-1/2" MIN. EMB.)	STEEL
L	#10 X 2-1/2" PFH WOOD SCREW (1.15" MIN. EMB.)	STEEL
1	HEAD & JAMB	COMP
2	HEAD & JAMB	WOOD
24	#10 X 1-1/2" PFH WOOD SCREW	STEEL
25	#10 X 2" PFH WOOD SCREW	STEEL
32	#8 X 3" PFH WS	STEEL
34	INSWING THRESHOLD	ALUM/COMP
35	INSWING THRESHOLD	ALUM/COMP
36	INSWING THRESHOLD	ALUM/COMP
37	INSWING SIDELITE SEAT	PVC
38	INSWING SIDELITE SEAT	PVC
39	INSWING SIDELITE SEAT	PVC
50	SIDELITE PANEL - SEE SIDELITE PANEL DETAIL SHEET FOR DETAILS	-

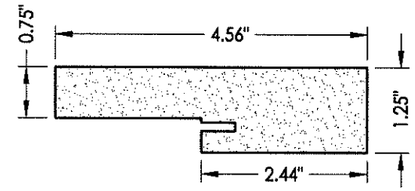

1 **HEAD & JAMB**
Composite

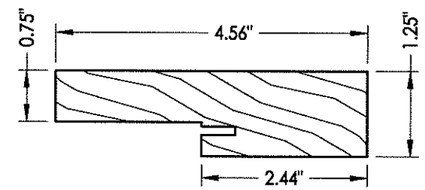

2 **HEAD & JAMB**
Finger joint pine

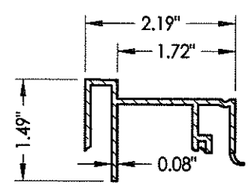

37 **INSWING SIDELITE SEAT**
Therma-Tru

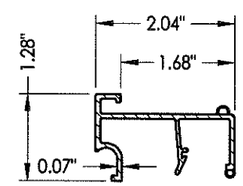

38 **INSWING SIDELITE SEAT**
Endura 60 SERIES

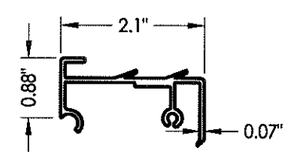

39 **INSWING SIDELITE SEAT**
Columbia

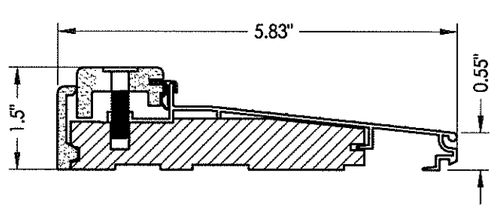

34 **INSWING THRESHOLD**
Therma-Tru

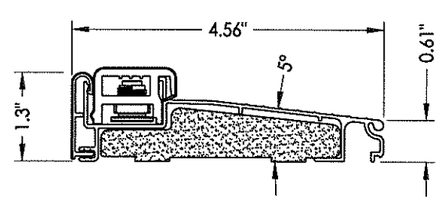

35 **INSWING THRESHOLD**
Endura ZAIL 4565
with Composite Substrate

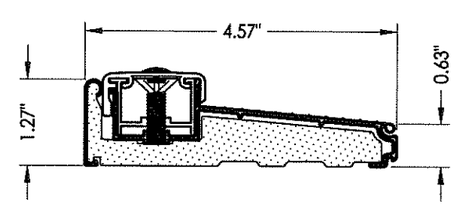

36 **INSWING THRESHOLD**
Columbia 900 Series

STATE OF TEXAS
LYNDON F. SCHMIDT
104123
LICENSED
PROFESSIONAL ENGINEER

7.10.14

Documents Prepared By: Lyndon F. Schmidt, P.E.
TEXAS P.E. #104123

RW BUILDING CONSULTANTS, INC.
P.O. Box 230 Valrico FL 33595
Phone No.: 813.659.9197

TEXAS BOARD OF PROFESSIONAL ENGINEERS
CERTIFICATE OF REGISTRATION # F-11852

PRODUCT: FIBERGLASS SIDELITE

PART OR ASSEMBLY: BILL OF MATERIALS & COMPONENTS

NO.	DATE	BY

REVISIONS

DATE: 9/16/13
SCALE: N.T.S.
DWG. BY: JK
CHK. BY: LFS
DRAWING NO.: TX-4382
SHEET 6 OF 6

© 2013 R.W. BUILDING CONSULTANTS INC.

R:\A - Projects\Project Folders\Proj 1701 - 1800\PF 1718\D. RWBC Drawings\ODL Plastpro\TX-4382.dwg, 6.3