REVISIONS			
REV	DESCRIPTION	DATE	APPROVED
A	REMOVED RATING CHART	12/17/12	R.L.

NOTES:

1. THE PRODUCT SHOWN HEREIN IS DESIGNED AND MANUFACTURED TO COMPLY WITH REQUIREMENTS OF THE INTERNATIONAL BUILDING CODE THE RESIDENTIAL BUILDING CODE WITH STATE OF TEXAS MODIFICATIONS.
2. WOOD FRAMING AND MASONRY OPENING TO BE DESIGNED AND ANCHORED TO PROPERLY TRANSFER ALL LOADS TO STRUCTURE. FRAMING AND MASONRY OPENING IS THE RESPONSIBILITY OF THE ARCHITECT OR ENGINEER OF RECORD.
3. 1X BUCK OVER MASONRY/CONCRETE IS OPTIONAL. WHERE 1X BUCK IS NOT USED DISSIMILAR MATERIALS MUST BE SEPARATED WITH APPROVED COATING OR MEMBRANE. SELECTION OF COATING OR MEMBRANE IS THE RESPONSIBILITY OF THE ARCHITECT OR ENGINEER OF RECORD.
4. ALLOWABLE STRESS INCREASE OF 1/3 WAS NOT USED IN THE DESIGN OF THE PRODUCT SHOWN HEREIN. WIND LOAD DURATION FACTOR Cd=1.6 WAS USED FOR WOOD ANCHOR CALCULATIONS.
5. FRAME MATERIAL: EXTRUDED 6063–T6 ALUMINUM.
6. UNITS MUST BE GLAZED PER ASTM E1300–04, SEE SHEET 4 FOR GLASS OPTIONS.
7. APPROVED IMPACT PROTECTIVE SYSTEM <u>IS NOT REQUIRED</u> FOR THIS PRODUCT IN WIND BORNE DEBRIS REGIONS.
8. SHIM AS REQUIRED AT EACH INSTALLATION ANCHOR WITH LOAD BEARING SHIM. SHIM WHERE SPACE OF 1/16" OR GREATER OCCURS. MAXIMUM ALLOWABLE SHIM STACK TO BE 1/4".
9. FOR ANCHORING INTO WOOD FRAMING OR 2X BUCK USE #12 WOOD SCREWS WITH SUFFICIENT LENGTH TO ACHIEVE A 1 5/8" MINIMUM EMBEDMENT INTO SUBSTRATE. LOCATE ANCHORS AS SHOWN IN ELEVATIONS AND INSTALLATION DETAILS.
10. FOR ANCHORING INTO MASONRY/CONCRETE USE 1/4" TAPCONS WITH SUFFICIENT LENGTH TO ACHIEVE A 1 1/4" MINIMUM EMBEDMENT INTO SUBSTRATE WITH 2 1/2'' MINIMUM EDGE DISTANCE. LOCATE ANCHORS AS SHOWN IN ELEVATIONS AND INSTALLATION DETAILS.
11. ALL FASTENERS TO BE CORROSION RESISTANT.
12. INSTALLATION ANCHORS SHALL BE INSTALLED IN ACCORDANCE WITH ANCHOR MANUFACTURER'S INSTALLATION INSTRUCTIONS AND ANCHORS SHALL NOT BE USED IN SUBSTRATES WITH STRENGTHS LESS THAN THE MINIMUM STRENGTH SPECIFIED BELOW:
    A. WOOD – MINIMUM SPECIFIC GRAVITY OF G=0.42
    B. CONCRETE – MINIMUM COMPRESSIVE STRENGTH OF 3,192 PSI.
    C. MASONRY – STRENGTH CONFORMANCE TO ASTM C–90, GRADE N, TYPE 1 (OR GREATER).
13. APPROVED CONFIGURATIONS: X, XX, OX, XO, XXX, OOX, XOO, XOX, OXO, XXO, OXX, XXXX, OXXX, XXXO, XXOX, XOXX.

TABLE OF CONTENTS

SHEET NO.	DESCRIPTION
1	GENERAL NOTES
2	ELEVATION
3	ANCHORING LAYOUT AND NOTES
4	BILL OF MATYERIALS AND GLAZING DETAILS
5 – 9	CROSS SECTIONS
10 – 12	INSTALLATION DETAILS
13 – 14	COMPONENTS

SIGNED: 12/17/2012

WinDoor INCORPORATED
7500 AMSTERDAM DRIVE
ORLANDO, FL 32832
Phone: 407.481.8400
Fax: 407.481.0505
www.windoorinc.com

7000 HP SERIES IMPACT REINFORCED & NON–REINFORCED GENERAL NOTES

DRAWN:	DWG NO.	REV
V.L.	08–01660	A

SCALE	DATE	SHEET
NTS	06/29/2012	1 OF 14

STATE OF TEXAS
LUIS R. LOMAS
101889
LICENSED
PROFESSIONAL ENGINEER

Luis R. Lomas P.E.
TX No.: 101889

REVISIONS			
REV	DESCRIPTION	DATE	APPROVED
A	REMOVED RATING CHART	12/17/12	R.L.

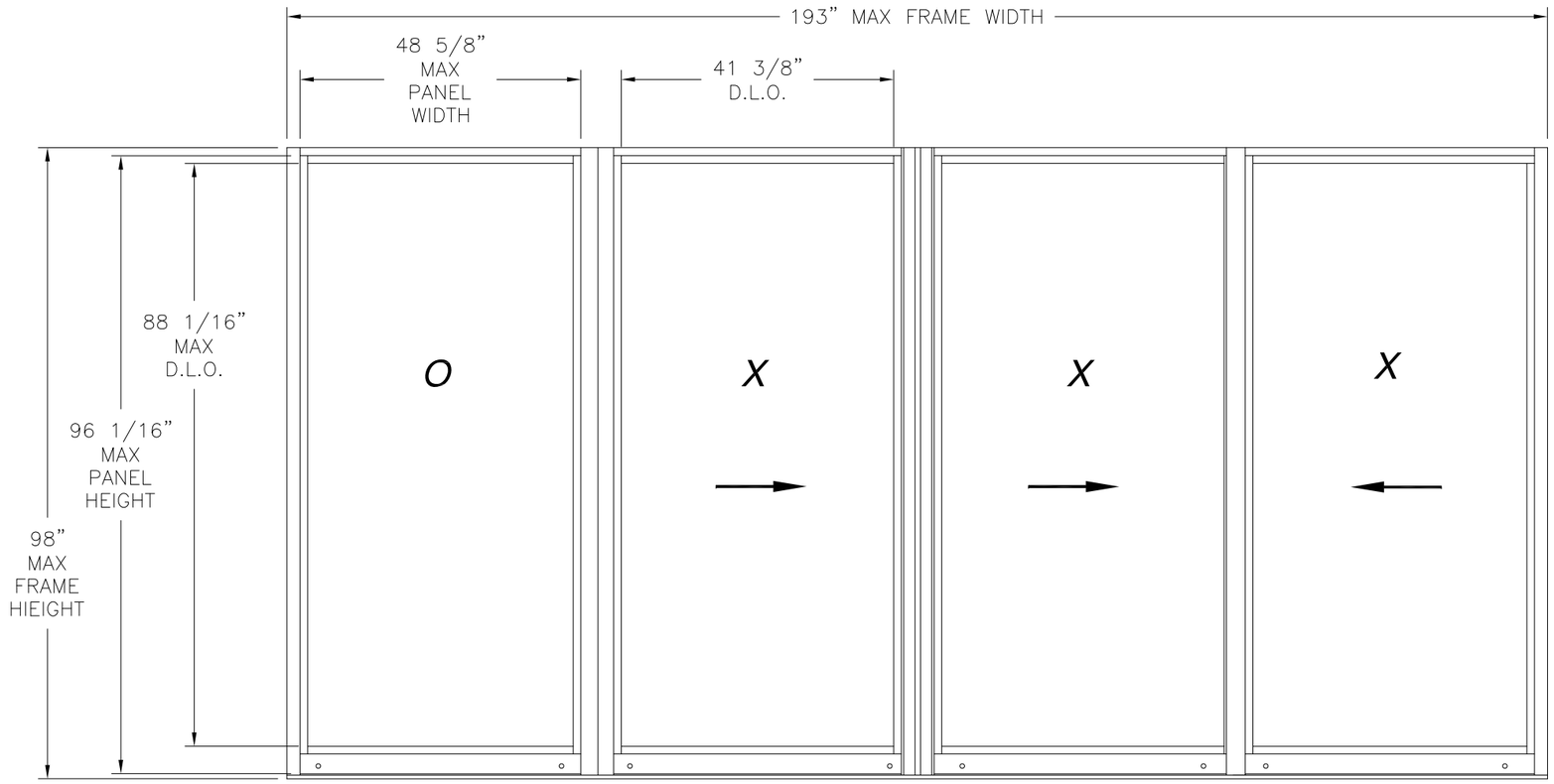

7000 HP SERIES ALUMINUM REINFORCED AND NON-REINFORCED SLIDING GLASS DOOR

EXTERIOR VIEW

REINFORCED UNITS

DESIGN PRESSURE RATING	IMPACT RATING
+80.0/-90.0 PSF	LARGE AND SMALL MISSILE IMPACT

MISSILE LEVEL D, WIND ZONE 4
WITH 3 1/8" AND 4 1/4" SILL RISERS

NON-REINFORCED UNITS

DESIGN PRESSURE RATING	IMPACT RATING
+60.0/-70.0 PSF	LARGE AND SMALL MISSILE IMPACT

MISSILE LEVEL D, WIND ZONE 4
WITH 2 1/2" AND 3 1/8" SILL RISERS

PANEL CONSTRUCTION:
PANELS ARE CONSTRUCTED FROM EXTRUDED 6063–T6 ALUMINUM. VERTICAL STILES ARE NOTCHED TO RECEIVE HORIZONTAL RAILS. EACH RAIL IS SECURED TO STILES WITH (3) #10 x 1 1/4" SQ. DRIVE SCREW AT EACH END. ALL PANELS HAVE AN INTERIOR FIXED GLAZING STOP AND AN EXTERIOR APPLIED GLAZING STOP.

FRAME CONSTRUCTION:
EACH FRAME CORNER IS NOTCHED AND BUTTED. HEAD AND SILL ARE SECURED TO JAMBS WITH #7 x 1" TYPE F SCREW. (2) AT EACH CORNER ON 2 TRACK FRAME, (3) AT EACH CORNER ON 3 TRACK FRAME AND (4) AT EACH CORNER ON 4 TRACK FRAME.

SIGNED: 12/17/2012

WinDoor INCORPORATED
7500 AMSTERDAM DRIVE
ORLANDO, FL 32832
Phone: 407.481.8400
Fax: 407.481.0505
www.windoorinc.com

7000 HP SERIES IMPACT REINFORCED & NON–REINFORCED ELEVATION

DRAWN:	DWG NO.	REV
V.L.	08–01660	A

SCALE	DATE	SHEET
NTS	06/29/2012	2 OF 14

Luis R. Lomas P.E.
TX No.: 101889

REVISIONS			
REV	DESCRIPTION	DATE	APPROVED
A	REMOVED RATING CHART	12/17/12	R.L.

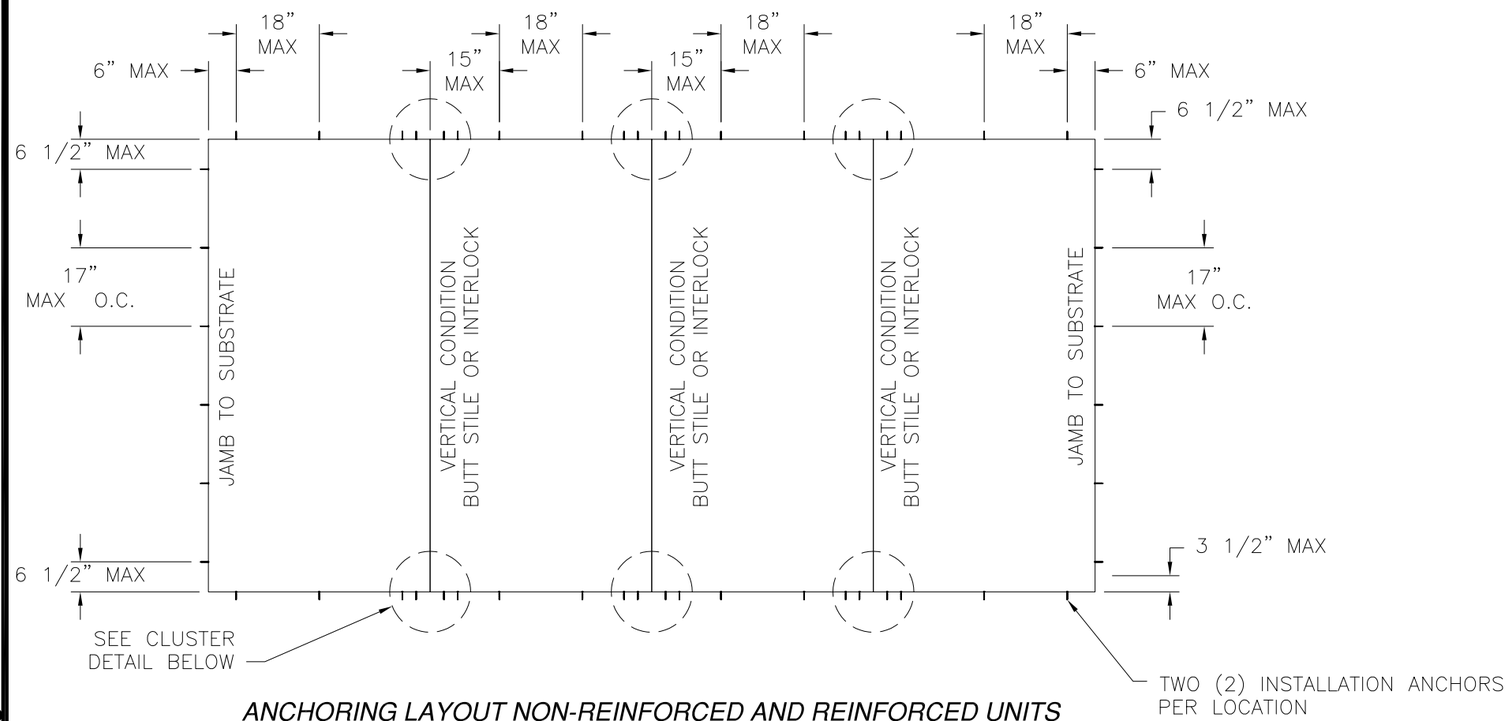

ANCHORING LAYOUT NON-REINFORCED AND REINFORCED UNITS

4 PANEL UNIT SHOWN, APPLICABLE TO ALL CONFIGURATIONS USING SAME ANCHOR CLUSTER AND PATTERN

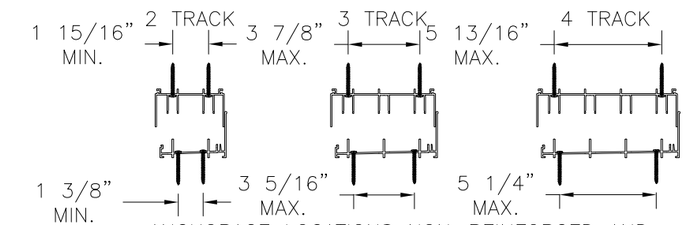

ANCHORAGE LOCATIONS NON-REINFORCED AND REINFORCED AT HEAD AND SILL. (FOR FURTHER DETAILS SEE SHEETS 9 – 11)

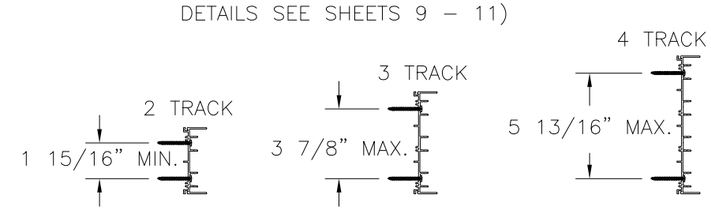

ANCHORAGE LOCATIONS NON-REINFORCED AND REINFORCED AT JAMBS. (FOR FURTHER DETAILS SEE SHEETS 9 – 11)

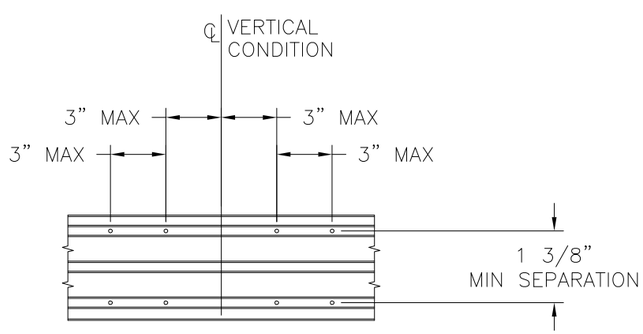

ANCHOR CLUSTER DETAIL

2 TRACK AND 3 TRACK REINFORCED AND NON-REINFORCED AT HEAD & SILL (ANCHORAGE IN EXTERIOR TRACKS)

SIGNED: 12/17/2012

WinDoor INCORPORATED
7500 AMSTERDAM DRIVE
ORLANDO, FL 32832
Phone: 407.481.8400
Fax: 407.481.0505
www.windoorinc.com

7000 HP SERIES IMPACT REINFORCED & NON-REINFORCED ANCHORING LAYOUT & NOTES

DRAWN:	DWG NO.	REV
V.L.	08-01660	A
SCALE NTS	DATE 06/29/2012	SHEET 3 OF 14

Luis R. Lomas P.E.
TX No.: 101889

BILL OF MATERIAL			
NO.	PART NO.	DESCRIPTION	
1	FS-04522	2T FRAME HEAD	KEYMARK 6063-T6
2	FS-04531	2T FRAME JAMB	KEYMARK 6063-T6
3	FS-04525	2T FRAME SILL PAN WITH 2 1/2" RISER	KEYMARK 6063-T6
4	FS-04526	2T FRAME SILL PAN WITH 3 1/8" RISER	KEYMARK 6063-T6
5	S-46254	2T FRAME SILL PAN WITH 4 1/4" RISER	KEYMARK 6063-T6
6	FS-04529	2T FRAME SILL PAN INSERT	KEYMARK 6063-T6
7	FS-04313	FRAME HEAD TRACK COVER	KEYMARK 6063-T6
8	FS-04501	RECESSED JAMB TRACK COVER	KEYMARK 6063-T6
9	FS-04509	FLUSH JAMB COVER	KEYMARK 6063-T6
10	FS-04535	PANEL STOP SILL COVER	KEYMARK 6063-T6
11	FS-04332	PANEL STOP HEAD COVER	KEYMARK 6063-T6
12	FS-04631	TOP AND BOTTOM RAIL	KEYMARK 6063-T6
13	FH-04327	PANEL STILE	KEYMARK 6063-T6
14	FH-04516	PANEL INTERLOCK LEFT HAND STILE	KEYMARK 6063-T6
15	FH-04515	PANEL INTERLOCK RIGHT HAND STILE	KEYMARK 6063-T6
16	FH-04789	MALE BUTT STILE	KEYMARK 6063-T6
17	FH-04790	LOCKING BUTT STILE	KEYMARK 6063-T6
18	FH-04505	INTERIOR FIXED BUTT STILE OFFSET	KEYMARK 6063-T6
19	FH-04312	INTERLOCK COVER	KEYMARK 6063-T6
20	FH-04503	INTERLOCK REINFORCING BAR	
21	FS-04533	9/16" GLASS STOP	KEYMARK 6063-T6
22	FS-04524	3/4" GLASS STOP	KEYMARK 6063-T6
23	FS-05391	Z-CLIP	KEYMARK 6063-T6
24	5000 SS PDR	TANDEM ROLLER SS	
25	2186MI-INT	TRADITIONAL INTERNAL TYPE A HANDLE SET	
26	7014 SS DLPA	DUAL POINT MORTISE LOCK & KEEPER SET	
27	OWI1023BOR750375	RUBBER PANEL BUMPER	
28	V-INT TP 876	INTERLOCK BUMPER	
29	PRE-PACK B	TANDEM ROLLER ADJUSTMENT HOLE COVER	
30	DRG#05-100 V2	PANEL TOP GUIDE	
31	FS-05365	BUTT SCREEN ADAPTER COVER	KEYMARK 6063-T6
32		SCREEN CLOTH	
33	#8 X 1/4"	SILL ASSY. SCREW PH TYPE B 18-8 SS	
34	#8 X 3/4"	ROLLER INSTALL. SCREWS PH TYPE F SS 410	
35	#10 X 1 1/4"	PANEL ASSEMBLY SCREW SQ. DRIVE PPOINT SS 18-8	
36	#8 X 5/8"	FRAME ASSEMBLY SCREW PH TYPE A 410-SS	
37	#10 X 3/4"	Z CLIP & REINFORCEMENT INSTALLATION SCREW PH TEK SCREW	
38		SCREEN SPLINE	
39	#10 X 1/2"	LOCK INSTALLATION SCREW FH TYPE A SMS SS 18-8	
40		1 1/4" X 2 1/4" X 1" FIN PAD	
41		1" X 1" X 3/4" FIN PAD	
42	GS-VN-05A	TP 1060 GLAZING VINYL, 3/4" GLASS	
43	GS-VN-07A	TP 1048 GLAZING VINYL, 7/16" GLASS	
44	T5044AMK	0.187" X 0.500" X 1.375" ULTRA PLUG SINGLE FIN SPECIAL	
45	W332217K0000	0.187" X 0.220" FIN WEATHER STRIP	
46	W234017K0000	0.187" X 0.400" FIN WEATHER STRIP	
47	W333517K0000	0.187" X 0.350" FIN WEATHER STRIP	
48		GLASS SPACER	
49	SIKA 552	URETHANE SEALANT	
50	FS-04511	3T FRAME HEAD	KEYMARK 6063-T6
51	FS-04510	3T FRAME JAMB	KEYMARK 6063-T6
52	FS-04506	3T FRAME SILL PAN WITH 2 1/2" RISER	KEYMARK 6063-T6
53	FS-04507	3T FRAME SILL PAN WITH 3 1/8" RISER	KEYMARK 6063-T6
54	S-46255	3T FRAME SILL PAN WITH 4 1/4" RISER	KEYMARK 6063-T6
55	FS-04508	3T FRAME SILL PAN INSERT	KEYMARK 6063-T6
56	FS-05364	BUTT SCREEN ADAPTER	KEYMARK 6063-T6
57	FH-02300	STANDARD SCREEN TOP & BOTTOM RAIL	KEYMARK 6063-T6
58	FH-02395	STANDARD SCREEN STILE	KEYMARK 6063-T6
59	FS-02650	OXXO STANDARD SCREEN ASTRAGAL	KEYMARK 6063-T6
60	FS-04329	SCREEN WIPER	KEYMARK 6063-T6

REVISIONS			
REV	DESCRIPTION	DATE	APPROVED
A	REMOVED RATING CHART	12/17/12	R.L.

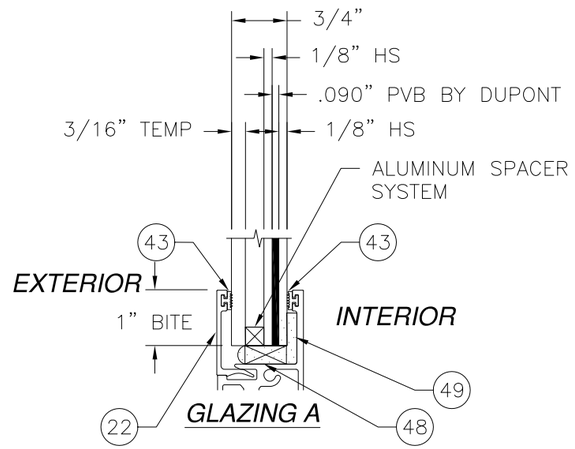

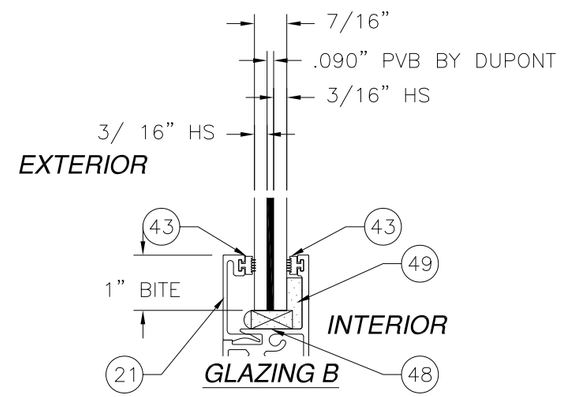

SIGNED: 12/17/2012

WinDoor INCORPORATED
7500 AMSTERDAM DRIVE
ORLANDO, FL 32832
Phone: 407.481.8400
Fax: 407.481.0505
www.windoorinc.com

7000 HP SERIES IMPACT REINFORCED
& NON-REINFORCED
B.O.M. AND GLAZING DETAILS

DRAWN:	DWG NO.	REV
V.L.	08-01660	A
SCALE NTS	DATE 06/29/2012	SHEET 4 OF 14

STATE OF TEXAS
LUIS R. LOMAS
101889
LICENSED
PROFESSIONAL ENGINEER

Luis R. Lomas P.E.
TX No.: 101889

REVISIONS			
REV	DESCRIPTION	DATE	APPROVED
A	REMOVED RATING CHART	12/17/12	R.L.

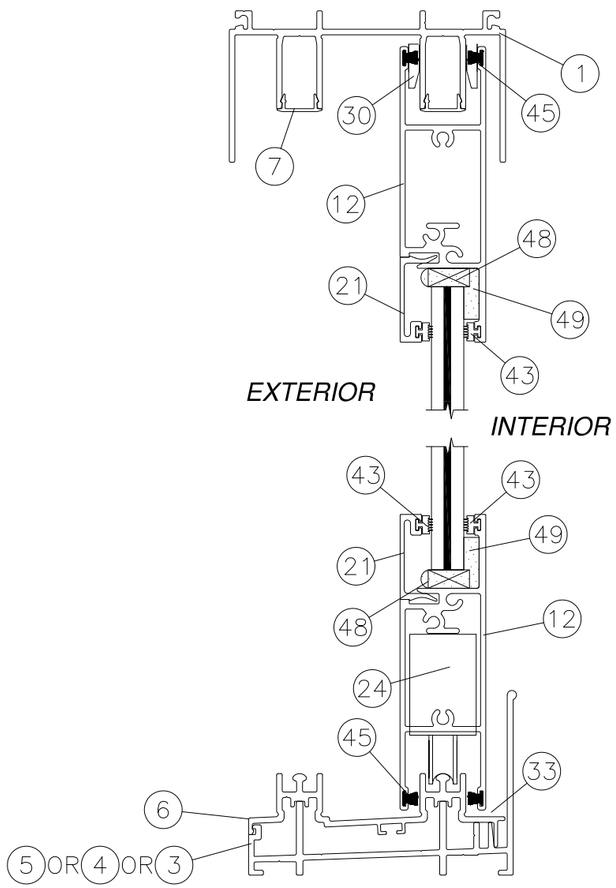

VERTICAL CROSS SECTION C

2 TRACK FRAME

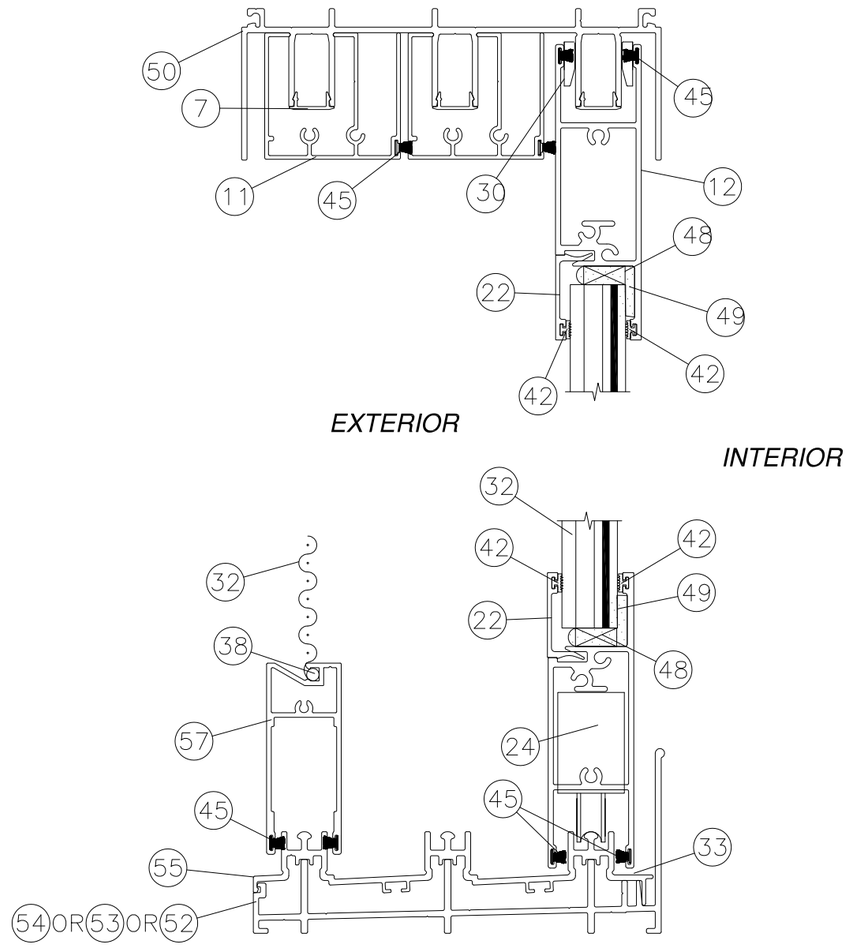

VERTICAL CROSS SECTION C

3 TRACK FRAME

UNITS MAY BE INSTALLED WITHOUT SCREEN

SIGNED: 12/17/2012

WinDoor INCORPORATED

7500 AMSTERDAM DRIVE
ORLANDO, FL 32832
Phone: 407.481.8400
Fax: 407.481.0505
www.windoorinc.com

7000 HP SERIES IMPACT REINFORCED
& NON-REINFORCED
VERTICAL CROSS SECTIONS

DRAWN:	DWG NO.	REV
V.L.	08-01660	A

SCALE	DATE	SHEET
NTS	06/29/2012	5 OF 14

STATE OF TEXAS
LUIS R. LOMAS
101889
LICENSED
PROFESSIONAL ENGINEER

Luis R. Lomas P.E.
TX No.: 101889

REVISIONS			
REV	DESCRIPTION	DATE	APPROVED
A	REMOVED RATING CHART	12/17/12	R.L.

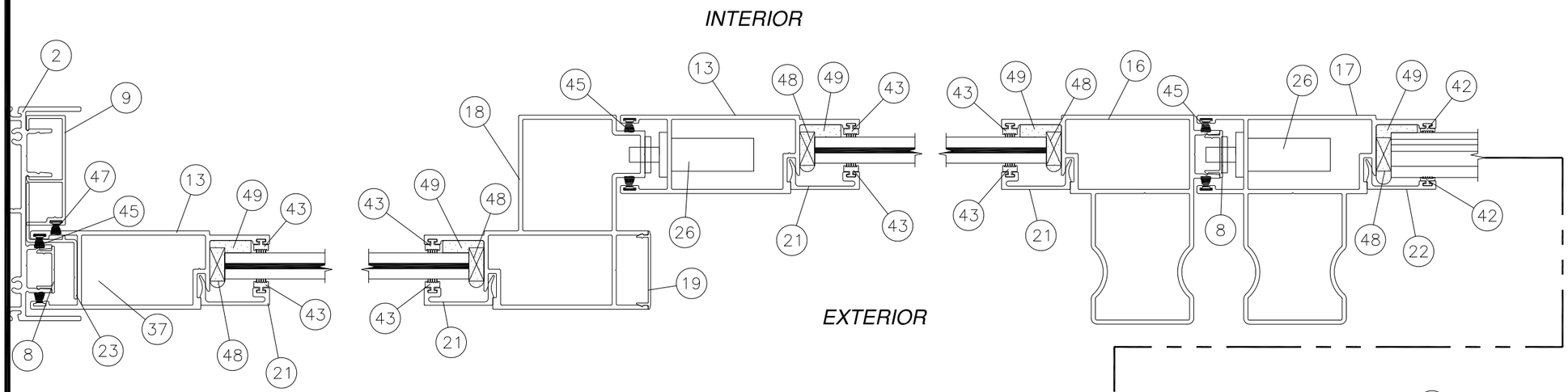

HORIZONTAL CROSS SECTION G

2 TRACK NON-REINFORCED

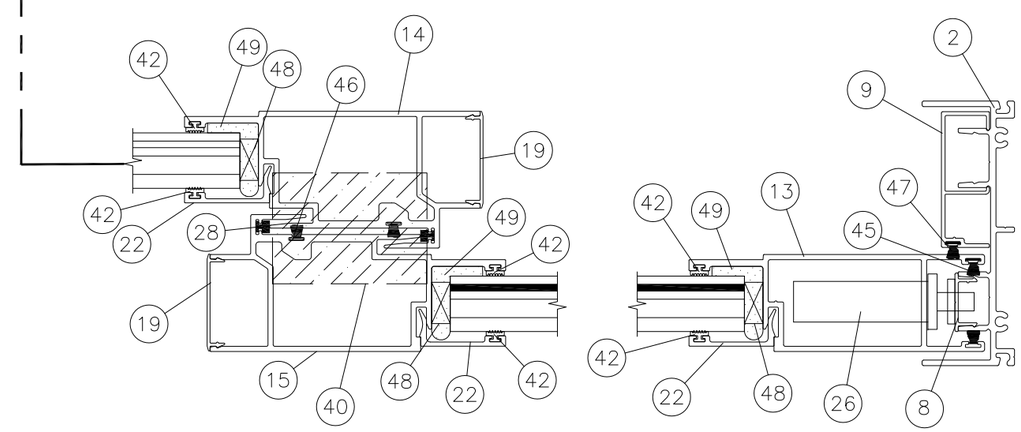

SIGNED: 12/17/2012

WinDoor INCORPORATED

7500 AMSTERDAM DRIVE
ORLANDO, FL 32832
Phone: 407.481.8400
Fax: 407.481.0505
www.windoorinc.com

7000 HP SERIES IMPACT REINFORCED
& NON-REINFORCED
HORIZONTAL CROSS SECTIONS NON-REINFORCED

DRAWN:	DWG NO.	REV
V.L.	08-01660	A

SCALE	DATE	SHEET
NTS	06/29/2012	6 OF 14

STATE OF TEXAS
LUIS R. LOMAS
101889
LICENSED
PROFESSIONAL ENGINEER

Luis R. Lomas P.E.
TX No.: 101889

REVISIONS			
REV	DESCRIPTION	DATE	APPROVED
A	REMOVED RATING CHART	12/17/12	R.L.

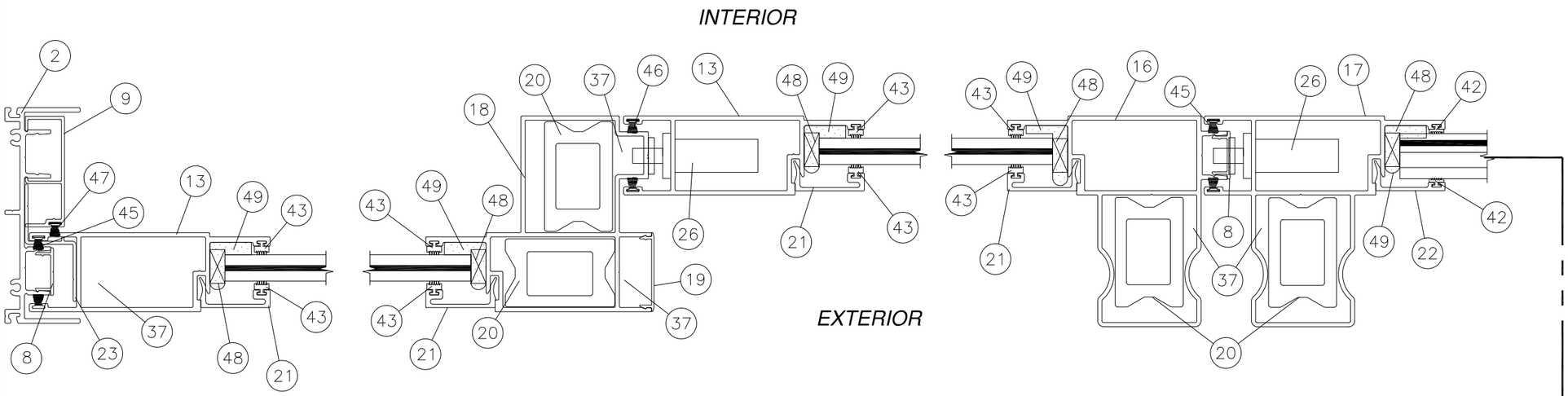

HORIZONTAL CROSS SECTION G

2 TRACK REINFORCED

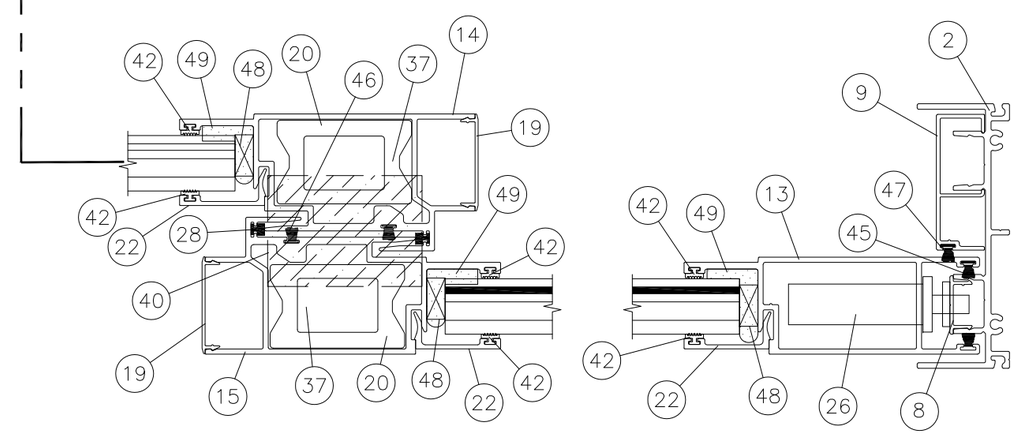

SIGNED: 12/17/2012

WinDoor INCORPORATED

7500 AMSTERDAM DRIVE
ORLANDO, FL 32832
Phone: 407.481.8400
Fax: 407.481.0505
www.windoorinc.com

7000 HP SERIES IMPACT REINFORCED
& NON-REINFORCED
HORIZONTAL CROSS SECTION REINFORCED

DRAWN:	DWG NO.	REV
V.L.	08-01660	A

SCALE	DATE	SHEET
NTS	06/29/2012	7 OF 14

STATE OF TEXAS
LUIS R. LOMAS
101889
LICENSED
PROFESSIONAL ENGINEER

Luis R. Lomas P.E.
TX No.: 101889

REVISIONS			
REV	DESCRIPTION	DATE	APPROVED
A	REMOVED RATING CHART	12/17/12	R.L.

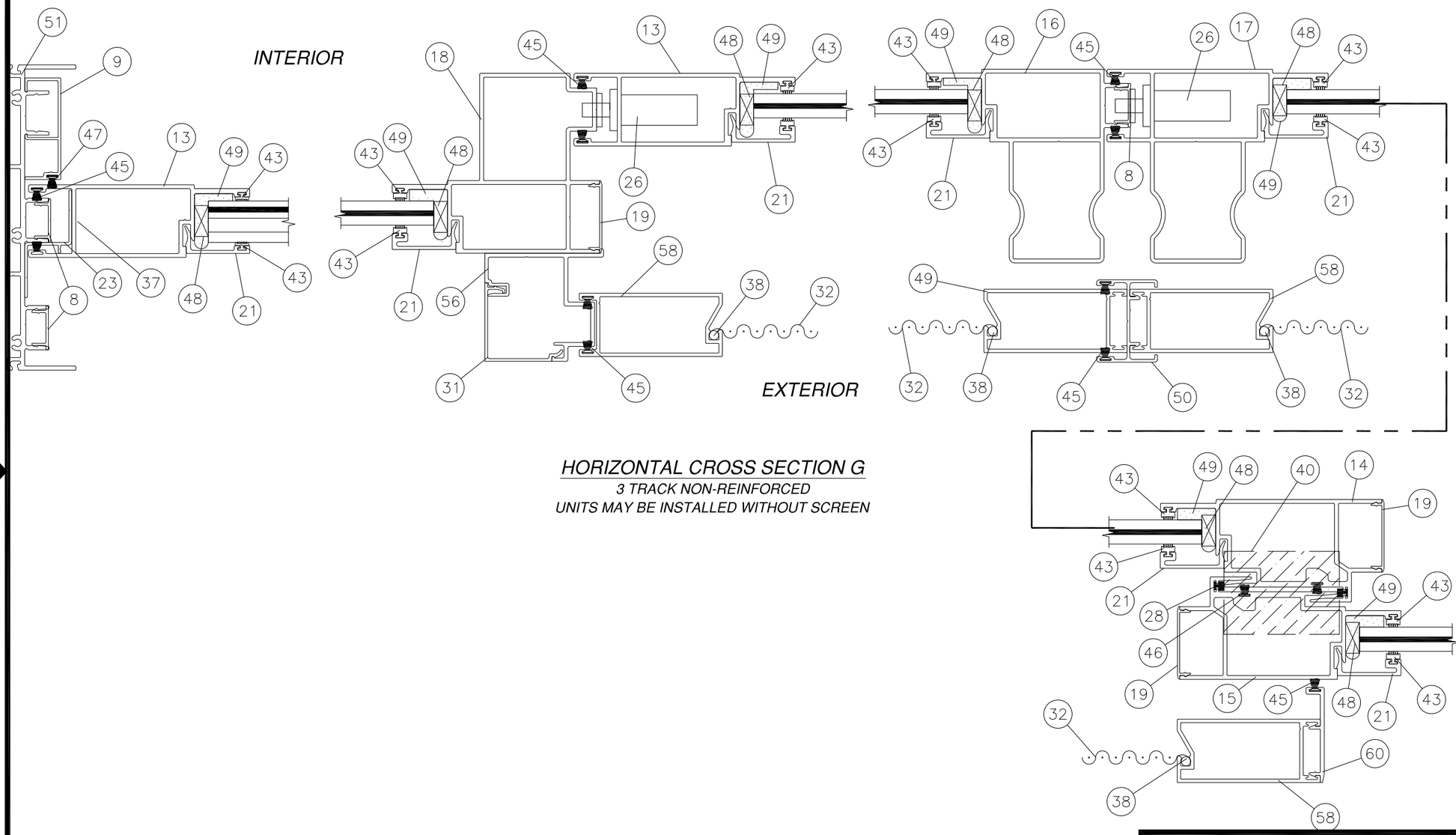

HORIZONTAL CROSS SECTION G

3 TRACK NON-REINFORCED

UNITS MAY BE INSTALLED WITHOUT SCREEN

SIGNED: 12/17/2012

WinDoor INCORPORATED

7500 AMSTERDAM DRIVE
ORLANDO, FL 32832
Phone: 407.481.8400
Fax: 407.481.0505
www.windoorinc.com

7000 HP SERIES IMPACT REINFORCED
& NON-REINFORCED
HORIZONTAL CROSS SECTION NON-REINFORCED

DRAWN:	DWG NO.	REV
V.L.	08-01660	A

SCALE	DATE	SHEET
NTS	06/29/2012	8 OF 14

STATE OF TEXAS
LUIS R. LOMAS
101889
LICENSED
PROFESSIONAL ENGINEER

Luis R. Lomas P.E.
TX No.: 101889

REVISIONS			
REV	DESCRIPTION	DATE	APPROVED
A	REMOVED RATING CHART	12/17/12	R.L.

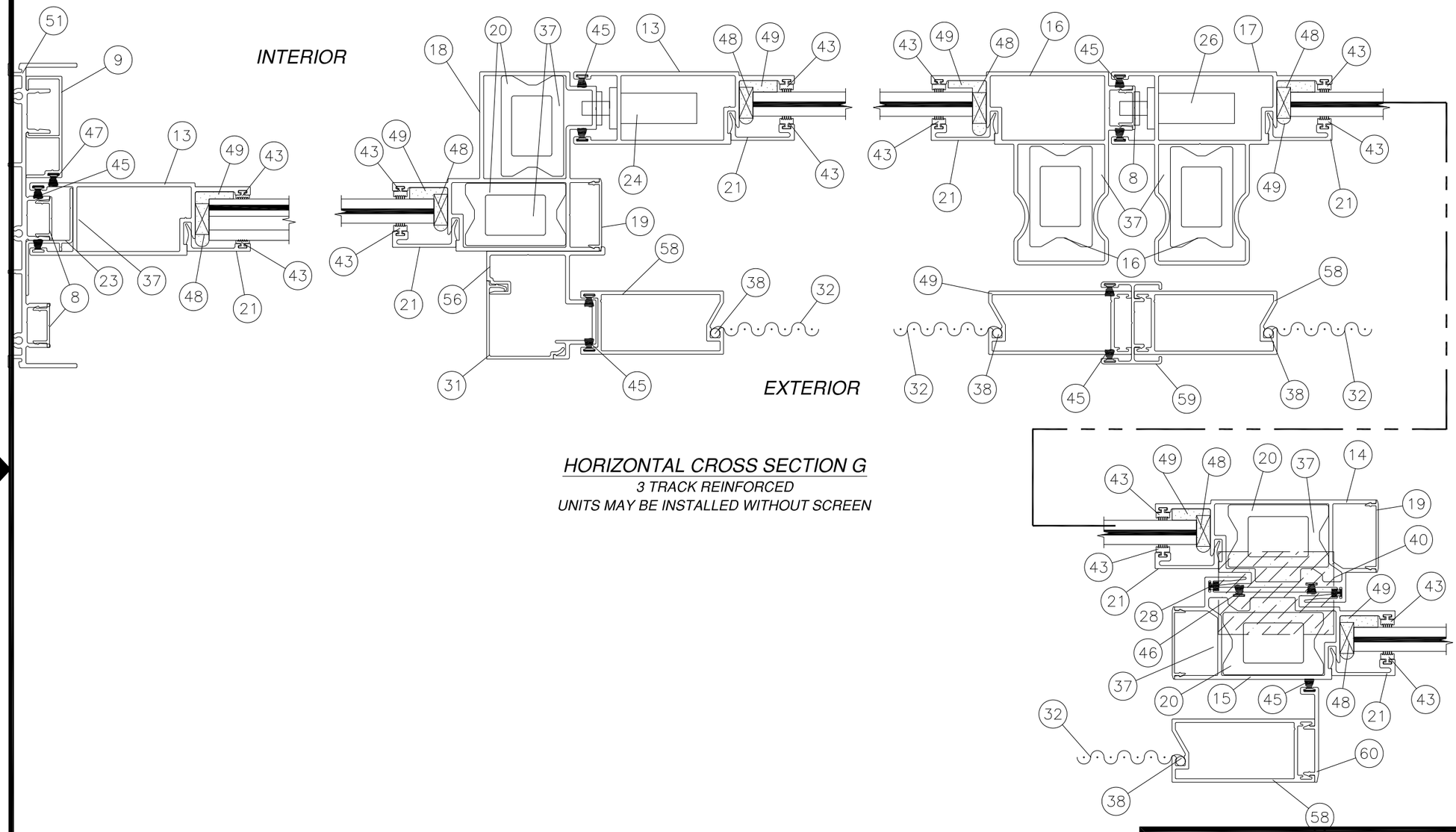

HORIZONTAL CROSS SECTION G

3 TRACK REINFORCED

UNITS MAY BE INSTALLED WITHOUT SCREEN

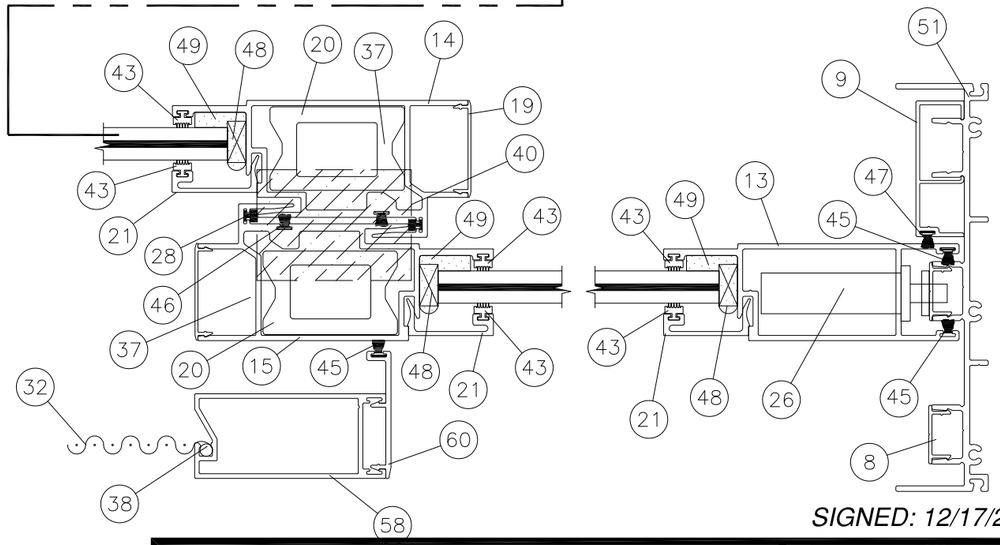

SIGNED: 12/17/2012

WinDoor INCORPORATED

7500 AMSTERDAM DRIVE
ORLANDO, FL 32832
Phone: 407.481.8400
Fax: 407.481.0505
www.windoorinc.com

7000 HP SERIES IMPACT REINFORCED
& NON-REINFORCED
HORIZONTAL CROSS SECTION REINFORCED

DRAWN:	DWG NO.	REV
V.L.	08-01660	A

SCALE	DATE	SHEET
NTS	06/29/2012	9 OF 14

Luis R. Lomas P.E.
TX No.: 101889

REVISIONS			
REV	DESCRIPTION	DATE	APPROVED
A	REMOVED RATING CHART	12/17/12	R.L.

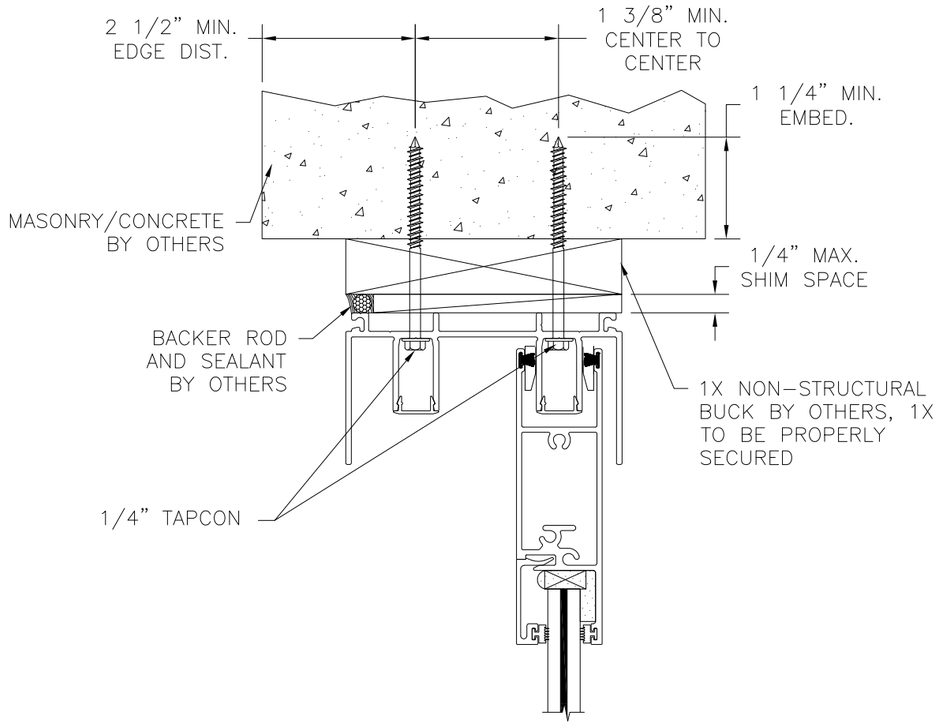

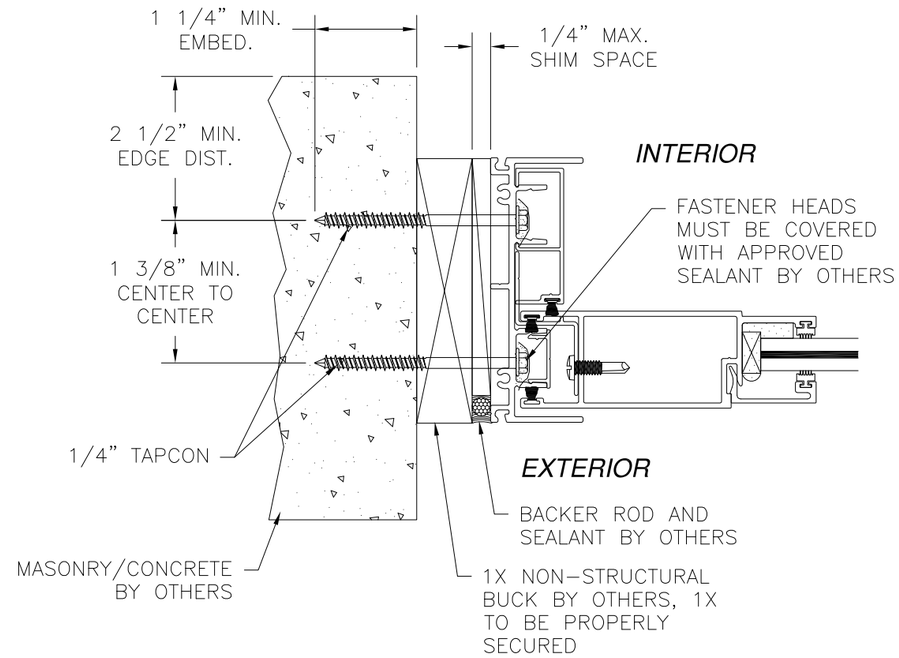

2 TRACK FRAME JAMB

1X BUCK TO MASONRY/CONCRETE INSTALLATION, 2TRACK SHOWN 3TRACK SIMILAR

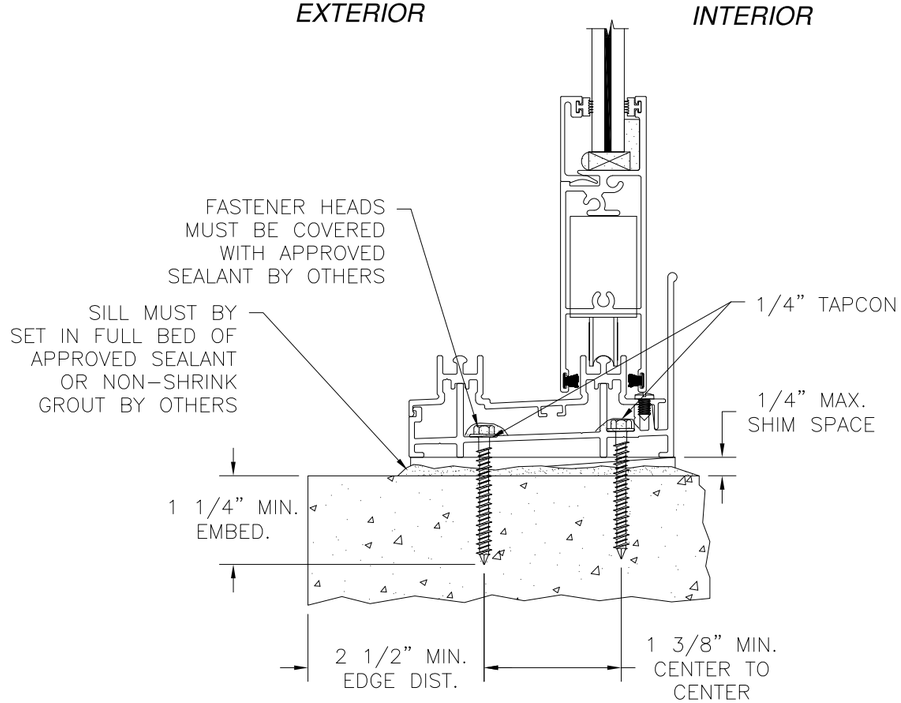

2 TRACK VERTICAL SECTION

MASONRY/CONCRETE INSTALLATION
2 TRACK SHOWN 3 TRACK SIMILAR

NOTE:
INTERIOR AND EXTERIOR FINISHES, BY OTHERS, NOT SHOWN FOR CLARITY.

SIGNED: 12/17/2012

WinDoor INCORPORATED
7500 AMSTERDAM DRIVE
ORLANDO, FL 32832
Phone: 407.481.8400
Fax: 407.481.0505
www.windoorinc.com

7000 HP SERIES IMPACT REINFORCED & NON-REINFORCED INSTALLATION DETAILS

DRAWN:	DWG NO.	REV
V.L.	08-01660	A

SCALE	DATE	SHEET
NTS	06/29/2012	10 OF 14

STATE OF TEXAS
LUIS R. LOMAS
101889
LICENSED
PROFESSIONAL ENGINEER

Luis R. Lomas P.E.
TX No.: 101889

REVISIONS			
REV	DESCRIPTION	DATE	APPROVED
A	REMOVED RATING CHART	12/17/12	R.L.

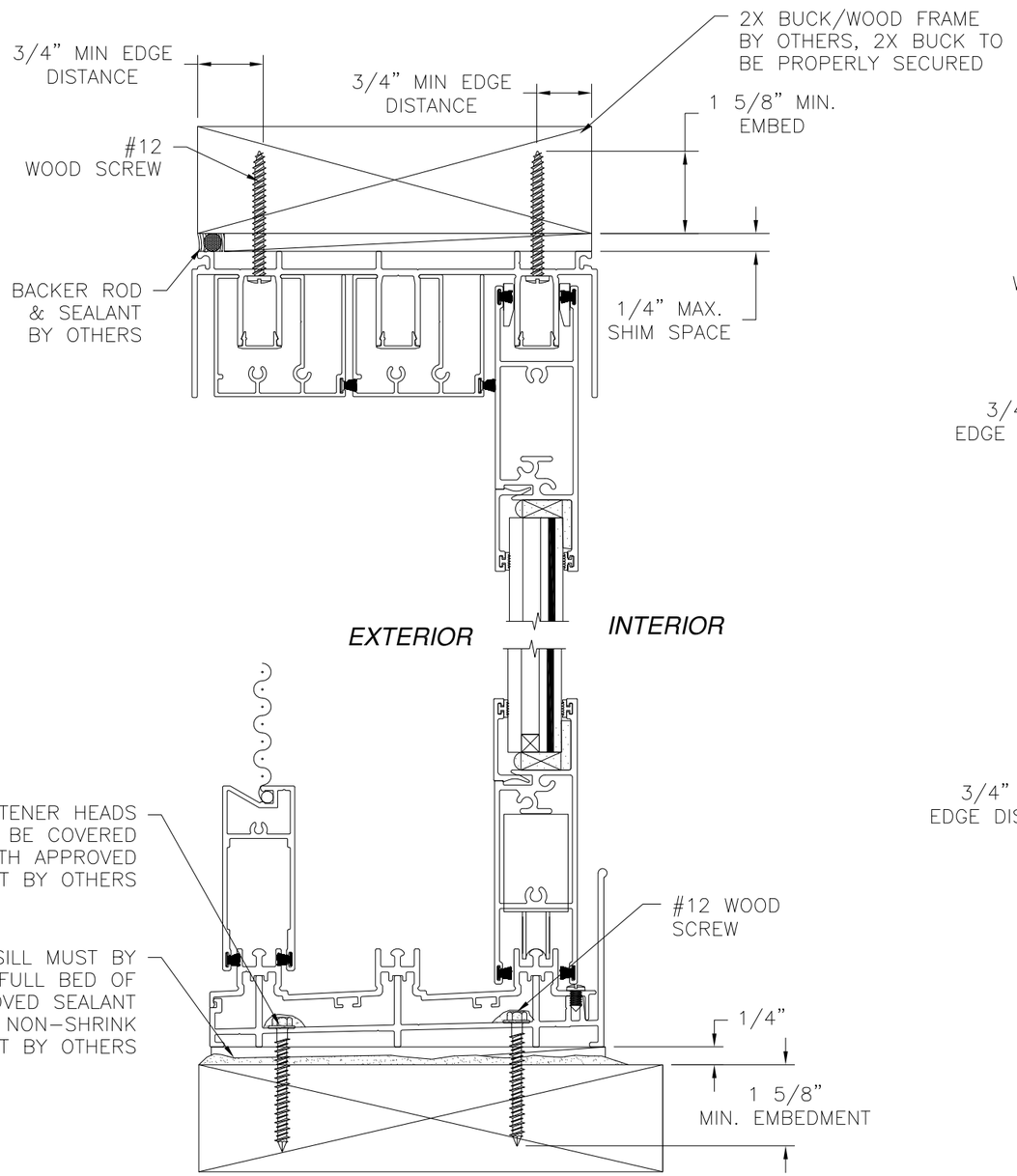

3 TRACK VERTICAL SECTION

2X BUCK/WOOD FRAME INSTALLATION
3 TRACK SHOWN 2 TRACK SIMILAR

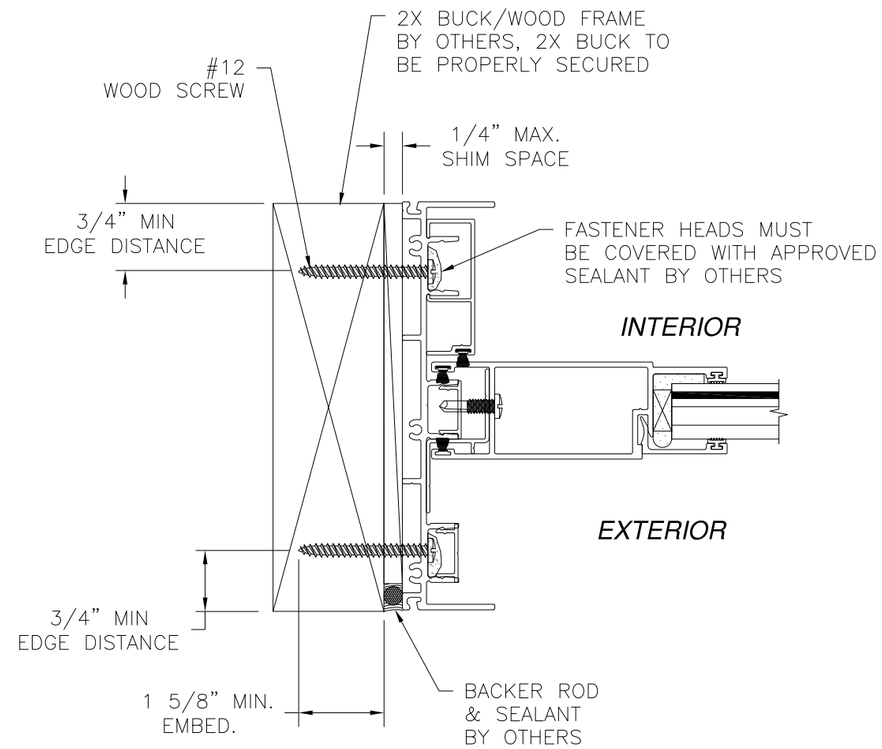

3 TRACK FRAME JAMB

2X BUCK/WOOD FRAME INSTALLATION
3 TRACK SHOWN 2 TRACK SIMILAR

SIGNED: 12/17/2012

WinDoor INCORPORATED
7500 AMSTERDAM DRIVE
ORLANDO, FL 32832
Phone: 407.481.8400
Fax: 407.481.0505
www.windoorinc.com

7000 HP SERIES IMPACT REINFORCED
& NON-REINFORCED
INSTALLATION DETAILS

DRAWN:	DWG NO.	REV
V.L.	08-01660	A
SCALE NTS	DATE 06/29/2012	SHEET 11 OF 14

Luis R. Lomas P.E.
TX No.: 101889

REVISIONS			
REV	DESCRIPTION	DATE	APPROVED
A	REMOVED RATING CHART	12/17/12	R.L.

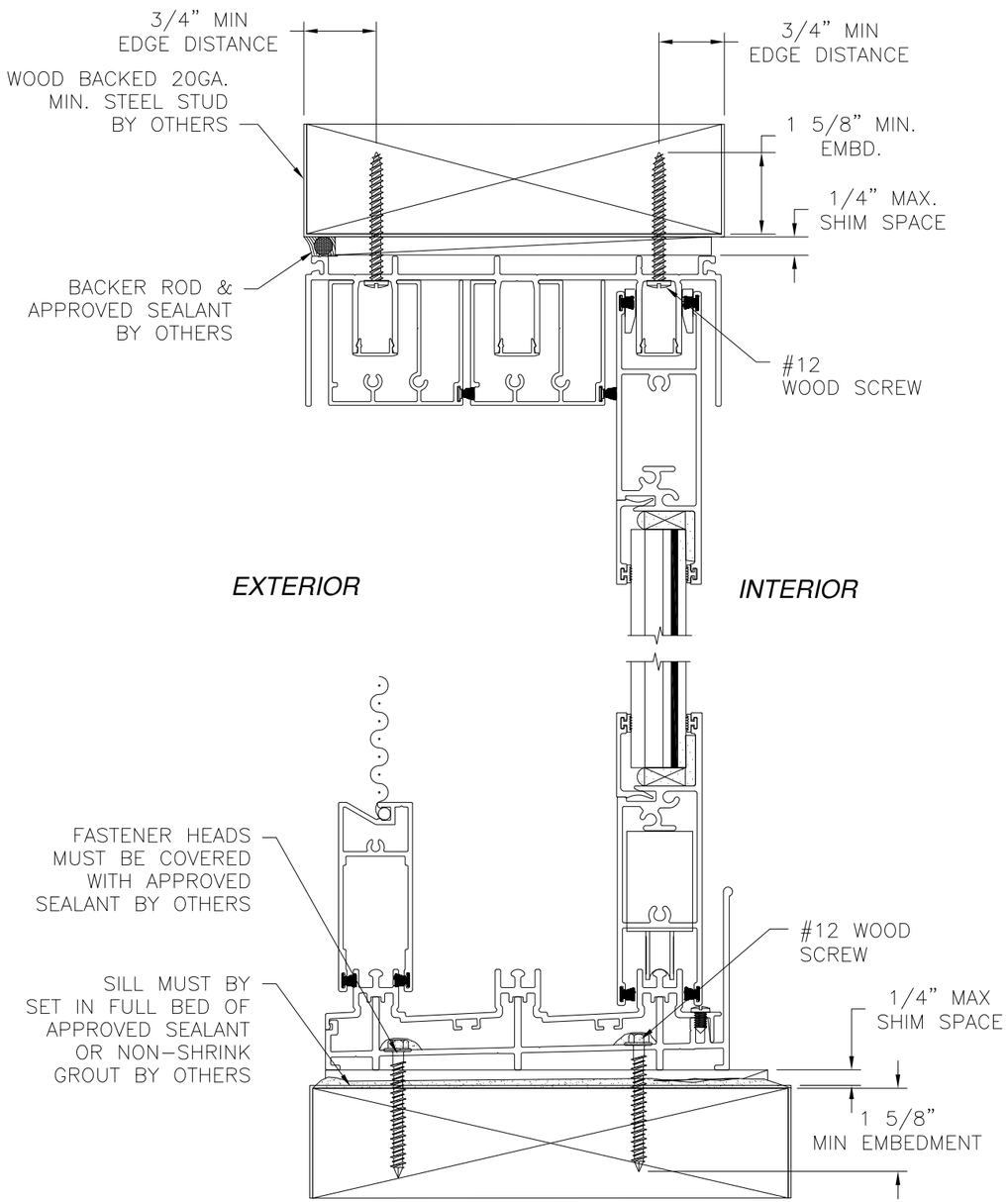

3 TRACK VERTICAL SECTION

WOOD BACKED 20GA. STEEL STUD INSTALLATION

3 TRACK SHOWN 2 TRACK SIMILAR

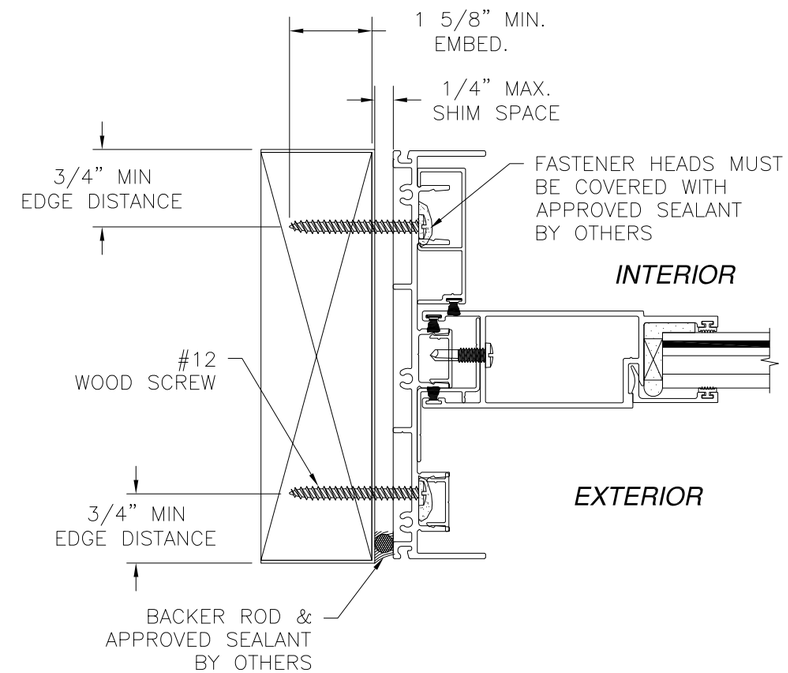

3 TRACK FRAME JAMB

WOOD BACKED 20GA. STEEL STUD INSTALLATION

3 TRACK SHOWN 2TRACK SIMILAR

SIGNED: 12/17/2012

WinDoor INCORPORATED

7500 AMSTERDAM DRIVE
ORLANDO, FL 32832
Phone: 407.481.8400
Fax: 407.481.0505
www.windoorinc.com

7000 HP SERIES IMPACT REINFORCED
& NON-REINFORCED
INSTALLATION DETAILS

DRAWN:	DWG NO.	REV
V.L.	08-01660	A

SCALE	DATE	SHEET
NTS	06/29/2012	12 OF 14

Luis R. Lomas P.E.
TX No.: 101889

REVISIONS			
REV	DESCRIPTION	DATE	APPROVED
A	REMOVED RATING CHART	12/17/12	R.L.

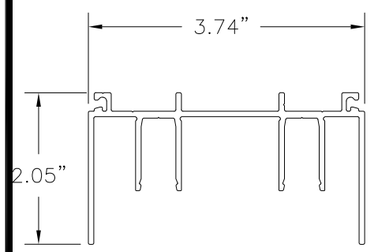

1 **2T FRAME HEAD**
6063-T6 ALUMINUM .095" THICK

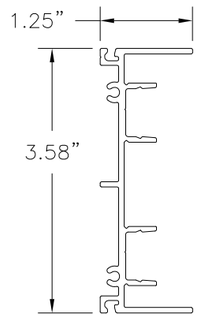

2 **2T FRAME JAMB**
6063-T6 ALUMINUM .095" THICK

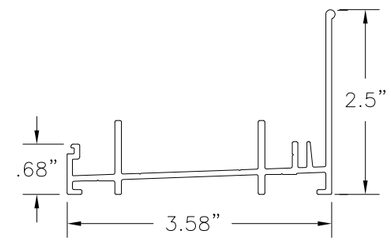

3 **2T SILL PAN 2 1/2" RISER**
6063-T6 ALUMINUM .075" THICK

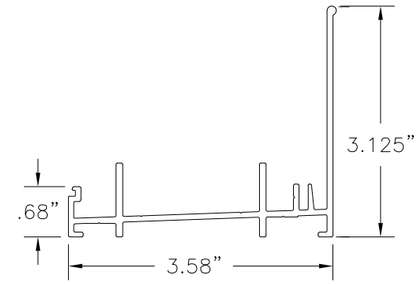

4 **2T SILL PAN 3 1/8" RISER**
6063-T6 ALUMINUM .075" THICK

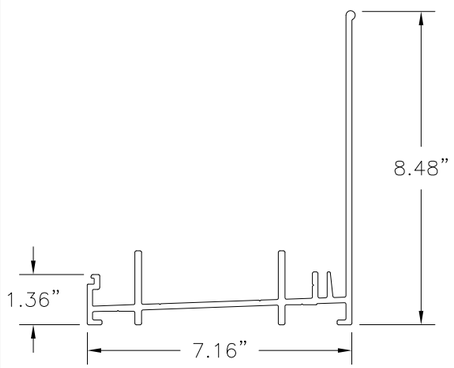

5 **2T SILL PAN 4 1/4" RISER**
6063-T6 ALUMINUM .075" THICK

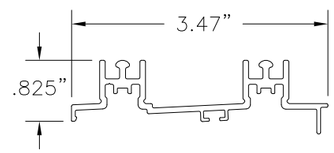

6 **2T SILL INSERT**
6063-T6 ALUMINUM .075" THICK

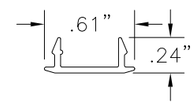

7 **TRACK COVER**
6063-T6 ALUMINUM .045" THICK

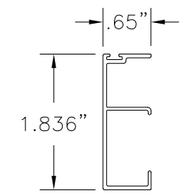

8 **RECESSED JAMB COVER**
6063-T6 ALUMINUM .050" THICK

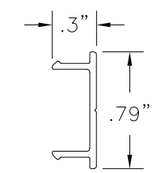

9 **JAMB COVER**
6063-T6 ALUMINUM .045" THICK

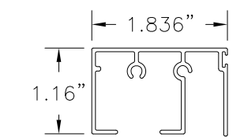

10 **PANEL STOP SILL COVER**
6063-T6 ALUMINUM .050" THICK

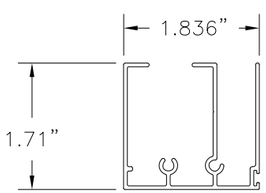

11 **PANEL STOP HEAD COVER**
6063-T6 ALUMINUM .050" THICK

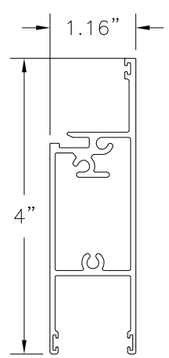

12 **TOP & BOTTOM RAIL**
6063-T6 ALUMINUM .070" THICK

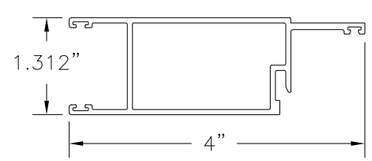

13 **LOCK/PLAIN STILE**
6063-T6 ALUMINUM .070" THICK

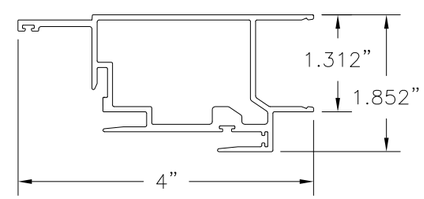

14 **INTERLOCK STILE LEFT**
6063-T6 ALUMINUM .070" THICK

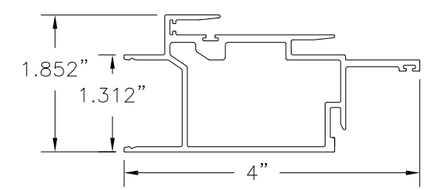

15 **INTERLOCK STILE RIGHT**
6063-T6 ALUMINUM .070" THICK

SIGNED: 12/17/2012

WinDoor INCORPORATED
7500 AMSTERDAM DRIVE
ORLANDO, FL 32832
Phone: 407.481.8400
Fax: 407.481.0505
www.windoorinc.com

7000 HP SERIES IMPACT REINFORCED
& NON-REINFORCED
COMPONENTS

DRAWN:	DWG NO.	REV
V.L.	08-01660	A
SCALE NTS	DATE 06/29/2012	SHEET 13 OF 14

STATE OF TEXAS
LUIS R. LOMAS
101889
LICENSED
PROFESSIONAL ENGINEER

Luis R. Lomas P.E.
TX No.: 101889

REVISIONS			
REV	DESCRIPTION	DATE	APPROVED
A	REMOVED RATING CHART	12/17/12	R.L.

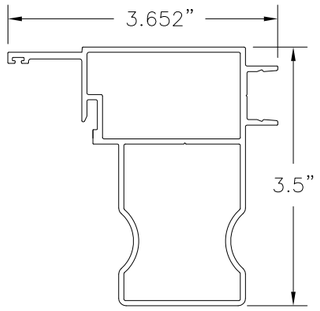

(16) MAL BUTT STILE
6063-T6 ALUMINUM .070" THICK

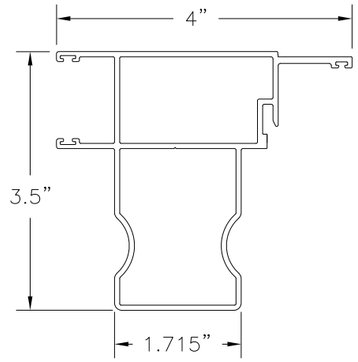

(17) LOCKING BUTT STILE
6063-T6 ALUMINUM .070" THICK

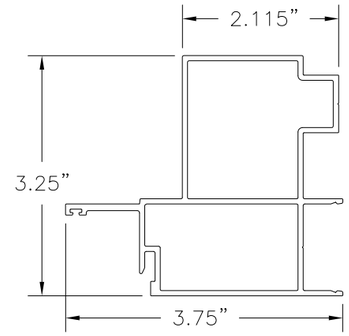

(18) INTERIOR FIXED BUTT STILE
6063-T6 ALUMINUM .070" THICK

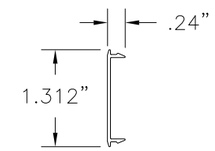

(19) INTERLOCK COVER
6063-T6 ALUMINUM .040" THICK

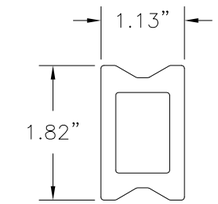

(20) REINFORCING BAR
6063-T6 ALUMINUM .200" THICK

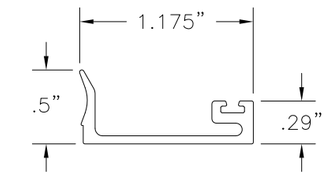

(21) 9/16" GLASS STOP
6063-T6 ALUMINUM .055" THICK

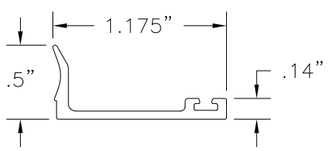

(22) 3/4" GLASS STOP
6063-T6 ALUMINUM .055" THICK

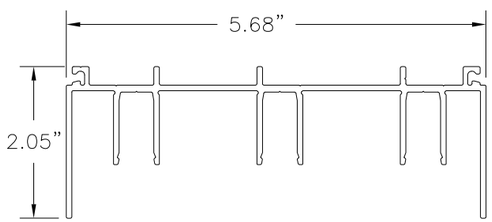

(50) 3T FRAME HEAD
6063-T6 ALUMINUM .095" THICK

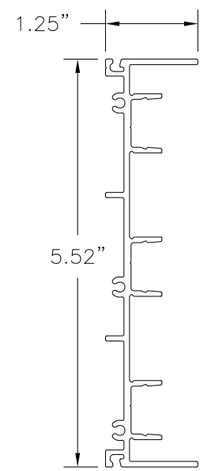

(51) 3T FRAME JAMB
6063-T6 ALUMINUM .095" THICK

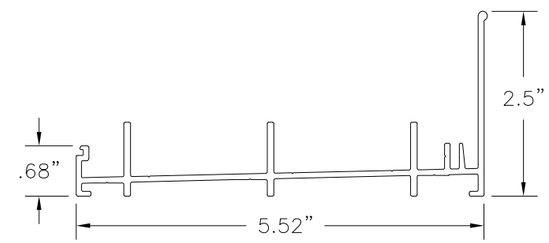

(52) 3T SILL PAN 2 1/2" RISER
6063-T6 ALUMINUM .075" THICK

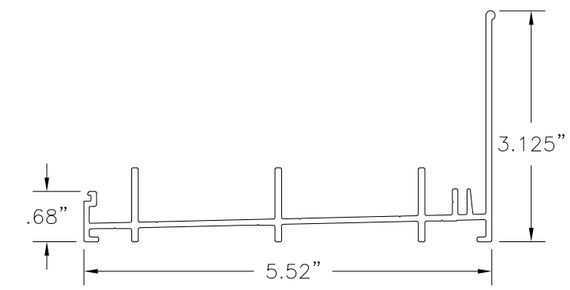

(53) 3T SILL PAN 3 1/8" RISER
6063-T6 ALUMINUM .075" THICK

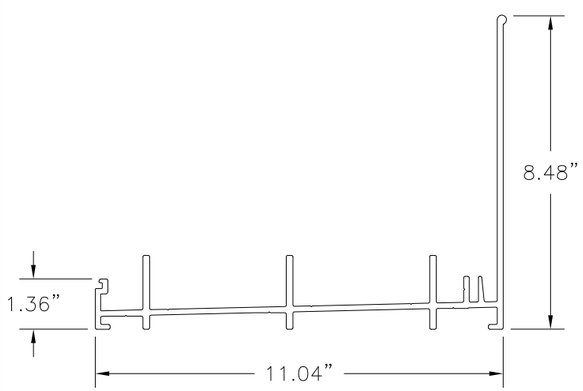

(54) 3T SILL PAN 4 1/4" RISER
6063-T6 ALUMINUM .075" THICK

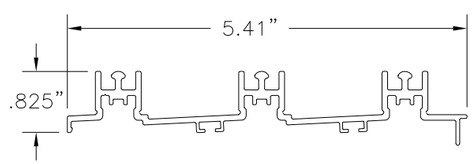

(55) 3T SILL INSERT
6063-T6 ALUMINUM .075" THICK

SIGNED: 12/17/2012

WinDoor INCORPORATED
7500 AMSTERDAM DRIVE
ORLANDO, FL 32832
Phone: 407.481.8400
Fax: 407.481.0505
www.windoorinc.com

7000 HP SERIES IMPACT REINFORCED & NON-REINFORCED COMPONENTS

DRAWN:	DWG NO.	REV
V.L.	08-01660	A
SCALE NTS	DATE 06/29/2012	SHEET 14 OF 14

STATE OF TEXAS
LUIS R. LOMAS
101889
LICENSED
PROFESSIONAL ENGINEER

Luis R. Lomas P.E.
TX No.: 101889