JELD-WEN WINDOWS & DOORS

DESIGN PRO / SMOOTH PRO FULL LITE NON-IMPACT

GENERAL NOTES:

1. THE PRODUCT SHOWN HEREIN IS DESIGNED AND MANUFACTURED TO COMPLY WITH THE CURRENT INTERNATIONAL RESIDENTIAL CODE (IRC), INTERNATIONAL BUILDING CODE (IBC), AND TEXAS REVISIONS, AND HAS BEEN EVALUATED ACCORDING TO THE FOLLOWING:
   - ASTM E330-02
   - ASTM E283-04
   - AAMA 1304-02
2. ADEQUACY OF THE EXISTING STRUCTURAL CONCRETE/MASONRY OR 2X FRAMING AS A MAIN WIND FORCE RESISTING SYSTEM CAPABLE OF WITHSTANDING AND TRANSFERRING APPLIED PRODUCT LOADS TO THE FOUNDATION IS THE RESPONSIBILITY OF THE ENGINEER OR ARCHITECT OF RECORD FOR THE PROJECT OF INSTALLATION.
3. THE INSTALLATION DETAILS DESCRIBED HEREIN ARE GENERIC AND MAY NOT REFLECT ACTUAL CONDITIONS FOR A SPECIFIC SITE. IF SITE CONDITIONS CAUSE INSTALLATION TO DEVIATE FROM THE REQUIREMENTS DETAILED HEREIN, A LICENSED ENGINEER OR ARCHITECT SHALL PREPARE SITE SPECIFIC DOCUMENTS FOR USE WITH THIS DOCUMENT.
4. APPROVED IMPACT PROTECTIVE SYSTEM **IS REQUIRED** ON THIS PRODUCT IN AREAS REQUIRING IMPACT RESISTANCE.
5. GLASS MEETS THE REQUIREMENTS OF ASTM E 1300 GLASS CHARTS. SEE SHEET 5 FOR GLAZING DETAIL.
6. FULL LITE APPROVAL COVERS USE OF FRACTIONAL GLAZING, INCLUDING INTERNAL GRID, BLINDS BETWEEN GLASS, DECORATIVE, AND EXTERNAL AND INTERNAL WROUGHT IRON. VENT LITES ARE QUALIFIED FOR 6'-8" DOORS ONLY. RADIUS (SHAPED) LITES ARE QUALIFIED FOR 6'-8" DOORS AT DP +/-50 PSF ONLY.
7. NOTE: AFCO H-497 SILL MEETS WATER INFILTRATION AT WATER TEST PRESSSURE (WTP) OF 9.75 PSF. REMAINING SILLS NOT RATED FOR WATER INFILTRATION. IF AUTHORITY HAVING JURISDICTION REQUIRES THAT PRODUCT MEETS THIS REQUIREMENT, PRODUCT SHALL BE USED WHEN INSTALLED AT LOCATION PROTECTED BY OVERHANG SUCH THAT OVERHANG (OH) RATIO = OH LENGTH ÷ OH HEIGHT IS ≥ 1.0

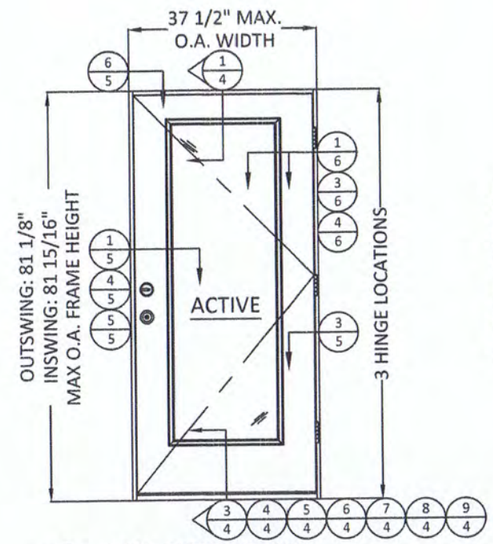

1/1 TYP. ELEVATION 1
6'-8" DOOR HEIGHT

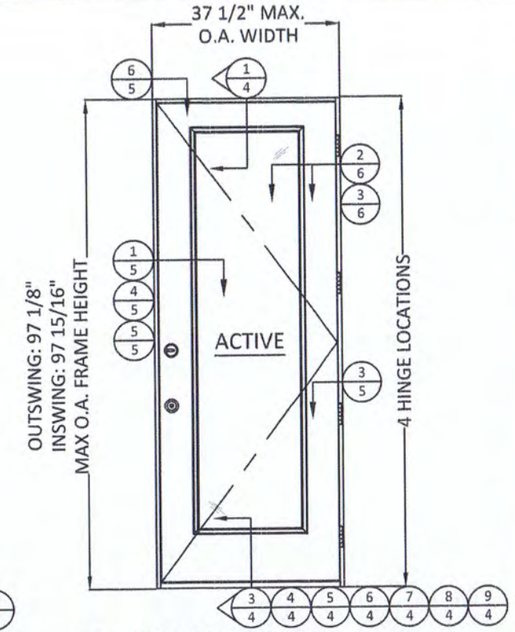

2/1 TYP. ELEVATION 2
8'-0" DOOR HEIGHT

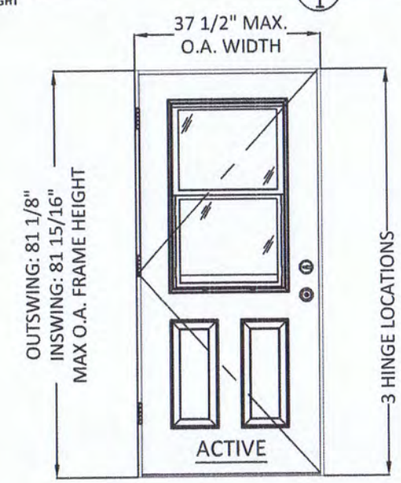

3/1 TYP. ELEVATION 3
6'-8" DOOR WITH OPTIONAL VENT LITE
SEE SHEET 6 FOR GLAZING DETAILS

NOTE:
DOORS SHOWN ABOVE MAY BE LEFT OR RIGHT HAND OPERATING DOORS.

CONFIGURATION	MAX. OVERALL NOMINAL SIZE		DESIGN PRESSURE (PSF)				MISSILE IMPACT RATING
			INSWING		OUTSWING		
	WIDTH	HEIGHT	POS.	NEG.	POS.	NEG.	
X	3'-0"	6'-8"	50*	50	50*	50	NON-IMPACT
X RADIUS	3'-0"	6'-8"	50*	50	50*	50	NON-IMPACT
X VENT	3'-0"	6'-8"	50*	50	50*	50	NON-IMPACT
X	3'-0"	8'-0"	50*	50	50*	50	NON-IMPACT

*SEE GENERAL NOTE 7, SHEET 1, FOR WATER INFILTRATION APPROVED SILLS.

TABLE OF CONTENTS

SHEET	REVISION	SHEET DESCRIPTION
1	A	TYPICAL ELEVATIONS, DESIGN PRESSURES, AND GENERAL NOTES
2	A	TYPICAL ANCHOR LAYOUTS AND NOTES
3	-	OPTIONAL 2X BUCK ANCHORING DETAILS
4	A	VERTICAL ASSEMBLIES
5	A	HORIZONTAL ASSEMBLIES
6	A	GLAZING DETAILS
7	A	WOOD SUBSTRATES
8	A	CONCRETE SUBSTRATES
9	A	COMPONENTS & BILL OF MATERIALS

PREPARED BY:
BUILDING DROPS, INC.
398 E. DANIA BEACH BLVD., STE. 338
DANIA BEACH, FL 33004
PH: (954)399-8478
FAX: (954)744.4738
WEB: www.buildingdrops.com

TITLE: DESIGN PRO/SMOOTH PRO FULL LITE NON-IMPACT
TYPICAL ELEVATIONS, DESIGN PRESSURES, AND GENERAL NOTES

3737 LAKEPORT BLVD.,
KLAMATH FALLS, OR 97601
PH: (541)882-3451
FAX: (541)850-2609

JELD-WEN WINDOWS & DOORS

REMARKS	BY	DATE

THIS DOCUMENT IS THE PROPERTY OF BUILDING DROPS, INC. AND SHALL NOT BE REPRODUCED IN WHOLE OR PART WITHOUT WRITTEN CONSENT OF BUILDING DROPS, INC. ALTERATIONS, ADDITIONS, HIGHLIGHTING, OR OTHER MARKINGS TO THIS DOCUMENT ARE NOT PERMITTED AND INVALIDATE OUR CERTIFICATION.

STATE OF TEXAS
ALEXIS SPYROU
102957
LICENSED
PROFESSIONAL ENGINEER

ALEXIS SPYROU
TEXAS P.E. NO. 102957
398 DANIA BEACH BLVD. STE. 338
DANIA BEACH, FL 33004
TBPE FIRM NO. 13734

DATE: 07.10.14
DWG. BY: GL
CHK. BY: SS
SCALE: NTS
DWG. #: A010920
SHEET: 1 OF 9

INSTALLATION NOTES:

1. ONE (1) INSTALLATION ANCHOR IS REQUIRED AT EACH ANCHOR LOCATION SHOWN.
2. SHIM AS REQUIRED AT EACH INSTALLATION ANCHOR WITH LOAD BEARING SHIM(S). MAXIMUM ALLOWABLE SHIM STACK TO BE 1/4 INCH. SHIM WHERE SPACE OF 1/16 INCH OR GREATER OCCURS. SHIM(S) SHALL BE CONSTRUCTED OF A NON-COMPRESSIBLE COMPOSITE OR BETTER.
3. MINIMUM EMBEDMENT AND EDGE DISTANCE EXCLUDE WALL FINISHES, INCLUDING BUT NOT LIMITED TO STUCCO, FOAM, BRICK VENEER, AND SIDING.
4. INSTALLATION ANCHORS AND ASSOCIATED HARDWARE MUST BE MADE OF CORROSION RESISTANT MATERIAL OR HAVE A CORROSION RESISTANT COATING, AND SHALL BE INSTALLED IN ACCORDANCE WITH ANCHOR MANUFACTURER'S INSTALLATION INSTRUCTIONS.
5. FOR HOLLOW BLOCK AND GROUT FILLED BLOCK, DO NOT INSTALL INSTALLATION ANCHORS INTO MORTAR JOINTS. EDGE DISTANCE IS MEASURED FROM FREE EDGE OF BLOCK OR EDGE OF MORTAR JOINT INTO FACE SHELL OF BLOCK.
6. FOR 2X STUD CONSTRUCTION, ANCHORING OF THESE PRODUCTS SHALL BE THE SAME AS FOR 2X BUCK CONCRETE/MASONRY CONSTRUCTION.
7. INSTALLATION ANCHOR CAPACITIES FOR PRODUCTS HEREIN ARE BASED ON SUBSTRATE MATERIALS WITH THE FOLLOWING PROPERTIES:
   A. WOOD - MINIMUM SPECIFIC GRAVITY OF 0.42.
   B. CONCRETE -MINIMUM COMPRESSIVE STRENGTH OF 3000 PSI.
   C. GROUT-FILLED CMU- UNIT STRENGTH CONFORMS TO ASTM C-90 WITH MINIMUM COMPRESSIVE STRENGTH OF 2000 PSI AND GROUT CONFORMS TO ASTM C 476, MINIMUM GROUT COMPRESSIVE STRENGTH OF 2000 PSI.
   D. HOLLOW BLOCK CMU - UNIT STRENGTH CONFORMS TO ASTM C-90 WITH MINIMUM COMPRESSIVE STRENGTH OF 2000 PSI.
8. SEE SHEETS 7 AND 8 FOR MORE DETAILS OF THE INSTALLATION REQUIREMENTS, INCLUDING ANCHOR LOCATIONS, EDGE DISTANCES, EMBEDMENTS, AND SHIM SPACING.
9. OPTIONALLY, ANCHORS CAN BE PLACED IN NARROW SECTION OF HEAD OR JAMB AS LONG AS MINIMUM EMBEDMENT AND EDGE DISTANCE ARE ACHIEVED.

ANCHOR TABLE

ANCHOR TYPE	ANCHOR SIZE	SUBSTRATE	MIN. EMBEDMENT	MIN. EDGE DISTANCE	6'8" DOORS	8'0" DOORS
					MAX. O.C. SPACING AT JAMBS	MAX. O.C. SPACING AT JAMBS
WOOD SCREW	#10	2X WOOD BUCK OR FRAMING	1-1/2"	3/4"	17-1/2"	17-1/4"
ITW TAPCON	3/16"	CONCRETE/CMU	1-1/4"	2-1/2"	17-1/2"	17-1/4"
ELCO ULTRACON	1/4"	CONCRETE/CMU	1-3/8" - CONC. 1-1/4" - CMU	1"	17-1/2"	17-1/4"
ITW TAPCON	3/16"	CONCRETE/CMU	1-1/4"	1"	10"	14-3/8"

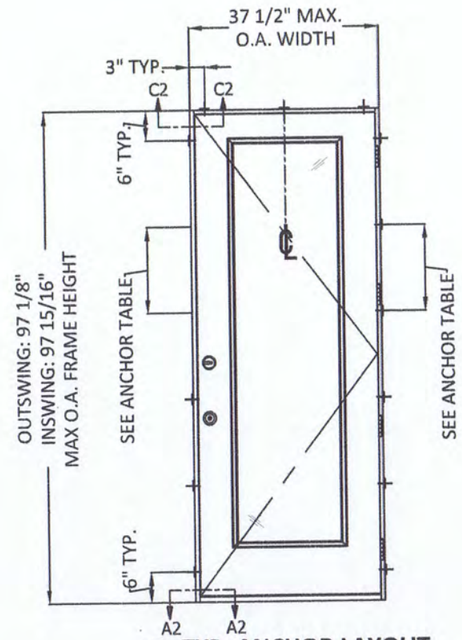

1/2 TYP. ANCHOR LAYOUT
6'-8" & 8'-0" DOOR HEIGHT

NOTE:
NO ANCHORS REQUIRED AT THE SILL FOR SINGLE DOORS (X) ONLY.

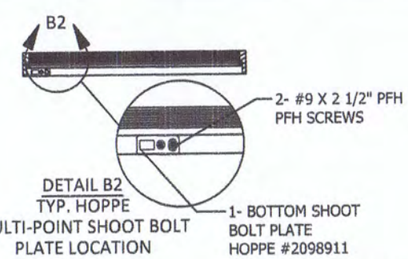

A/2 SILL SECTION VIEW
INSWING SHOWN OUTSWING SIMILAR
SEE DETAIL B2

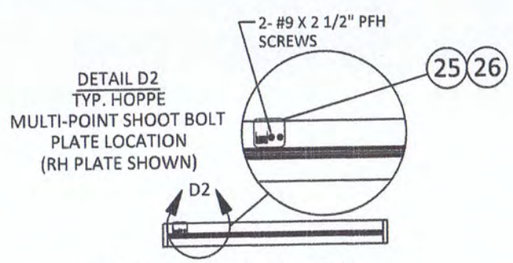

C/2 HEAD SECTION VIEW
INSWING SHOWN OUTSWING SIMILAR
SEE DETAIL D2

PREPARED BY:
BUILDING DROPS, INC.
398 E. DANIA BEACH BLVD., STE. 338
DANIA BEACH, FL 33004
PH: (954)399-8478
FAX: (954)744.4738
WEB: www.buildingdrops.com

TITLE: *DESIGN PRO/SMOOTH PRO FULL LITE NON-IMPACT*
ANCHOR LAYOUTS AND NOTES

JELD-WEN WINDOWS & DOORS
3737 LAKEPORT BLVD.,
KLAMATH FALLS, OR 97601
PH: (541)882-3451
FAX: (541)850-2609

REMARKS	BY	DATE

THIS DOCUMENT IS THE PROPERTY OF BUILDING DROPS, INC. AND SHALL NOT BE REPRODUCED IN WHOLE OR PART WITHOUT WRITTEN CONSENT OF BUILDING DROPS, INC. ALTERATIONS, ADDITIONS, HIGHLIGHTING, OR OTHER MARKINGS TO THIS DOCUMENT ARE NOT PERMITTED AND INVALIDATE OUR CERTIFICATION.

STATE OF TEXAS
ALEXIS SPYROU
102957
LICENSED
PROFESSIONAL ENGINEER
9-9-14

ALEXIS SPYROU
TEXAS P.E. NO. 102957
398 DANIA BEACH BLVD. STE. 338
DANIA BEACH, FL 33004
TBPE FIRM NO. 13734

DATE: 07.10.14
DWG. BY: GL
CHK. BY: SS
SCALE: NTS
DWG. #: A010920
SHEET: 2 OF 9

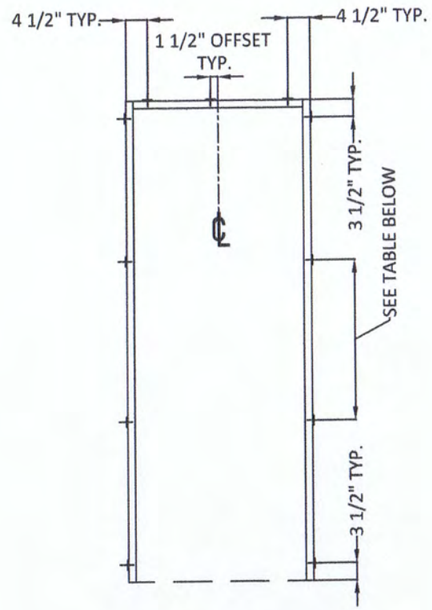

1/3 TYP. ANCHOR LAYOUT
OPTIONAL 2X BUCK IN CONCRETE/MASONRY

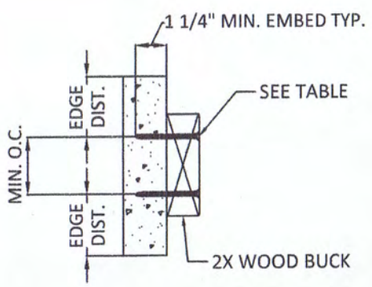

3/3 2X WOOD BUCK INSTALL.
CROSS SECTION

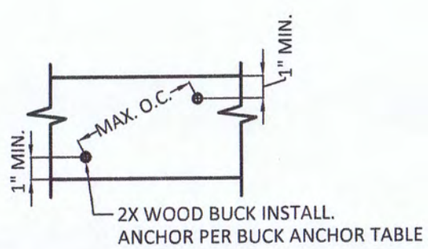

4/3 2X WOOD BUCK INSTALL.
SIDE VIEW

2X BUCK ANCHOR TABLE

ANCHOR TYPE	ANCHOR SIZE	SUBSTRATE	MIN. EMBEDMENT	MIN. EDGE DIST. TO SUBSTRATE	MIN. CENTER TO CENTER DISTANCE	6'8" DOORS	8'0" DOORS
						MAX. O.C. SPACING AT JAMBS	MAX. O.C. SPACING AT JAMBS
ITW TAPCON	1/4"	CONCRETE/CMU	1-1/4"	2-1/2"	4"	25"	30-1/4"
ELCO ULTRACON	1/4"	CONCRETE/CMU	1-3/8" - CONC. 1-1/4" - CMU	1"	4"	25"	30-1/4"

NOTES:

1. 2X BUCK IS NOT FOR INSTALLATION AT SILL.
2. ANCHORS MAY BE STAGGERED AS SHOWN IN DETAIL 4/3.

PREPARED BY:

BUILDING DROPS, INC.
398 E. DANIA BEACH BLVD., STE. 338
DANIA BEACH, FL 33004
PH: (954)399-8478
FAX: (954)744.4738
WEB: www.buildingdrops.com

TITLE: *DESIGN PRO/SMOOTH PRO FULL LITE NON-IMPACT*
OPTIONAL 2X BUCK ANCHORING DETAILS

3737 LAKEPORT BLVD.,
KLAMATH FALLS, OR 97601
PH: (541)882-3451
FAX: (541)850-2609

JELD-WEN WINDOWS & DOORS

REMARKS	BY	DATE

THIS DOCUMENT IS THE PROPERTY OF BUILDING DROPS, INC. AND SHALL NOT BE REPRODUCED IN WHOLE OR PART WITHOUT WRITTEN CONSENT OF BUILDING DROPS, INC. ALTERATIONS, ADDITIONS, HIGHLIGHTING, OR OTHER MARKINGS TO THIS DOCUMENT ARE NOT PERMITTED AND INVALIDATE CERTIFICATION.

STATE OF TEXAS
ALEXIS SPYROU
102957
LICENSED
PROFESSIONAL ENGINEER

ALEXIS SPYROU
TEXAS P.E. NO. 102957
398 DANIA BEACH BLVD. STE. 338
DANIA BEACH, FL. 33004
TBPE FIRM NO. 13734

DATE: 07.10.14
DWG. BY: GL
CHK. BY: SS
SCALE: NTS
DWG. #: A010920
SHEET: 3 OF 9

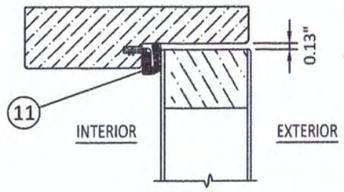

1/4 OPERABLE HEAD

OUTSWING SHOWN - INSWING SIMILAR

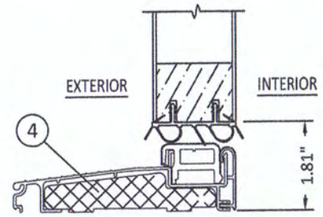

3/4 OPERABLE SILL

INSWING
ENDURA ZAIL4565F

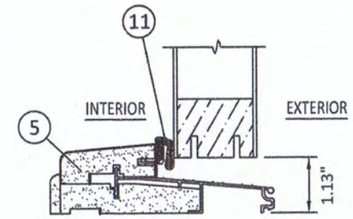

4/4 OPERABLE SILL

OUTSWING
AFCO J-2297

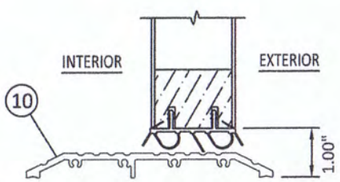

5/4 OPERABLE ADA SILL

INSWING/OUTSWING
ENDURA HCI5000

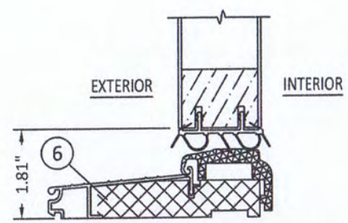

6/4 OPERABLE SILL

INSWING
AFCO A-276/P-2000

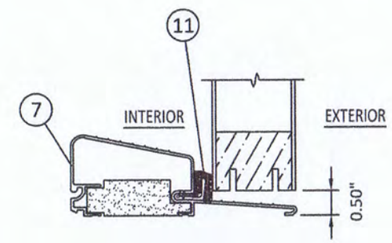

7/4 OPERABLE SILL

OUTSWING
OPTIONAL AFCO H-497

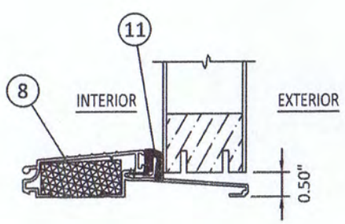

8/4 OPERABLE SILL

OUTSWING
OPTIONAL AFCO A-117

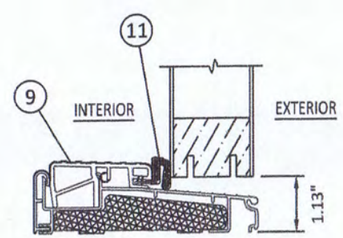

9/4 OPERABLE SILL

OUTSWING
OPTIONAL ENDURA ZOBL4565F

PREPARED BY:

BUILDING DROPS, INC.
398 E. DANIA BEACH BLVD., STE. 338
DANIA BEACH, FL 33004
PH: (954)399-8478
FAX: (954)744.4738
WEB: www.buildingdrops.com

TITLE: *DESIGN PRO/SMOOTH PRO FULL LITE NON-IMPACT*

VERTICAL ASSEMBLIES

3737 LAKEPORT BLVD.,
KLAMATH FALLS, OR 97601
PH: (541)882-3451
FAX: (541)850-2609

JELD-WEN WINDOWS & DOORS

REMARKS	BY	DATE

THIS DOCUMENT IS THE PROPERTY OF BUILDING DROPS, INC. AND SHALL NOT BE REPRODUCED IN WHOLE OR PART WITHOUT WRITTEN CONSENT OF BUILDING DROPS, INC. ALTERATIONS, ADDITIONS, HIGHLIGHTING, OR OTHER MARKINGS TO THIS DOCUMENT ARE NOT PERMITTED AND INVALIDATE OUR CERTIFICATION.

STATE OF TEXAS
ALEXIS SPYROU
102957
LICENSED
PROFESSIONAL ENGINEER

ALEXIS SPYROU
TEXAS P.E. NO. 102957
398 DANIA BEACH BLVD. STE. 338
DANIA BEACH, FL 33004
TBPE FIRM NO. 13734

DATE: 07.10.14

DWG. BY: GL | CHK. BY: SS

SCALE: NTS

DWG. #: A010920

SHEET: 4 OF 9

HINGE SCHEDULE	
DOOR HEIGHT	QUANTITY
6'-8"	3
8'-0"	4

HINGE DETAIL AT JAMB:
PLACE #9 X 2-1/2" PFH SCREW NEXT TO WEATHERSTRIP

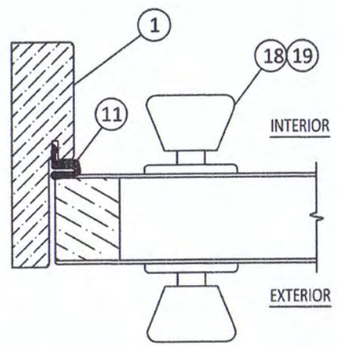

1/5 LOCK JAMB
OUTSWING SHOWN - INSWING SIMILAR

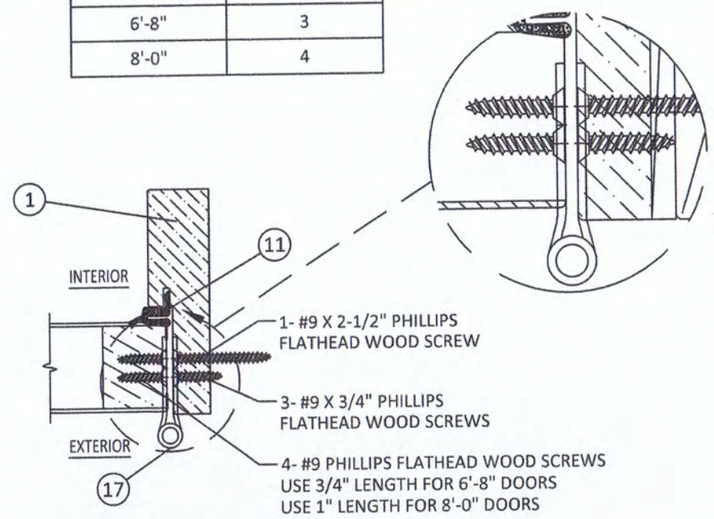

3/5 HINGE JAMB
OUTSWING SHOWN - INSWING SIMILAR

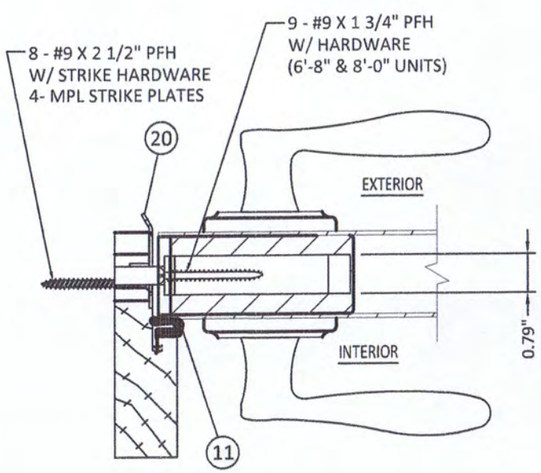

4/5 ROCKWELL MULTI-POINT LOCK JAMB
OUTSWING SHOWN - INSWING SIMILAR

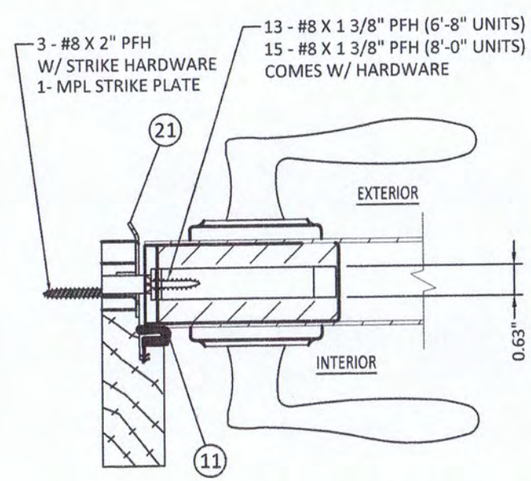

5/5 HOPPE MULTI-POINT LOCK JAMB
OUTSWING SHOWN - INSWING SIMILAR

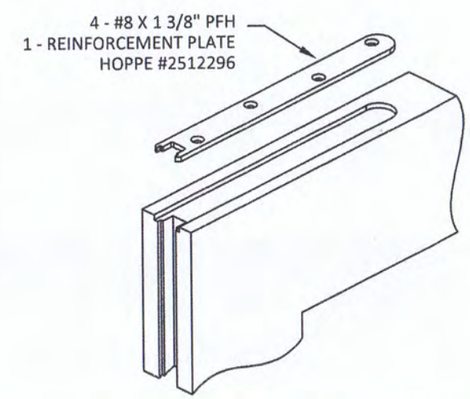

6/5 HOPPE MULTI-POINT LOCK
TOP REINFORCEMENT PLATE - ACTIVE PANEL ONLY

PREPARED BY:
BUILDING DROPS, INC.
398 E. DANIA BEACH BLVD., STE. 338
DANIA BEACH, FL 33004
PH: (954)399-8478
FAX: (954)744.4738
WEB: www.buildingdrops.com

TITLE: *DESIGN PRO/SMOOTH PRO FULL LITE NON-IMPACT*
HORIZONTAL ASSEMBLIES

3737 LAKEPORT BLVD.,
KLAMATH FALLS, OR 97601
PH: (541)882-3451
FAX: (541)850-2609

JELD-WEN WINDOWS & DOORS

REMARKS	BY	DATE

THIS DOCUMENT IS THE PROPERTY OF BUILDING DROPS, INC. AND SHALL NOT BE REPRODUCED IN WHOLE OR PART WITHOUT WRITTEN CONSENT OF BUILDING DROPS, INC. ALTERATIONS, ADDITIONS, HIGHLIGHTING, OR OTHER MARKINGS TO THIS DOCUMENT ARE NOT PERMITTED AND INVALIDATE CERTIFICATION.

STATE OF TEXAS
ALEXIS SPYROU
102957
LICENSED
PROFESSIONAL ENGINEER
7/9/14

ALEXIS SPYROU
TEXAS P.E. NO. 102957
398 DANIA BEACH BLVD. STE. 338
DANIA BEACH, FL 33004
TBPE FIRM NO. 13734

DATE: 07.10.14
DWG. BY: GL
CHK. BY: SS
SCALE: NTS
DWG. #: A010920
SHEET: 5 OF 9

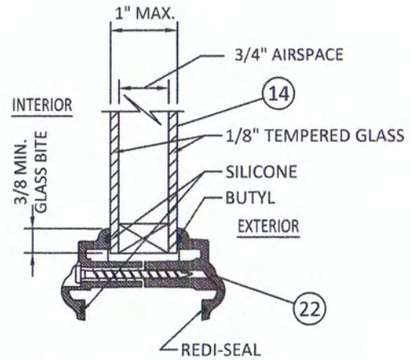

1/6 6'-8" GLAZING DETAIL

20 1/2" MAX. D.L.O. WIDTH
62 1/2" MAX. D.L.O. HEIGHT

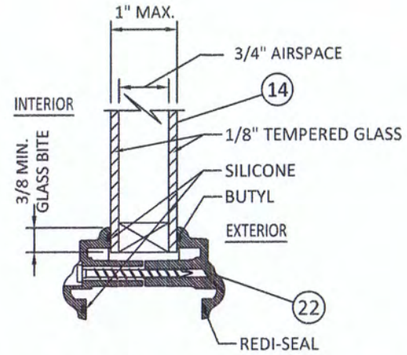

2/6 8'-0" GLAZING DETAIL

20 1/2" MAX. D.L.O. WIDTH
78 1/2" MAX. D.L.O. HEIGHT

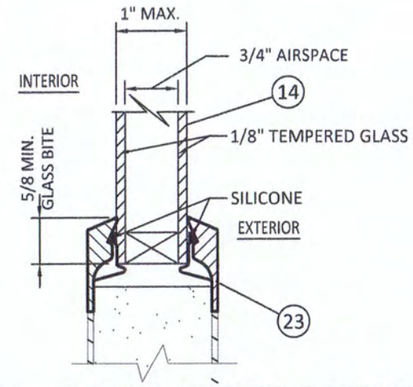

3/6 FLUSH GLAZE DETAIL

23 7/8" MAX. D.L.O. WIDTH
78 7/8" MAX. D.L.O. HEIGHT

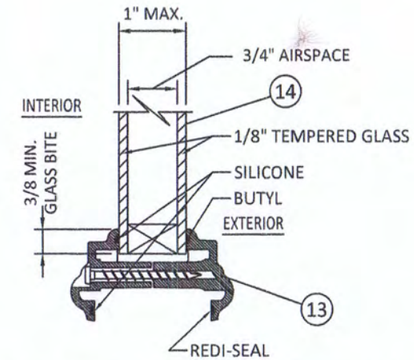

4/6 GLAZING DETAIL

FOR OVAL, SUNBURST, AND ROUND TOPS
ONLY IN 6'8" UNITS AT DP+/- 50 PSF

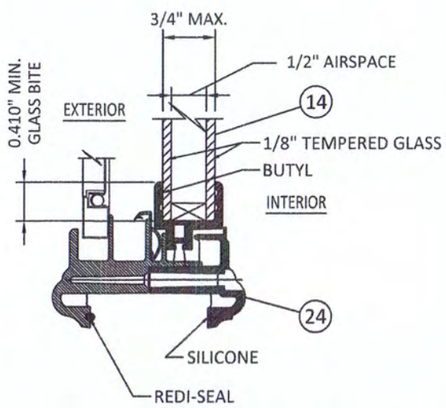

5/6 GLAZING DETAIL

FOR HALF LITE VENT LITES
IN 6'8" UNITS ONLY

NOTE:
FRACTIONAL GLAZING, INCLUDING INTERNAL GRID, BLINDS BETWEEN GLASS, DECORATIVE, EXTERNAL AND INTERNAL WROUGHT IRON AND RADIUS (SHAPED) LITES ARE APPROVED IN ALL GLAZING DETAILS SHOWN ABOVE.

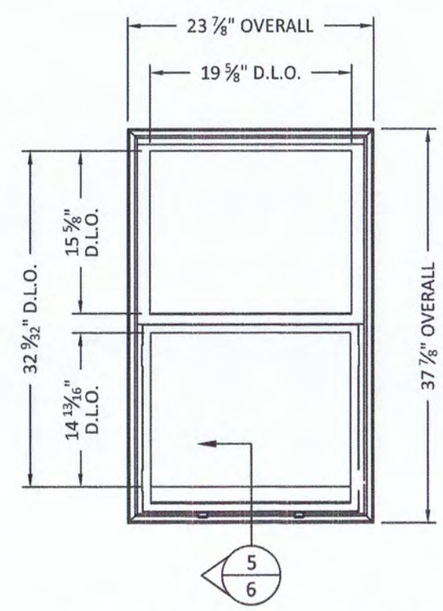

24 ODL VENT LITE ASSEMBLY

PREPARED BY:

BUILDING DROPS, INC.
398 E. DANIA BEACH BLVD., STE. 338
DANIA BEACH, FL 33004
PH: (954)399-8478
FAX: (954)744.4738
WEB: www.buildingdrops.com

TITLE: *DESIGN PRO/SMOOTH PRO FULL LITE NON-IMPACT*

GLAZING DETAILS

3737 LAKEPORT BLVD.,
KLAMATH FALLS, OR 97601
PH: (541)882-3451
FAX: (541)850-2609

JELD-WEN WINDOWS & DOORS

REMARKS	BY	DATE

THIS DOCUMENT IS THE PROPERTY OF BUILDING DROPS, INC. AND SHALL NOT BE REPRODUCED IN WHOLE OR PART WITHOUT WRITTEN CONSENT OF BUILDING DROPS, INC. ALTERATIONS, ADDITIONS, HIGHLIGHTING, OR OTHER MARKINGS TO THIS DOCUMENT ARE NOT PERMITTED AND INVALIDATE OUR CERTIFICATION.

STATE OF TEXAS
ALEXIS SPYROU
102957
LICENSED
PROFESSIONAL ENGINEER

ALEXIS SPYROU
TEXAS P.E. NO. 102957
398 DANIA BEACH BLVD. STE. 338
DANIA BEACH, FL 33004
TBPE FIRM NO. 13734

DATE: 07.10.14

DWG. BY: GL | CHK. BY: SS

SCALE: NTS

DWG. #: A010920

SHEET: 6 OF 9

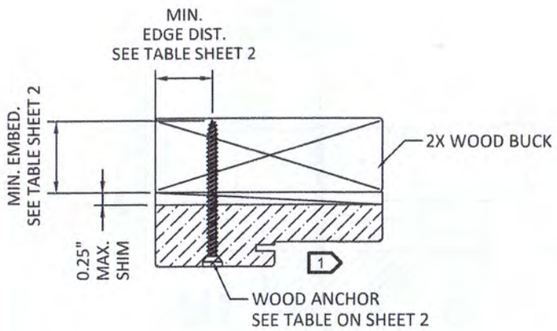

1/7 HEAD (TYPICAL)

OUTSWING SHOWN - INSWING SIMILAR

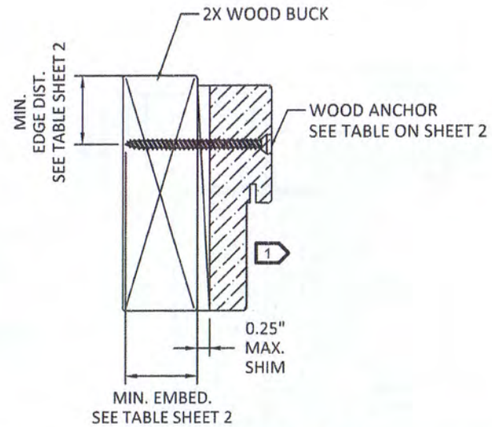

2/7 JAMB (TYPICAL)

OUTSWING SHOWN - INSWING SIMILAR

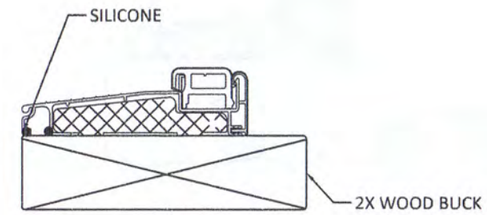

3/7 OPERABLE SILL

INSWING - NO ANCHOR REQUIRED
ENDURA ZAIL4565F

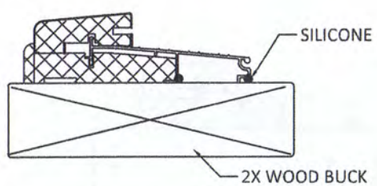

4/7 OPERABLE SILL

OUTSWING - NO ANCHOR REQUIRED
AFCO J-2297

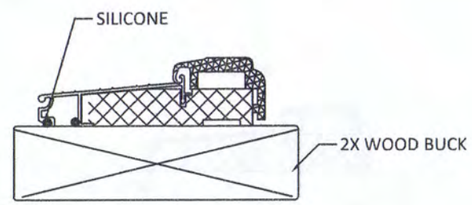

6/7 OPERABLE SILL

INSWING - NO ANCHOR REQUIRED
AFCO A-276/P-2000

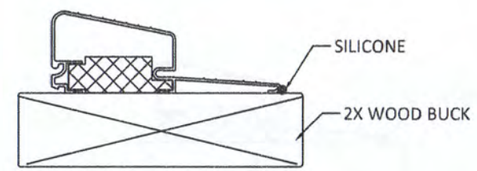

7/7 OPERABLE SILL

OUTSWING - NO ANCHOR REQUIRED
AFCO H-497

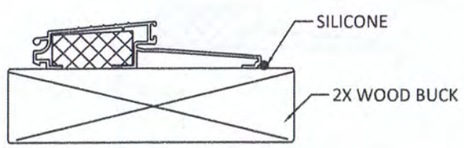

8/7 OPERABLE SILL

OUTSWING - NO ANCHOR REQUIRED
AFCO A-117

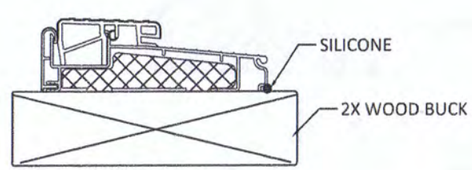

9/7 OPERABLE SILL

OUTSWING - NO ANCHOR REQUIRED
ENDURA ZOBL4565F

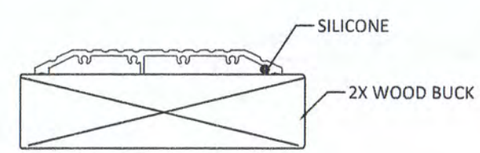

10/7 OPERABLE ADA SILL

INSWING/OUTSWING - NO ANCHOR REQUIRED
ENDURA HCI5000

1 OPTIONALLY, ANCHOR CAN BE PLACED IN NARROW SECTION OF HEAD OR JAMB AS LONG AS MINIMUM EMBEDMENT AND EDGE DISTANCE ARE ACHIEVED.

PREPARED BY:
BUILDING DROPS, INC.
398 E. DANIA BEACH BLVD., STE. 338
DANIA BEACH, FL 33004
PH: (954)399-8478
FAX: (954)744.4738
WEB: www.buildingdrops.com

TITLE: *DESIGN PRO/SMOOTH PRO FULL LITE NON-IMPACT*
WOOD INSTALLATION

3737 LAKEPORT BLVD.,
KLAMATH FALLS, OR 97601
PH: (541)882-3451
FAX: (541)850-2609
JELD-WEN WINDOWS & DOORS

REMARKS	BY	DATE

THIS DOCUMENT IS THE PROPERTY OF BUILDING DROPS, INC. AND SHALL NOT BE REPRODUCED IN WHOLE OR PART WITHOUT WRITTEN CONSENT OF BUILDING DROPS, INC. ALTERATIONS, ADDITIONS, HIGHLIGHTING, OR OTHER MARKINGS TO THIS DOCUMENT ARE NOT PERMITTED AND INVALIDATE OUR CERTIFICATION.

STATE OF TEXAS
ALEXIS SPYROU
102957
LICENSED
PROFESSIONAL ENGINEER
97974

ALEXIS SPYROU
TEXAS P.E. NO. 102957
398 DANIA BEACH BLVD. STE. 338
DANIA BEACH, FL 33004
TBPE FIRM NO. 13734

DATE: 07.10.14
DWG. BY: GL
CHK. BY: SS
SCALE: NTS
DWG. #: A010920
SHEET: 7 OF 9

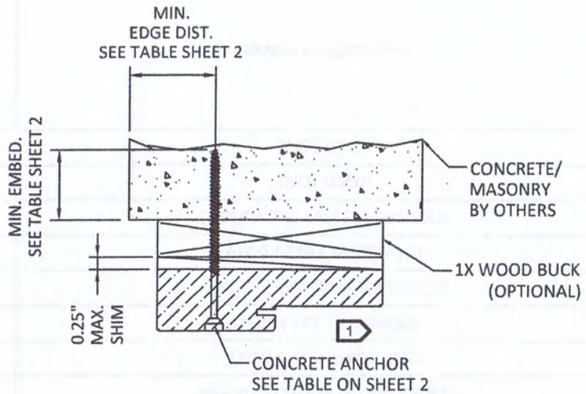

1/8 HEAD (TYPICAL)

OUTSWING SHOWN - INSWING SIMILAR

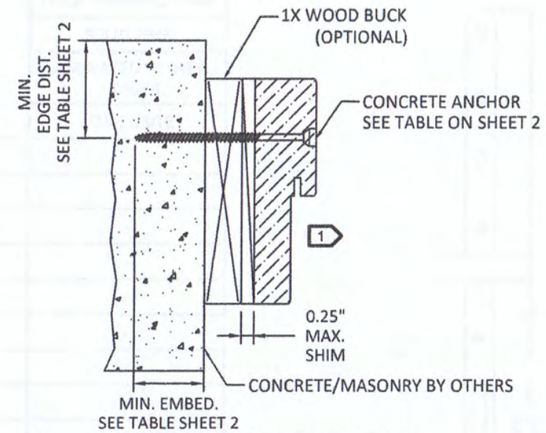

2/8 JAMB (TYPICAL)

OUTSWING SHOWN - INSWING SIMILAR

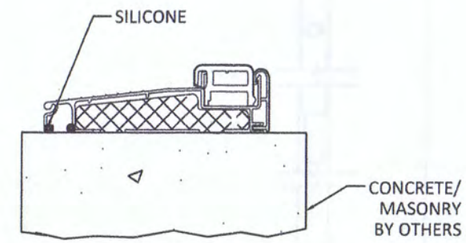

3/8 OPERABLE SILL

INSWING - NO ANCHOR REQUIRED
ENDURA ZAIL4565F

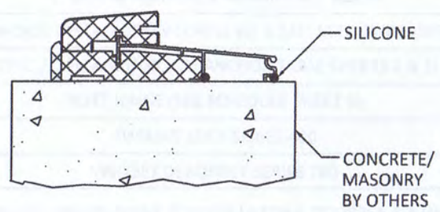

4/8 OPERABLE SILL

OUTSWING - NO ANCHOR REQUIRED
AFCO J-2297

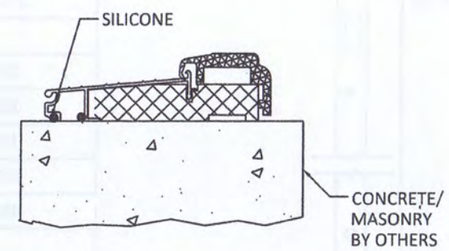

6/8 OPERABLE SILL

INSWING - NO ANCHOR REQUIRED
AFCO A-276/P-2000

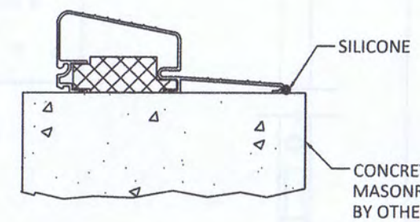

7/8 OPERABLE SILL

OUTSWING - NO ANCHOR REQUIRED
AFCO H-497

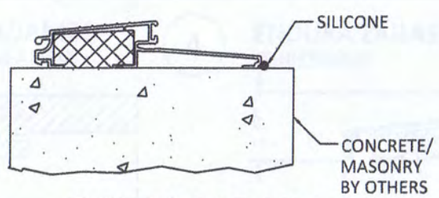

8/8 OPERABLE SILL

OUTSWING - NO ANCHOR REQUIRED
AFCO A-117

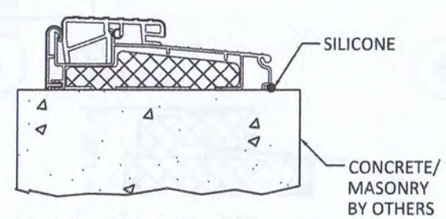

9/8 OPERABLE SILL

OUTSWING - NO ANCHOR REQUIRED
ENDURA ZOBL4565F

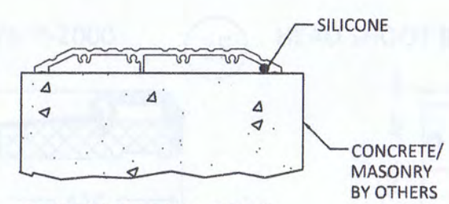

10/8 OPERABLE SILL

OUTSWING/INSWING - NO ANCHOR REQUIRED
ENDURA HCI5000 ADA

1 OPTIONALLY, ANCHOR CAN BE PLACED IN NARROW SECTION OF HEAD OR JAMB AS LONG AS MINIMUM EMBEDMENT AND EDGE DISTANCE ARE ACHIEVED.

PREPARED BY:
BUILDING DROPS, INC.
398 E. DANIA BEACH BLVD., STE. 338
DANIA BEACH, FL 33004
PH: (954)399-8478
FAX: (954)744.4738
WEB: www.buildingdrops.com

TITLE: *DESIGN PRO/SMOOTH PRO FULL LITE NON-IMPACT*

CONCRETE INSTALLATION

JELD-WEN WINDOWS & DOORS
3737 LAKEPORT BLVD.,
KLAMATH FALLS, OR 97601
PH: (541)882-3451
FAX: (541)850-2609

REMARKS	BY	DATE

THIS DOCUMENT IS THE PROPERTY OF BUILDING DROPS, INC. AND SHALL NOT BE REPRODUCED IN WHOLE OR PART WITHOUT WRITTEN CONSENT OF BUILDING DROPS, INC. ALTERATIONS, ADDITIONS, HIGHLIGHTING OR OTHER MARKINGS TO THIS DOCUMENT ARE NOT PERMITTED AND INVALIDATE DUE CERTIFICATION.

STATE OF TEXAS
ALEXIS SPYROU
102957
LICENSED
PROFESSIONAL ENGINEER
97974

ALEXIS SPYROU
TEXAS P.E. NO. 102957
398 DANIA BEACH BLVD. STE. 338
DANIA BEACH, FL 33004
TBPE FIRM NO. 13734

DATE: 07.10.14

DWG. BY: GL | CHK. BY: SS

SCALE: NTS

DWG. #: A010920

SHEET: 8 OF 9

BILL OF MATERIALS		
ITEM#	DESCRIPTION	MATERIAL
1	FRAME HEAD/JAMBS	FINGER-JOINTED PINE
		SOLID PINE
		LAMINATED VENEER LUMBER
		COMPOSITE
2	*(NOT USED)*	-
3	*(NOT USED)*	-
4	ENDURA ZAIL4565F THRESHOLD	-
5	AFCO J-2297 THRESHOLD	-
6	AFCO A-276/P-2000 THRESHOLD	-
7	AFCO H-497 THRESHOLD	-
8	AFCO A-117 THRESHOLD	-
9	ENDURA ZOBL4565F THRESHOLD	-
10	ENDURA HCI5000 ADA THRESHOLD	-
11	WEATHERSTRIP	URETHANE FOAM & POLYETHYLENE
12	NON-COMPRESSION SHIM (0.25" MAX. THK.)	COMPOSITE
13	ODL LIPLITE KIT (RADIUS LITES)	PLASTIC
14	1" O.A. IG TEMPERED NON-IMPACT GLASS	-
15	#10 WOOD INSTALLATION SCREW W/ 1 1/2" MIN. EMBEDMENT	STEEL
16	CONC./CMU ANCHOR (SEE ANCHOR TABLE SHEETS 2 & 3)	STEEL
17	BUTT HINGE (SEE SCHEDULE SHEET 5)	STEEL
18	KWIKSET LOCK SERIES 400	STEEL
19	KWIKSET DEADBOLT SERIES 780	STEEL
20	ROCKWELL MULTI-POINT TONGUE LATCH # 73228768 6-8 UNIT ROCKWELL MULTI-POINT TONGUE LATCH #73228780 8-0 UNIT	STEEL
21	HOPPE MULI-POINT HARDWARE HLS9000	STEEL
22	ODL LIPLITE KIT (NI)	PLASTIC
23	FLUSH GLAZING LEG	FIBERGLASS
24	ODL LIPLITE KIT (VENT LITES)	PLASTIC
25	HOPPE MULI-POINT HEAD SHOOT BOLT PLATE LH #8784091	STEEL
26	HOPPE MULI-POINT HEAD SHOOT BOLT PLATE RH #8783923	STEEL

20 ROCKWELL MULT-POINT LOCK

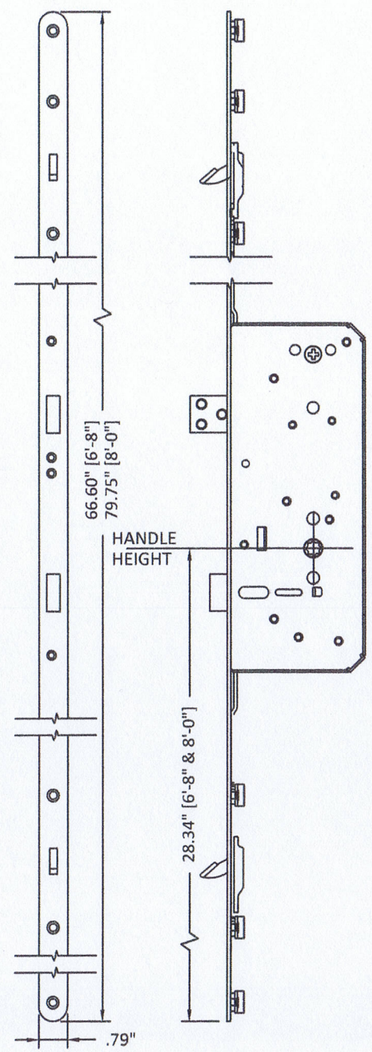

21 HOPPE MULT-POINT LOCK
W/ SILL SHOOT BOLT PLATE #2098911

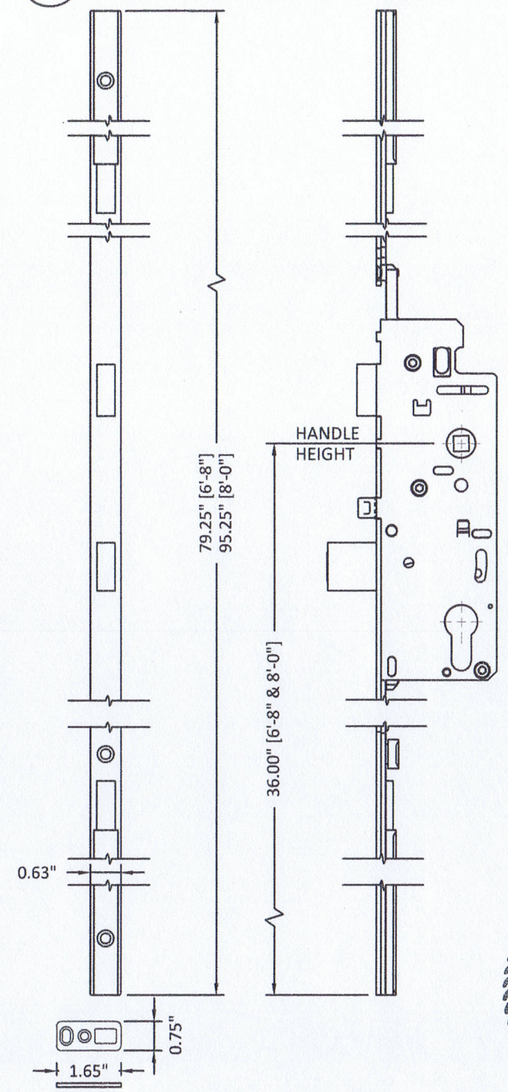

1 FRAME HEAD/JAMBS
VARIES, SEE BOM ABOVE

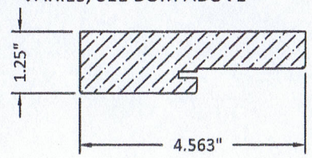

4 ENDURA ZAIL4565F
THRESHOLD

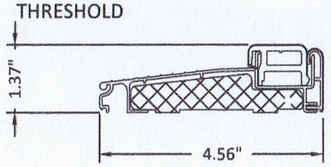

5 AFCO J-2297
THRESHOLD

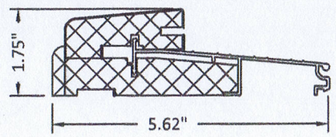

6 AFCO A-276/P-2000
THRESHOLD

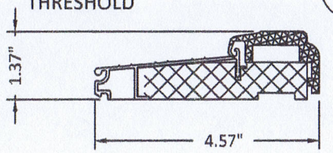

25 HEAD SHOOT BOLT PLATE (LH)

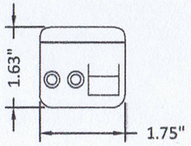

7 AFCO H-497 THRESHOLD

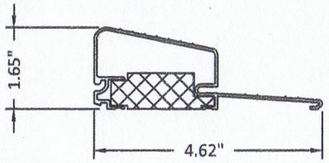

8 AFCO A-117 THRESHOLD

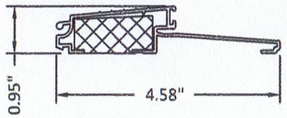

9 ENDURA ZOBL4565F
THRESHOLD

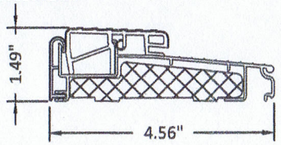

10 ENDURA HCI5000 ADA
THRESHOLD

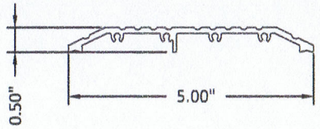

26 HEAD SHOOT BOLT PLATE (RH)

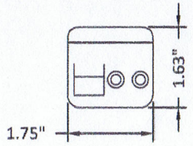

PREPARED BY:

BUILDING DROPS, INC.
398 E. DANIA BEACH BLVD., STE. 338
DANIA BEACH, FL 33004
PH: (954)399-8478
FAX: (954)744.4738
WEB: www.buildingdrops.com

TITLE: *DESIGN PRO/SMOOTH PRO FULL LITE NON-IMPACT*
COMPONENTS AND BILL OF MATERIALS

3737 LAKEPORT BLVD.,
KLAMATH FALLS, OR 97601
PH: (541)882-3451
FAX: (541)850-2609

JELD-WEN WINDOWS & DOORS

REMARKS	BY	DATE

THIS DOCUMENT IS THE PROPERTY OF BUILDING DROPS, INC. AND SHALL NOT BE REPRODUCED IN WHOLE OR PART WITHOUT WRITTEN CONSENT OF BUILDING DROPS, INC. ALTERATIONS, ADDITIONS, HIGHLIGHTING OR OTHER MARKINGS TO THIS DOCUMENT ARE NOT PERMITTED AND INVALIDATE OUR CERTIFICATION.

STATE OF TEXAS
ALEXIS SPYROU
102957
LICENSED
PROFESSIONAL ENGINEER

ALEXIS SPYROU
TEXAS P.E. NO. 102957
398 DANIA BEACH BLVD. STE. 338
DANIA BEACH, FL 33004
TBPE FIRM NO. 13734

DATE: 07.10.14
DWG. BY: GL
CHK. BY: SS
SCALE: NTS
DWG. #: A010920
SHEET: 9 OF 9