Trinity Glass INTERNATIONAL
4621 192nd STREET EAST TACOMA, WA 98446

GLAZED FIBERGLASS DOUBLE DOOR
w/ or w/out SIDELITES

OUTSWING
"IMPACT"

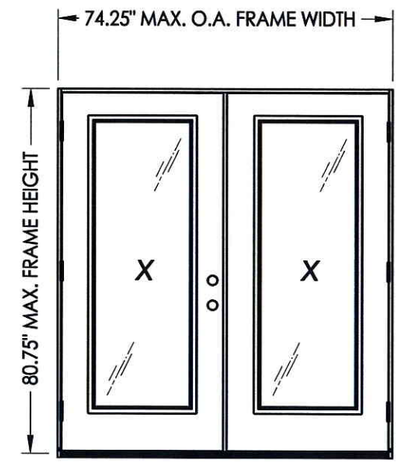

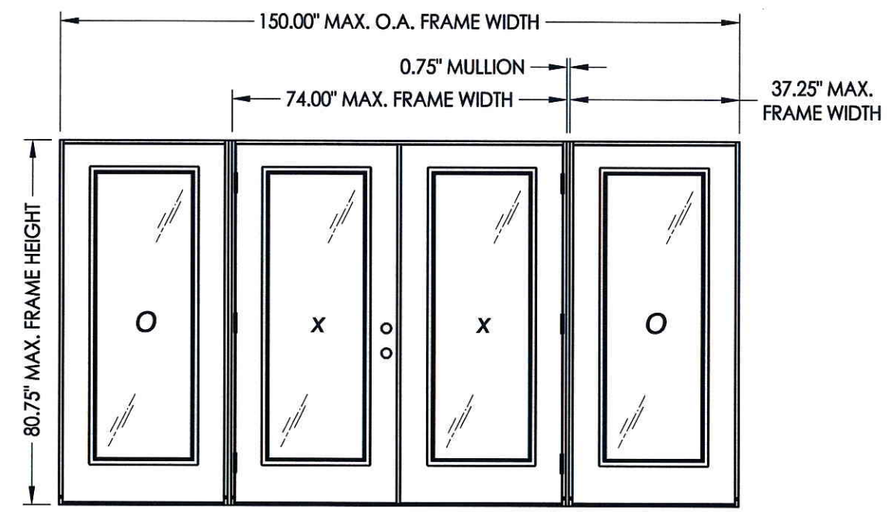

EVALUATED FOR USE IN THE STATE OF TEXAS

The Trinity Fiberglass Door described herein complies with the 2006 International Residential Code (IRC), Sections R301 & R613 and the 2006 International Building Code (IBC), Sections 1405.12, 1609, 1714.5, 2403 and 2404 (including Texas revisions) subject to the following conditions:

1. Anchors shall be as listed and spaced as shown in the details. Anchor embedment to base material shall be beyond wall dressing or stucco.
2. This system has been tested and evaluated as a large missile impact protective system for installation in the Seaward, Inland I and Inland II areas. This product meets missile level "D" as defined in ASTM E 1996.
3. Allowable design pressure requirements must be equal to or less than the design pressure rating shown in the design pressure chart, sheet 1 of this drawing.
4. Conditions not covered by this drawing are subject to further engineering analysis.

TABLE OF CONTENTS

SHEET#	DESCRIPTION
1	Typical elevations, design pressures & general notes
2	Door panel details (Rectangular Lite)
3	Door panel details (Oval Lite)
4	Sidelite panel details and glazing details
5	Elevations
6	Horizontal cross sections
7	Vertical cross sections
8	Vertical cross sections
9	Frame anchoring (XX)
10	Frame anchoring (OXXO)
11	Components
12	Astragal details
13	Bill of materials

CONFIGURATION	MAX. FRAME DIMENSION	DESIGN PRESSURE (PSF) ALUMINUM ASTRAGAL		DESIGN PRESSURE (PSF) PVC ASTRAGAL	
		POSITIVE	NEGATIVE	POSITIVE	NEGATIVE
XX	74.25" x 80.75"	+ 55.0	- 55.0	+ 47.0	- 47.0
OXXO	150.0" x 80.75"	+ 55.0	- 55.0	+ 47.0	- 47.0

STATE OF TEXAS
LYNDON F. SCHMIDT
104123
LICENSED
PROFESSIONAL ENGINEER
5-10-12

Documents Prepared By: Lyndon F. Schmidt, P.E.
TEXAS P.E. #104123
RW BUILDING CONSULTANTS, INC.
P.O. Box 230 Valrico FL. 33595
Phone No.: 813.659.9197
TEXAS BOARD OF PROFESSIONAL ENGINEERS
CERTIFICATE OF REGISTRATION # F-11852

PRODUCT: TRINITY GLASS INT'L
PART OR ASSEMBLY: TYPICAL ELEVATION, DESIGN PRESSURES & GENERAL NOTES

REVISIONS

NO.	DATE	BY

DATE: 5/10/12
SCALE: N.T.S.
DWG. BY: JK
CHK. BY: LFS
DRAWING NO.: TX-4157
SHEET 1 OF 13

© 2012 R.W. BUILDING CONSULTANTS INC.

R:\A - Projects\Project Folders\Proj 1001-1100\pf1089\D. RWBC Drawings\TEXAS 2012\TX-4154-57.dwg, TX-4157

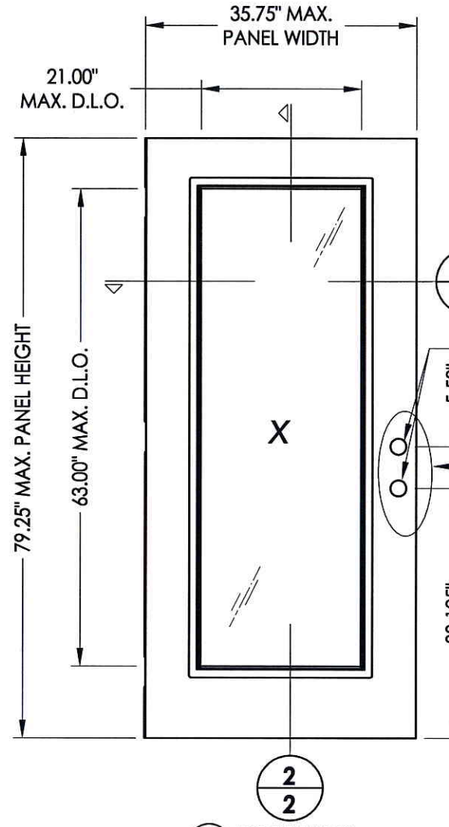

40 **DOOR PANEL**
Full lite

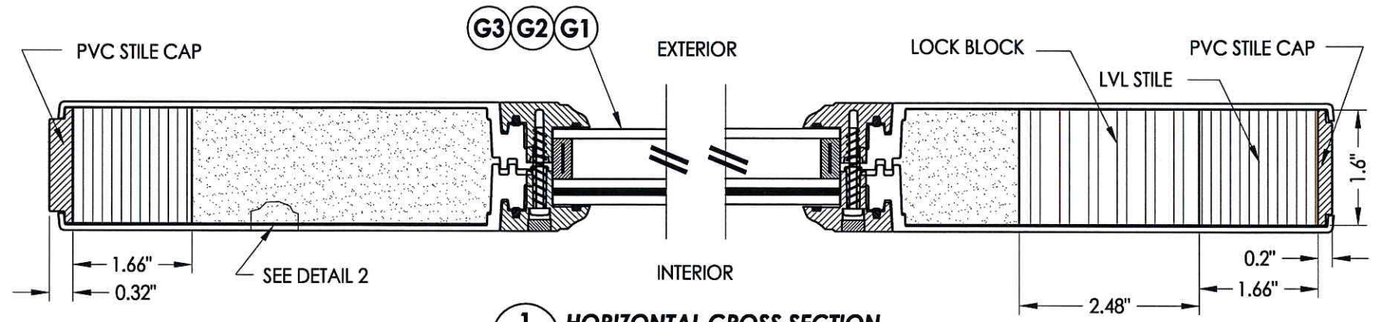

1/2 **HORIZONTAL CROSS SECTION**

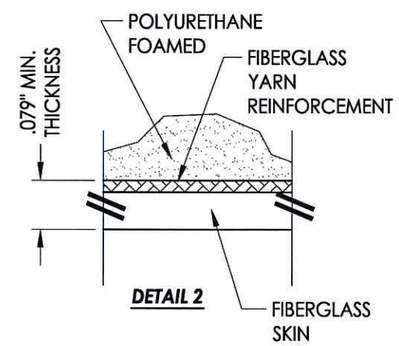

DETAIL 2

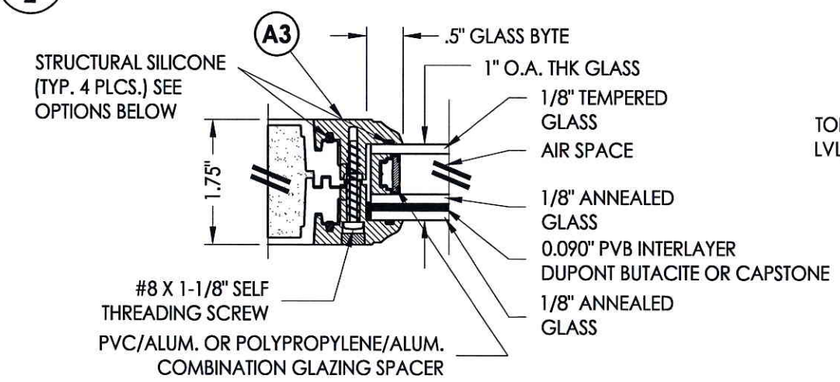

G2 **GLAZING DETAIL**

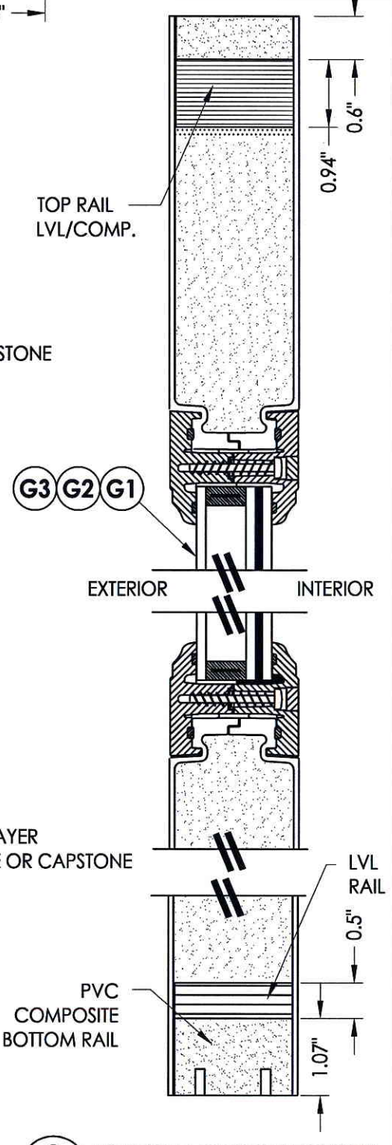

2/2 **VERTICAL CROSS SECTION**

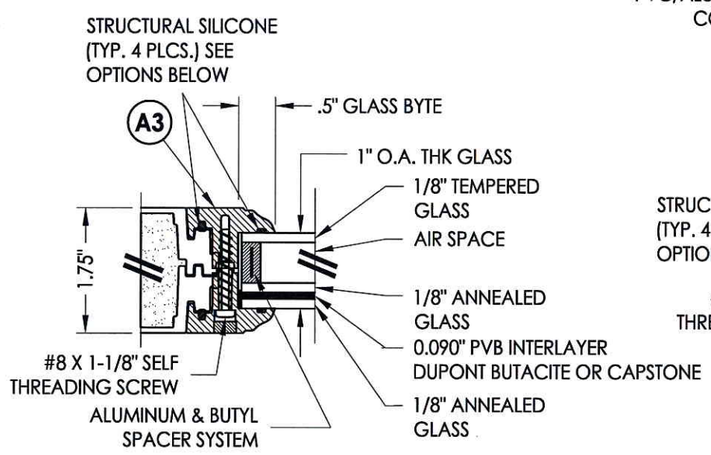

G1 **GLAZING DETAIL**

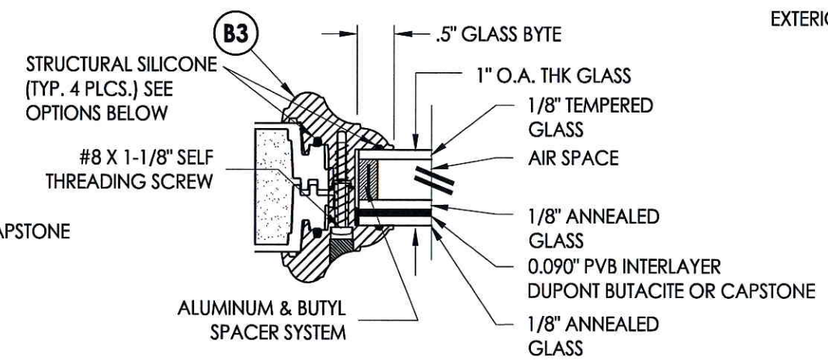

G3 **GLAZING DETAIL**

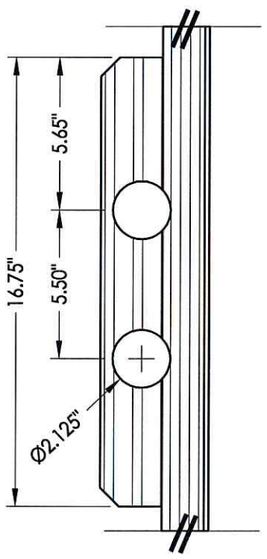

DETAIL 1

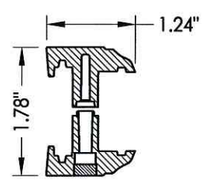

A3 **FLUSH GLAZED FRAME**
ABS or PC/ASA

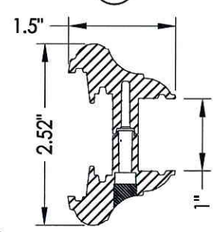

B3 **MAHOGANY LITE FRAME**
ABS or PC/ASA

LITE FRAME SCREW SPACING:
At each corner plus 6 more along sides (11" max. o.c.) & 2 more along top & bottom (8" max. o.c.).

HARDWARE CHART	
MANUFACTURER	MODEL
KWIKSET	KNOB: SIGNATURE SERIES DEADBOLT: SIGNATURE SERIES (980)

STRUCTURAL SILICONE OPTIONS:
SILICONE BY CAPSTONE (4PL)
DOW 995 STRUCTURAL SILICONE
SILICONE BY DONGYANG SILICONE CO.

STATE OF TEXAS
LYNDON F. SCHMIDT
104123
LICENSED PROFESSIONAL ENGINEER

Documents Prepared By: Lyndon F. Schmidt, P.E.
TEXAS P.E. #104123
RW BUILDING CONSULTANTS, INC.
P.O. Box 230 Valrico FL. 33595
Phone No.: 813.659.9197
TEXAS BOARD OF PROFESSIONAL ENGINEERS
CERTIFICATE OF REGISTRATION # F-11852

PRODUCT: TRINITY GLASS INT'L
PART OR ASSEMBLY: DOOR PANEL DETAILS

NO.	DATE	REVISIONS	BY

DATE: 5/10/12
SCALE: N.T.S.
DWG. BY: JK
CHK. BY: LFS
DRAWING NO.: TX-4157
SHEET 2 OF 13

© 2012 R.W. BUILDING CONSULTANTS INC.

R:\A - Projects\Project Folders\Proj 1001-1100\pf1089\D. RWBC Drawings\TEXAS 2012\TX-4154-57.dwg, 2.4

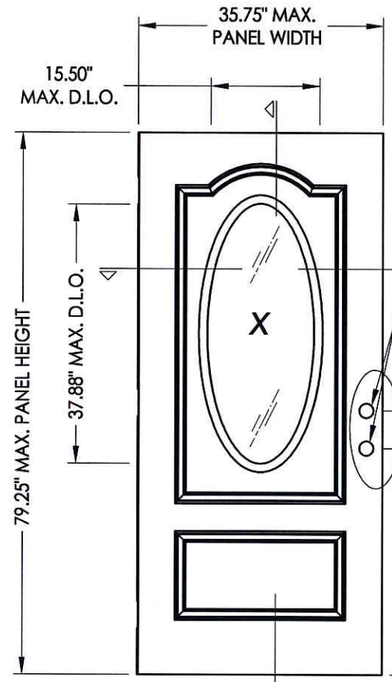

2/3 **41 DOOR PANEL** Oval lite

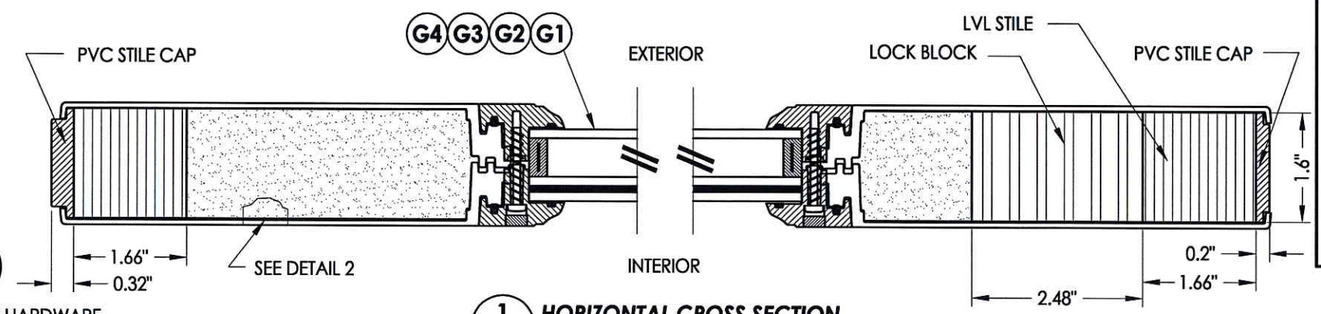

1/3 **HORIZONTAL CROSS SECTION**

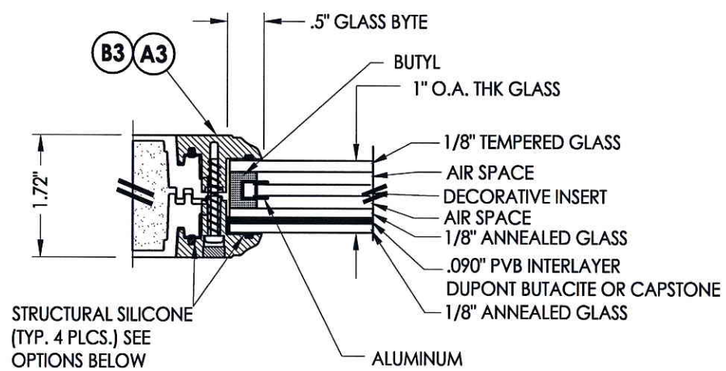

G4 GLAZING DETAIL

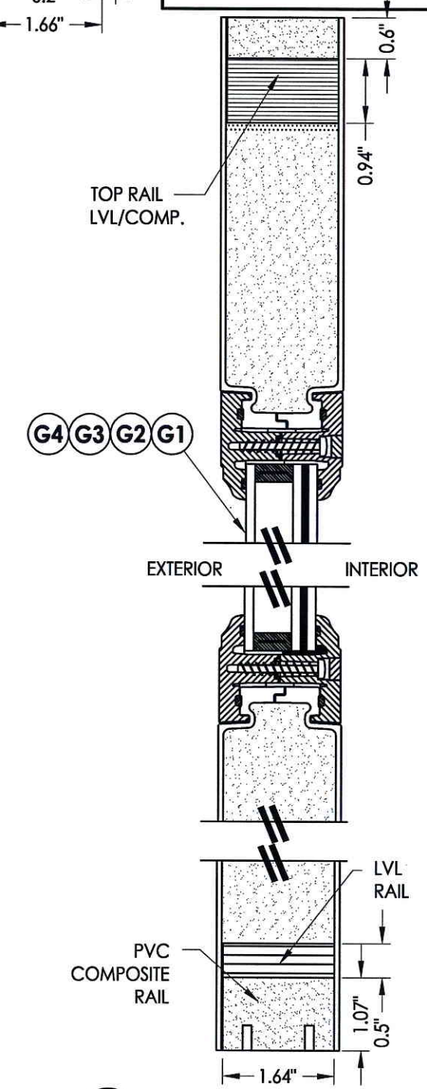

2/3 **VERTICAL CROSS SECTION**

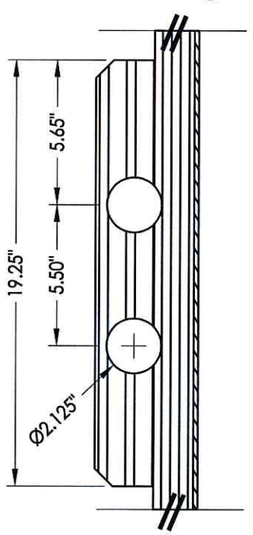

DETAIL 1

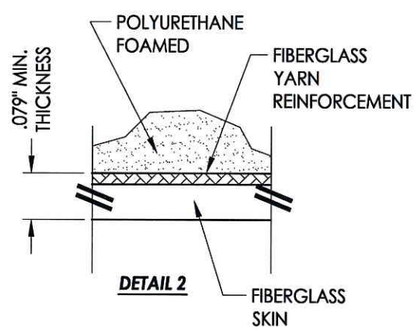

DETAIL 2

HARDWARE CHART	
MANUFACTURER	MODEL
KWIKSET	KNOB: SIGNATURE SERIES DEADBOLT: SIGNATURE SERIES (980)

LITE FRAME SCREW SPACING:
At each corner plus 6 more along sides (11" max. o.c.) & 2 more along top & bottom (8" max. o.c.).

STRUCTURAL SILICONE OPTIONS:
SILICONE BY CAPSTONE (4PL)
DOW 995 STRUCTURAL SILICONE
SILICONE BY DONGYANG SILICONE CO.

Documents Prepared By: Lyndon F. Schmidt, P.E.
TEXAS P.E. #104123
RW BUILDING CONSULTANTS, INC.
P.O. Box 230 Valrico FL. 33595
Phone No.: 813.659.9197
TEXAS BOARD OF PROFESSIONAL ENGINEERS
CERTIFICATE OF REGISTRATION # F-11852

STATE OF TEXAS — LYNDON F. SCHMIDT — 104123 — LICENSED PROFESSIONAL ENGINEER

PRODUCT: TRINITY GLASS INT'L

PART OR ASSEMBLY: DOOR PANEL DETAILS AND GLAZING DETAILS

NO.	DATE	REVISIONS	BY

DATE: 5/10/12
SCALE: N.T.S.
DWG. BY: JK
CHK. BY: LFS
DRAWING NO.: TX-4157
SHEET 3 OF 13

© 2012 R.W. BUILDING CONSULTANTS INC.

R:\A - Projects\Project Folders\Proj 1001-1100\pf1089\D. RWBC Drawings\TEXAS 2012\TX-4154-57.dwg, 3.4

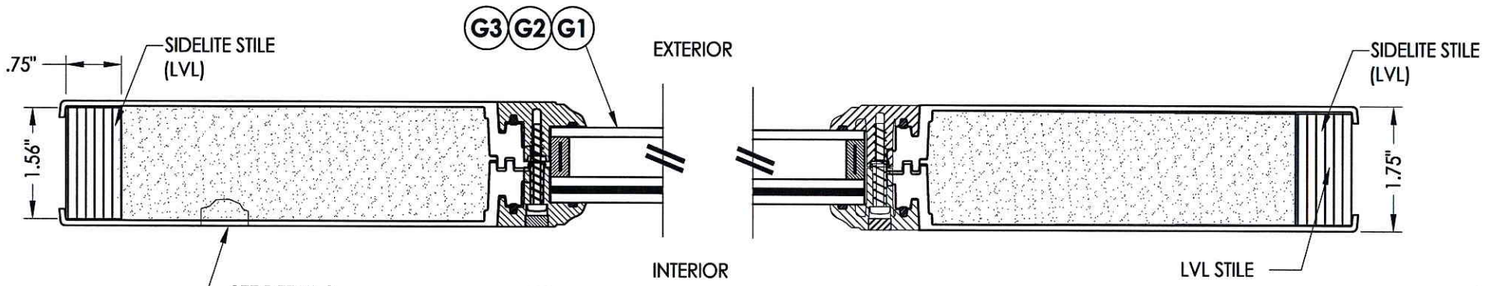

1/4 **HORIZONTAL CROSS SECTION**

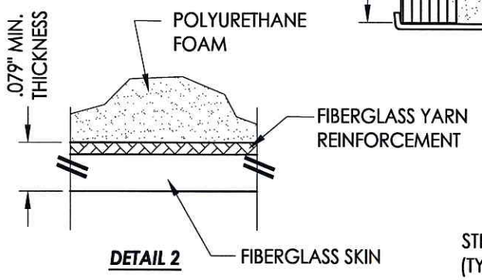

DETAIL 2

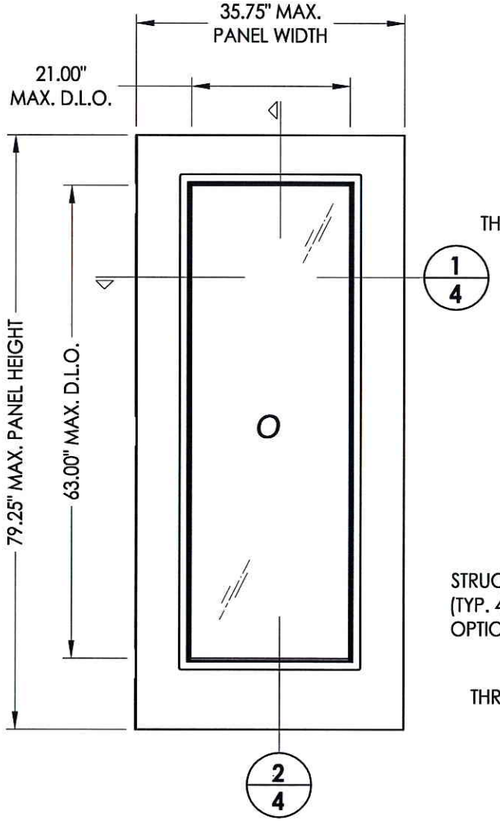

60 **SIDELITE**

DOOR SKIN: 0.079" MIN. THK. FIBERGLASS
CORE MATERIAL: POLYURETHANE FOAM

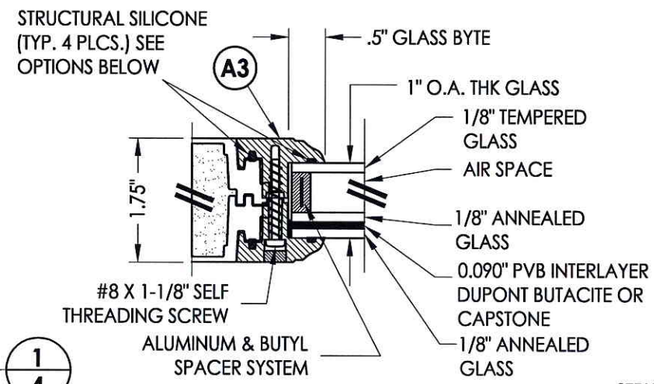

G1 **GLAZING DETAIL**

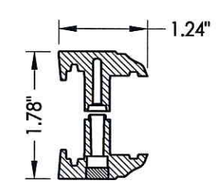

A3 **FLUSH GLAZED FRAME**
ABS or PC/ASA

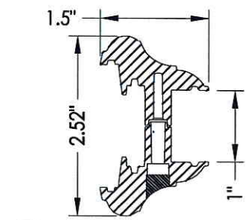

B3 **MAHOGANY LITE FRAME**
ABS or PC/ASA

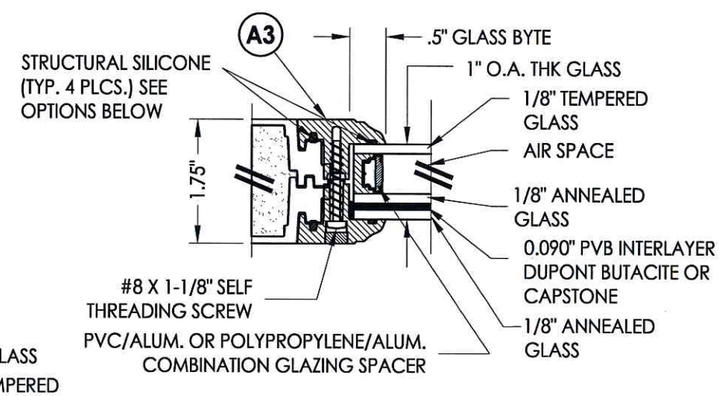

G2 **GLAZING DETAIL**

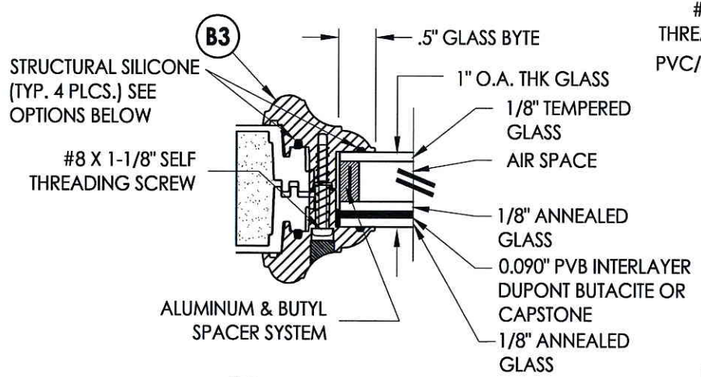

G3 **GLAZING DETAIL**

STRUCTURAL SILICONE OPTIONS:
SILICONE BY CAPSTONE (4PL)
DOW 995 STRUCTURAL SILICONE
SILICONE BY DONGYANG SILICONE CO.

LITE FRAME SCREW SPACING:
At each corner plus 6 more along sides (11" max. o.c.) & 2 more along top & bottom (8" max. o.c.).

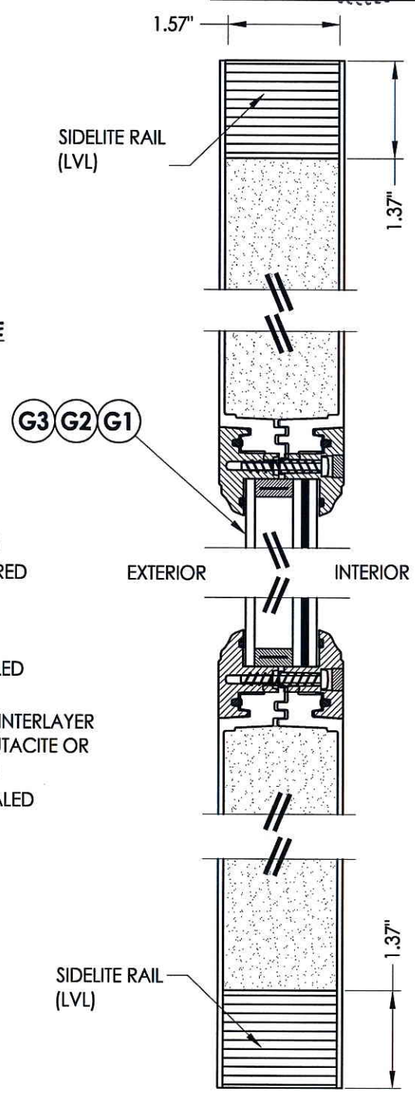

2/4 **VERTICAL CROSS SECTION**

STATE OF TEXAS
LYNDON F. SCHMIDT
104123
LICENSED PROFESSIONAL ENGINEER

Documents Prepared By: Lyndon F. Schmidt, P.E.
TEXAS P.E. #104123
RW BUILDING CONSULTANTS, INC.
P.O. Box 230 Valrico FL. 33595
Phone No.: 813.659.9197
TEXAS BOARD OF PROFESSIONAL ENGINEERS
CERTIFICATE OF REGISTRATION # F-11852

PRODUCT: TRINITY GLASS INT'L
PART OR ASSEMBLY: SIDELITE PANEL DETAILS AND GLAZING DETAILS

NO.	DATE	REVISIONS	BY

DATE: 5/10/12
SCALE: N.T.S.
DWG. BY: JK
CHK. BY: LFS
DRAWING NO.: TX-4157
SHEET 4 OF 13

© 2012 R.W. BUILDING CONSULTANTS INC.

R:\A - Projects\Project Folders\Proj 1001-1100\pf1089\D. RWBC Drawings\TEXAS 2012\TX-4154-57.dwg, 4.4

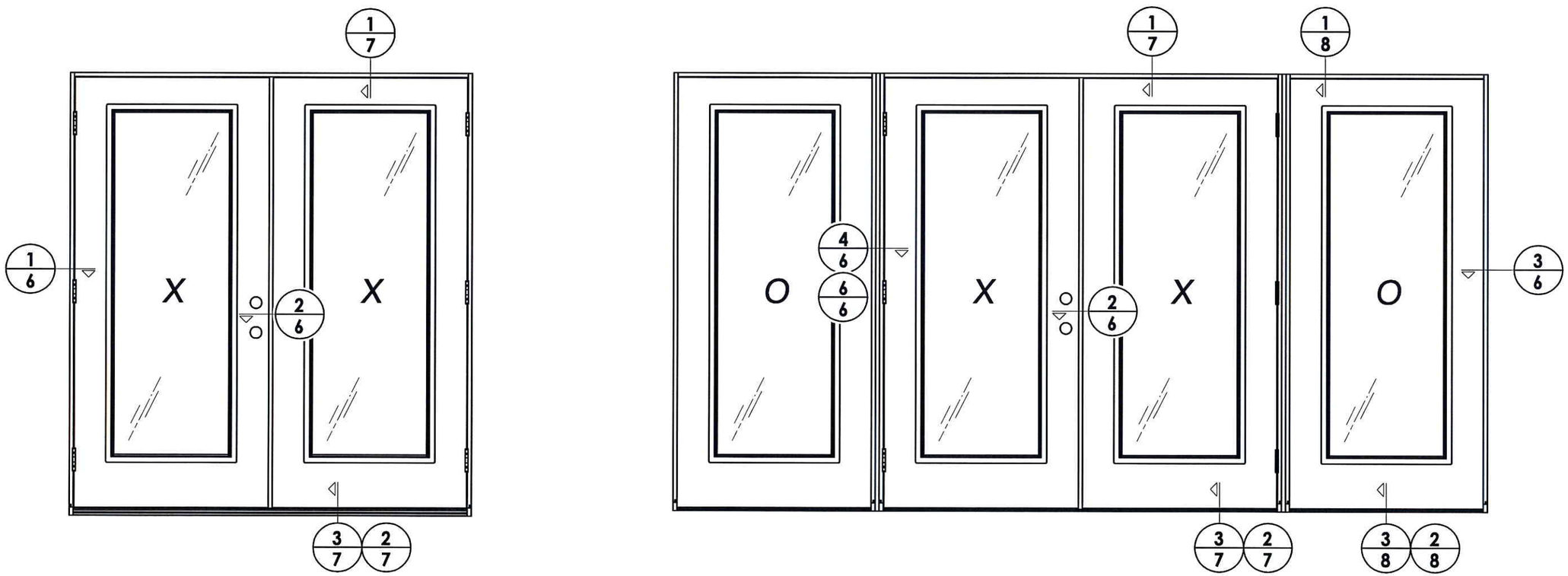

STATE OF TEXAS
LYNDON F. SCHMIDT
104123
LICENSED PROFESSIONAL ENGINEER

Documents Prepared By: Lyndon F. Schmidt, P.E.
TEXAS P.E. #104123

RW BUILDING CONSULTANTS, INC.
P.O. Box 230 Valrico FL 33595
Phone No.: 813.659.9197

TEXAS BOARD OF PROFESSIONAL ENGINEERS
CERTIFICATE OF REGISTRATION # F-11852

PRODUCT: TRINITY GLASS INT'L

PART OR ASSEMBLY: ELEVATIONS

NO.	DATE	BY

REVISIONS

DATE: 5/10/12
SCALE: N.T.S.
DWG. BY: JK
CHK. BY: LFS
DRAWING NO.: TX-4157
SHEET 5 OF 13

© 2012 R.W. BUILDING CONSULTANTS INC.

R:\A - Projects\Project Folders\Proj 1001-1100\pf1089\D. RWBC Drawings\TEXAS 2012\TX-4154-57.dwg, 5.4

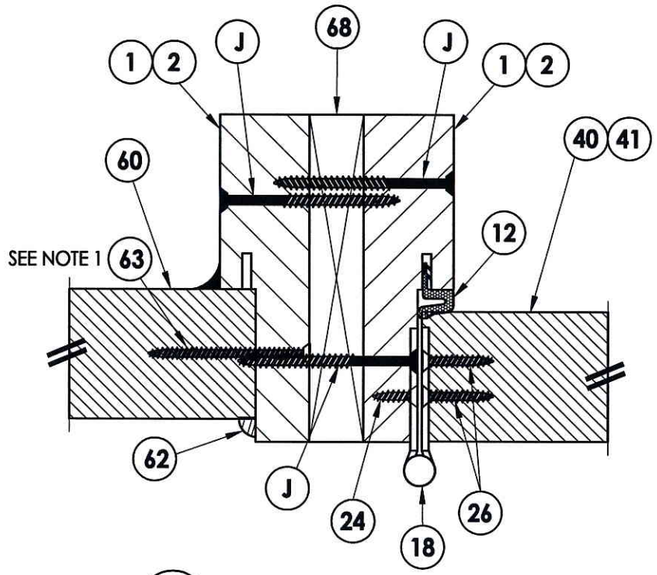

INTERIOR

EXTERIOR

4/6 HORIZONTAL CROSS SECTION
w/ 1X mullion

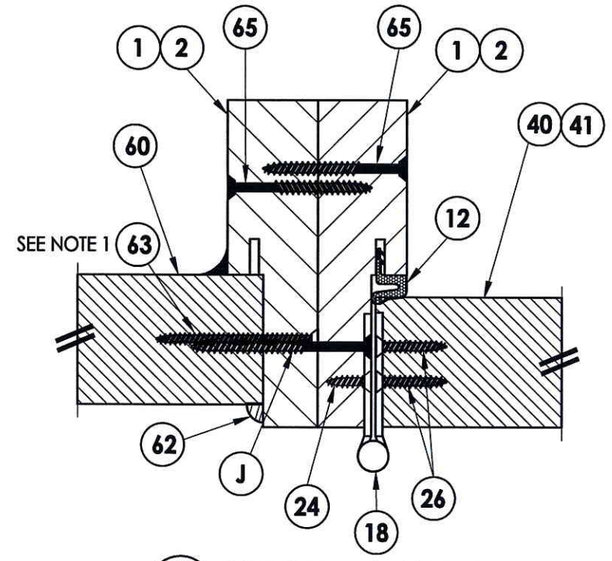

6/6 HORIZONTAL CROSS SECTION

NOTE:

1. Item #63 located 6" from each end and 3 more equally spaced (5 total).
2. PVC frame may be used with double door without sidelites only.

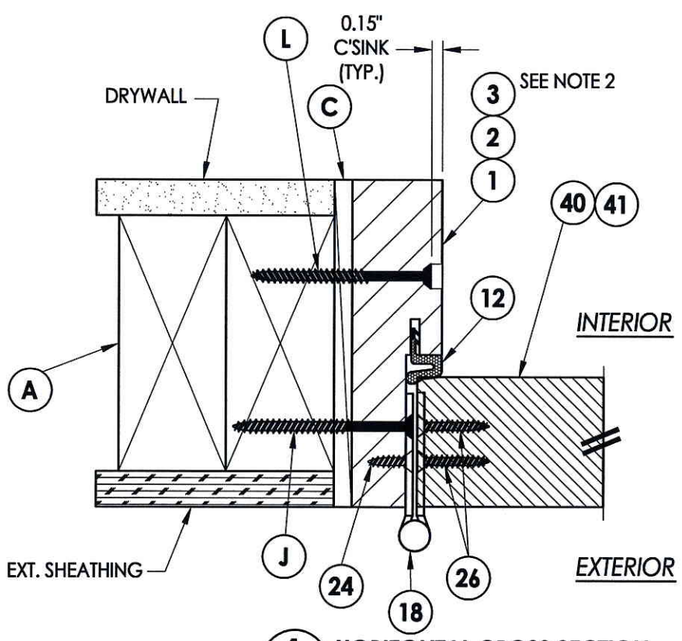

1/6 HORIZONTAL CROSS SECTION

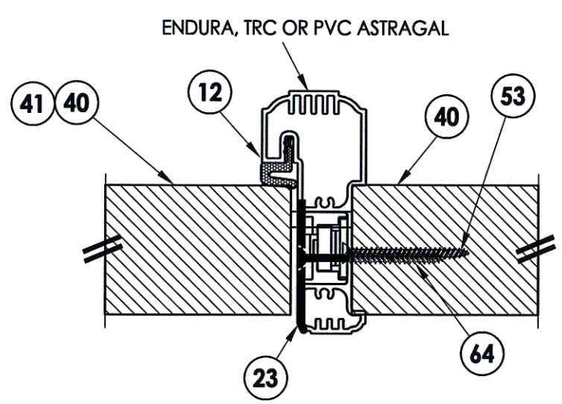

2/6 HORIZONTAL CROSS SECTION

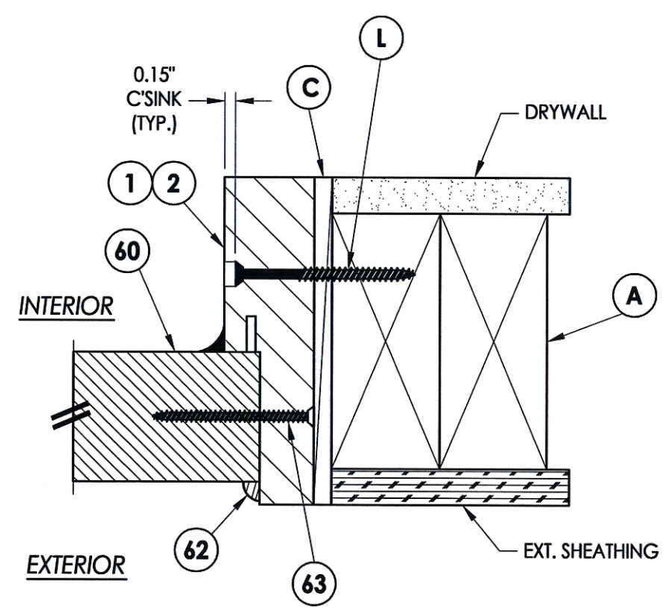

3/6 HORIZONTAL CROSS SECTION

STATE OF TEXAS
LYNDON F. SCHMIDT
104123
LICENSED
PROFESSIONAL ENGINEER
6-4-12

Documents Prepared By: Lyndon F. Schmidt, P.E.
TEXAS P.E. #104123

RW BUILDING CONSULTANTS, INC.
P.O. Box 230 Valrico FL 33595
Phone No.: 813.659.9197

TEXAS BOARD OF PROFESSIONAL ENGINEERS
CERTIFICATE OF REGISTRATION # F-11852

PRODUCT: TRINITY GLASS INT'L

PART OR ASSEMBLY: HORIZONTAL CROSS SECTIONS

NO.	DATE	REVISIONS	BY

DATE: 5/10/12
SCALE: N.T.S.
DWG. BY: JK
CHK. BY: LFS
DRAWING NO.: TX-4157
SHEET 6 OF 13

© 2012 R.W. BUILDING CONSULTANTS INC.

R:\A - Projects\Project Folders\Proj 1001-1100\pf1089\D. RWBC Drawings\TEXAS 2012\TX-4154-57.dwg, 6.4

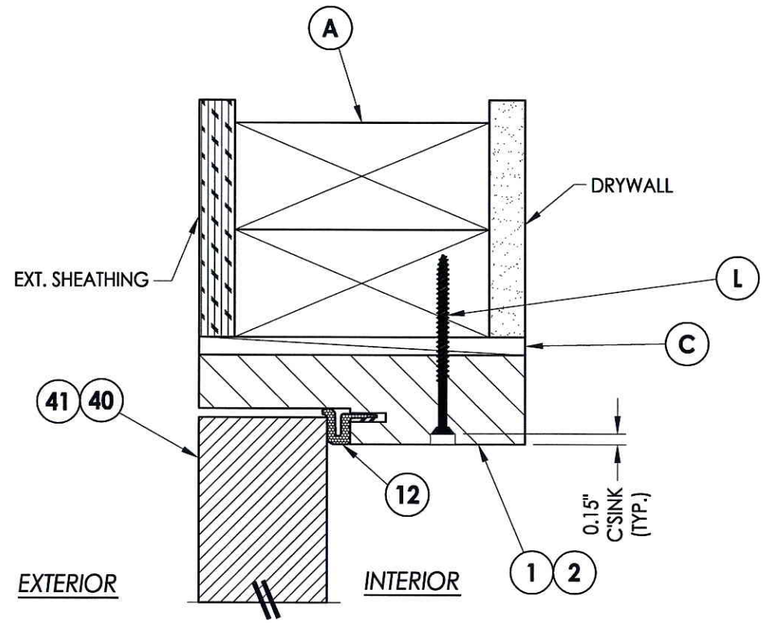

1/7 **VERTICAL CROSS SECTION**

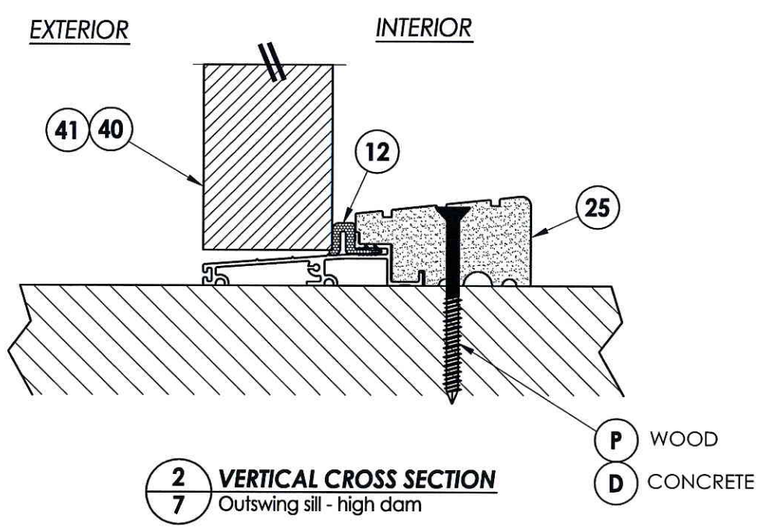

2/7 **VERTICAL CROSS SECTION**
Outswing sill - high dam

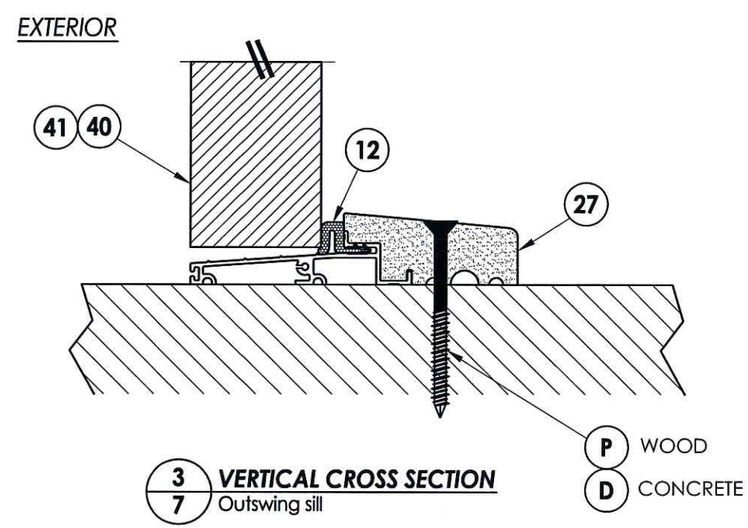

3/7 **VERTICAL CROSS SECTION**
Outswing sill

STATE OF TEXAS
LYNDON F. SCHMIDT
104123
LICENSED PROFESSIONAL ENGINEER
6-12

Documents Prepared By: Lyndon F. Schmidt, P.E.
TEXAS P.E. #104123

RW BUILDING CONSULTANTS, INC.
P.O. Box 230 Valrico FL. 33595
Phone No.: 813.659.9197

TEXAS BOARD OF PROFESSIONAL ENGINEERS
CERTIFICATE OF REGISTRATION # F-11852

PRODUCT: TRINITY GLASS INT'L

PART OR ASSEMBLY: VERTICAL CROSS SECTIONS

REVISIONS

NO.	DATE	BY

DATE: 5/10/12
SCALE: N.T.S.
DWG. BY: JK
CHK. BY: LFS
DRAWING NO.: TX-4157
SHEET 7 OF 13

© 2012 R.W. BUILDING CONSULTANTS INC.

R:\A - Projects\Project Folders\Proj 1001-1100\pf1089\D. RWBC Drawings\TEXAS 2012\TX-4154-57.dwg, 7.4

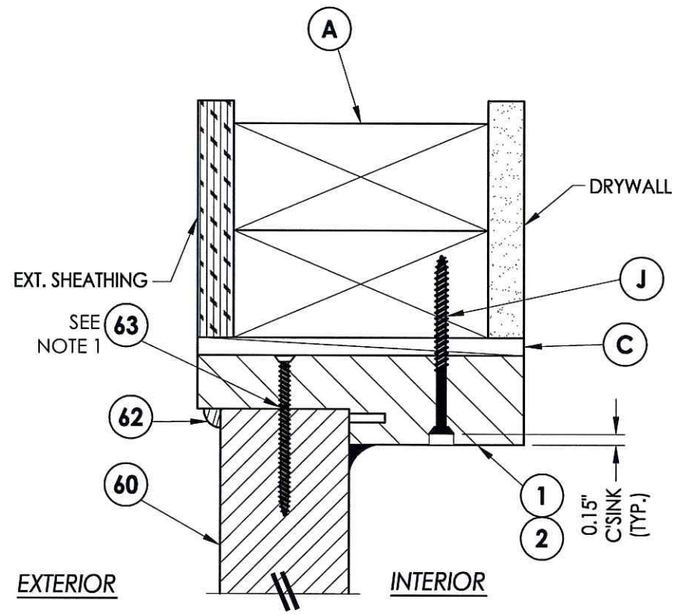

1/8 VERTICAL CROSS SECTION

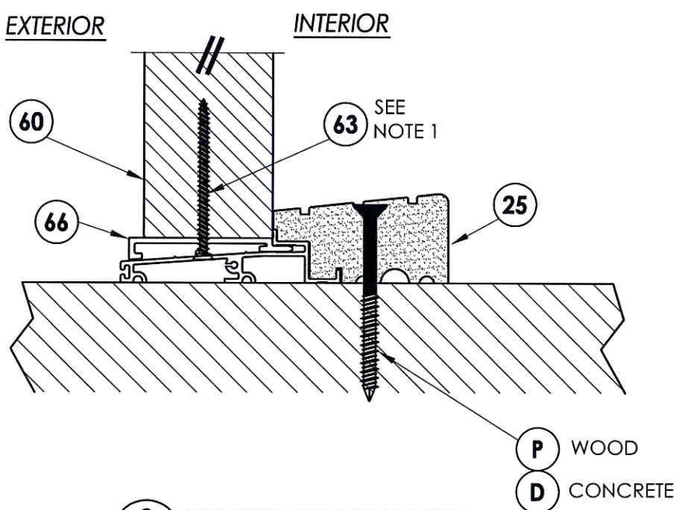

2/8 VERTICAL CROSS SECTION

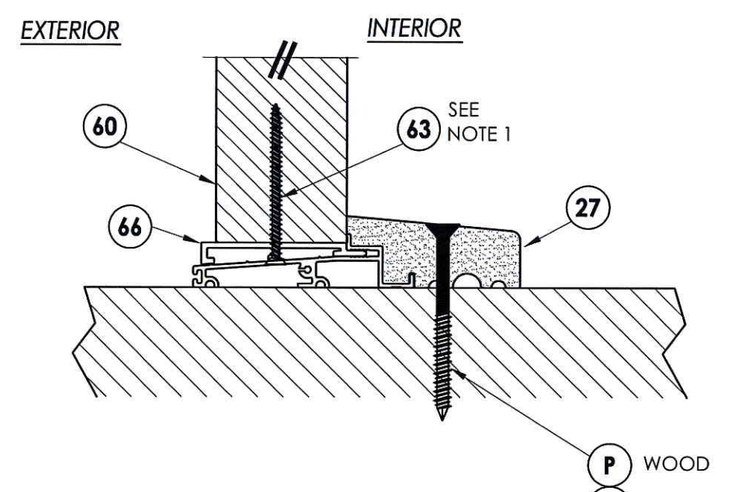

3/8 VERTICAL CROSS SECTION

NOTE:

1. Screws thru head and sill jamb located 3" from each end and on center line.

STATE OF TEXAS
LYNDON F. SCHMIDT
104123
LICENSED PROFESSIONAL ENGINEER
6-4-12

Documents Prepared By: Lyndon F. Schmidt, P.E. TEXAS P.E. #104123

RW BUILDING CONSULTANTS, INC.
P.O. Box 230 Valrico FL. 33595
Phone No.: 813.659.9197

TEXAS BOARD OF PROFESSIONAL ENGINEERS CERTIFICATE OF REGISTRATION # F-11852

PRODUCT: TRINITY GLASS INT'L

PART OR ASSEMBLY: VERTICAL CROSS SECTIONS

NO.	DATE	BY

REVISIONS

DATE: 5/10/12
SCALE: N.T.S.
DWG. BY: JK
CHK. BY: LFS
DRAWING NO.: TX-4157
SHEET 8 OF 13

© 2012 R.W. BUILDING CONSULTANTS INC.

R:\A - Projects\Project Folders\Proj 1001-1100\pf1089\D. RWBC Drawings\TEXAS 2012\TX-4154-57.dwg, 8.4

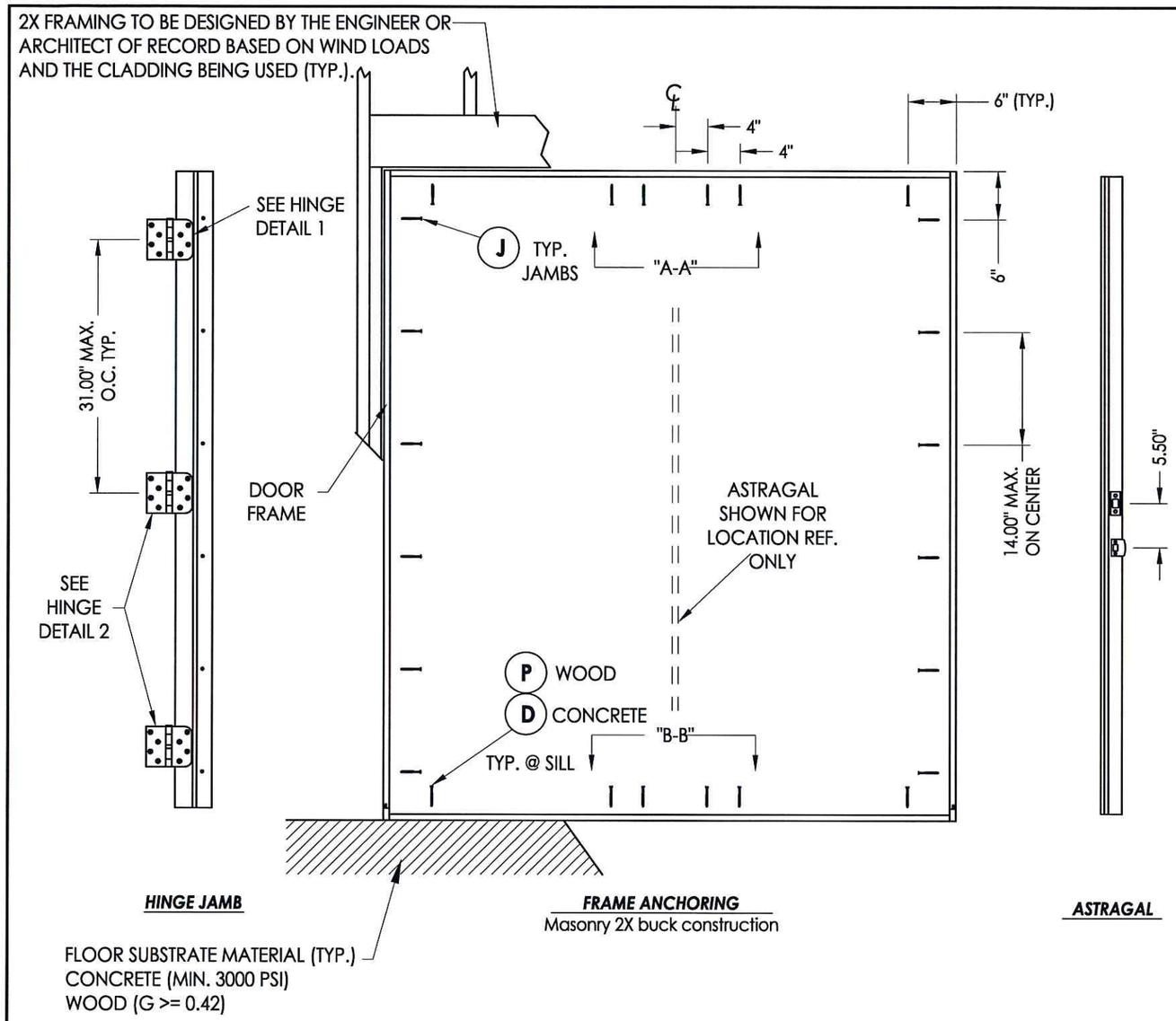

HINGE JAMB

FRAME ANCHORING
Masonry 2X buck construction

ASTRAGAL

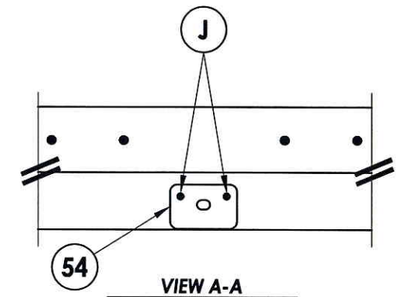

VIEW A-A
Astragal strike @ head

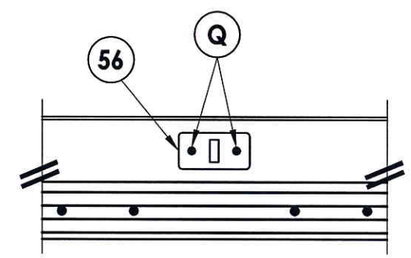

VIEW B-B
Astragal strike @ sill

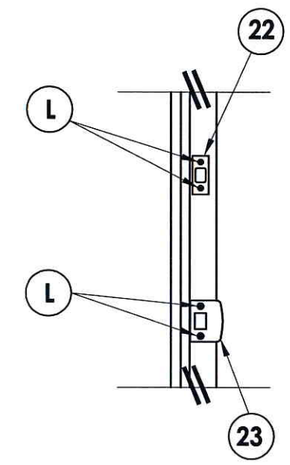

STRIKE PLATE DETAIL
Astragal

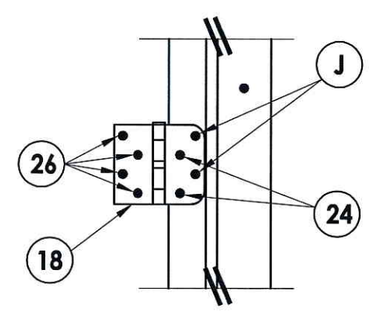

HINGE DETAIL 1

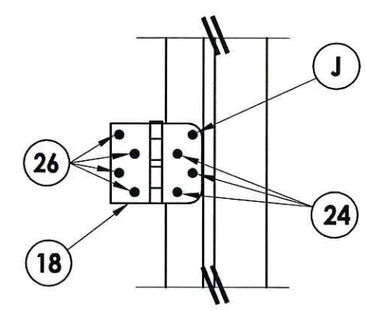

HINGE DETAIL 2

CONCRETE ANCHOR NOTES:

1. *Substitution of equal concrete anchors from a different supplier may have different edge distance and center distance requirements.*
2. *Concrete anchor locations at the corners may be adjusted to maintain the min. edge distance to mortar joints. If concrete anchor locations noted as "MAX. ON CENTER" must be adjusted to maintain the min. edge distance to mortar joints, additional concrete anchors may be required to ensure the "MAX. ON CENTER" dimensions are not exceeded.*
3. *Concrete anchor table:*

ANCHOR TYPE	ANCHOR SIZE	MIN. EMBEDMENT	MIN. CLEARANCE TO MASONRY EDGE	MIN. CLEARANCE TO ADJACENT ANCHOR
ITW	1/4"	1-1/4"	2-1/2"	3"
ITW	3/16"	1-1/4"	2-5/8"	1-1/8"
ELCO	1/4"	1-1/4"	1"	4"

STATE OF TEXAS
LYNDON F. SCHMIDT
104123
LICENSED PROFESSIONAL ENGINEER
6-4-12

Documents Prepared By: Lyndon F. Schmidt, P.E.
TEXAS P.E. #104123
RW BUILDING CONSULTANTS, INC.
P.O. Box 230 Valrico FL. 33595
Phone No.: 813.659.9197
TEXAS BOARD OF PROFESSIONAL ENGINEERS
CERTIFICATE OF REGISTRATION # F-11852

PRODUCT: TRINITY GLASS INT'L

PART OR ASSEMBLY: FRAME ANCHORING (XX)

NO.	DATE	BY

REVISIONS

DATE: 5/10/12
SCALE: N.T.S.
DWG. BY: JK
CHK. BY: LFS
DRAWING NO.: TX-4157
SHEET 9 OF 13

© 2012 R.W. BUILDING CONSULTANTS INC.

R:\A - Projects\Project Folders\Proj 1001-1100\pf1089\D. RWBC Drawings\TEXAS 2012\TX-4154-57.dwg, 9.4

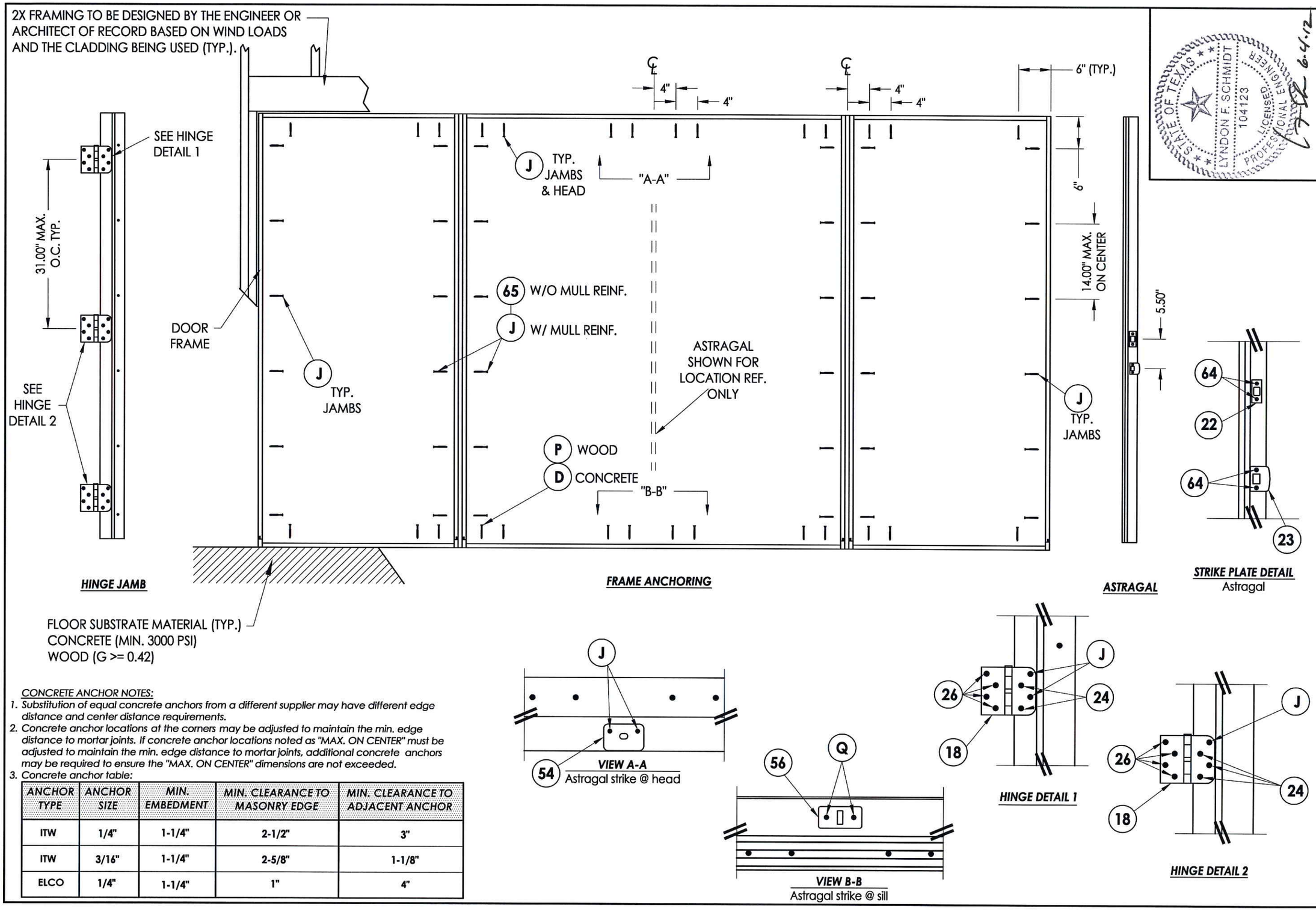

CONCRETE ANCHOR NOTES:

1. *Substitution of equal concrete anchors from a different supplier may have different edge distance and center distance requirements.*
2. *Concrete anchor locations at the corners may be adjusted to maintain the min. edge distance to mortar joints. If concrete anchor locations noted as "MAX. ON CENTER" must be adjusted to maintain the min. edge distance to mortar joints, additional concrete anchors may be required to ensure the "MAX. ON CENTER" dimensions are not exceeded.*
3. *Concrete anchor table:*

ANCHOR TYPE	ANCHOR SIZE	MIN. EMBEDMENT	MIN. CLEARANCE TO MASONRY EDGE	MIN. CLEARANCE TO ADJACENT ANCHOR
ITW	1/4"	1-1/4"	2-1/2"	3"
ITW	3/16"	1-1/4"	2-5/8"	1-1/8"
ELCO	1/4"	1-1/4"	1"	4"

STATE OF TEXAS
LYNDON F. SCHMIDT
104123
LICENSED PROFESSIONAL ENGINEER
6-4-12

Documents Prepared By: Lyndon F. Schmidt, P.E.
TEXAS P.E. #104123

RW BUILDING CONSULTANTS, INC.
P.O. Box 230 Valrico FL. 33595
Phone No.: 813.659.9197

TEXAS BOARD OF PROFESSIONAL ENGINEERS
CERTIFICATE OF REGISTRATION # F-11852

PRODUCT: *TRINITY GLASS INT'L*

PART OR ASSEMBLY: *FRAME ANCHORING (OXXO)*

NO.	DATE	BY

REVISIONS

DATE: 5/10/12
SCALE: N.T.S.
DWG. BY: JK
CHK. BY: LFS
DRAWING NO.: TX-4157
SHEET 10 OF 13

© 2012 R.W. BUILDING CONSULTANTS INC.

R:\A - Projects\Project Folders\Proj 1001-1100\pf1089\D. RWBC Drawings\TEXAS 2012\TX-4154-57.dwg, 10.4

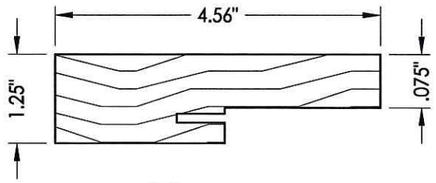

1 **SIDE & HEAD JAMBS**

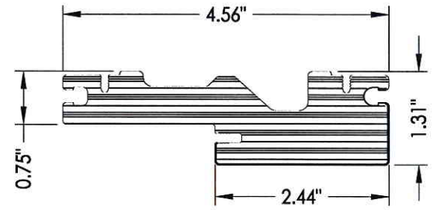

3 **HEAD AND JAMBS**
PVC

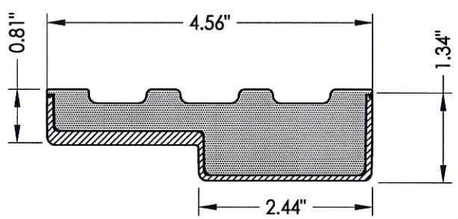

2 **HEAD AND JAMBS**
Composite PVC Base
w/ Fiberglass Wrap

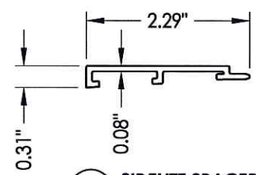

66 **SIDELITE SPACER**
Outswing

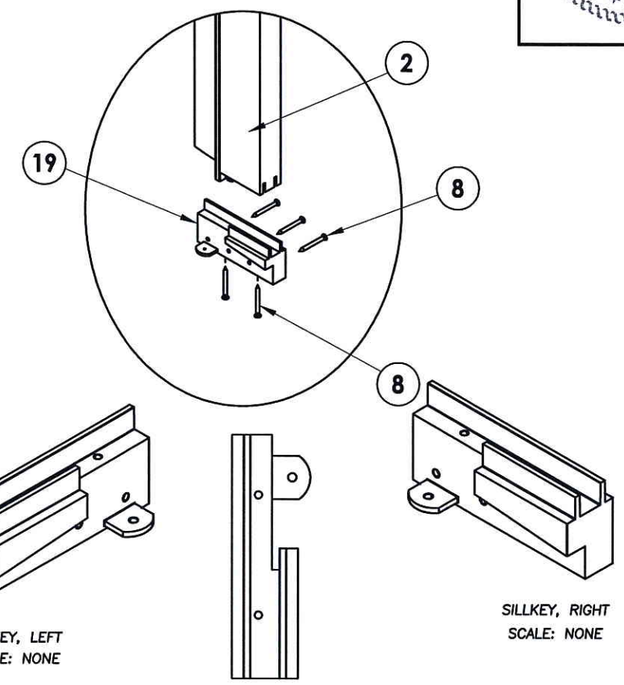

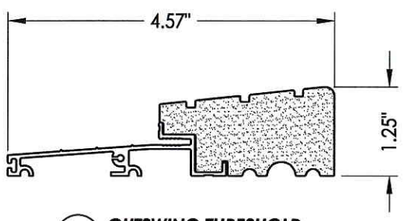

25 **OUTSWING THRESHOLD**
High-dam option

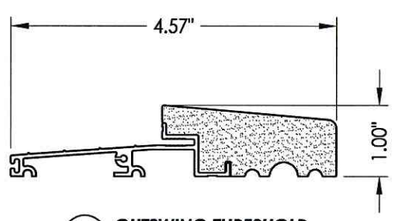

27 **OUTSWING THRESHOLD**

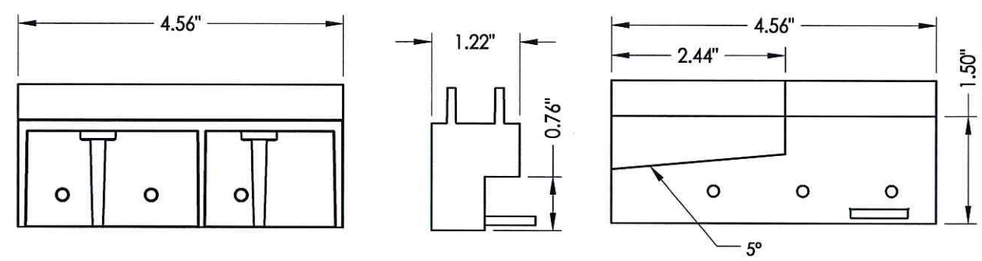

19 **SILLKEY DETAILS**
Optional

STATE OF TEXAS
LYNDON F. SCHMIDT
104123
LICENSED PROFESSIONAL ENGINEER

6.4.12

Documents Prepared By: Lyndon F. Schmidt, P.E.
TEXAS P.E. #104123

RW BUILDING CONSULTANTS, INC.
P.O. Box 230 Valrico FL. 33595
Phone No.: 813.659.9197

TEXAS BOARD OF PROFESSIONAL ENGINEERS
CERTIFICATE OF REGISTRATION # F-11852

PRODUCT: TRINITY GLASS INT'L

PART OR ASSEMBLY: COMPONENTS

NO.	DATE	BY

REVISIONS

DATE: 5/10/12
SCALE: N.T.S.
DWG. BY: JK
CHK. BY: LFS
DRAWING NO.: TX-4157
SHEET 11 OF 13

© 2012 R.W. BUILDING CONSULTANTS INC.

R:\A - Projects\Project Folders\Proj 1001-1100\pf1089\D. RWBC Drawings\TEXAS 2012\TX-4154-57.dwg, 11.4

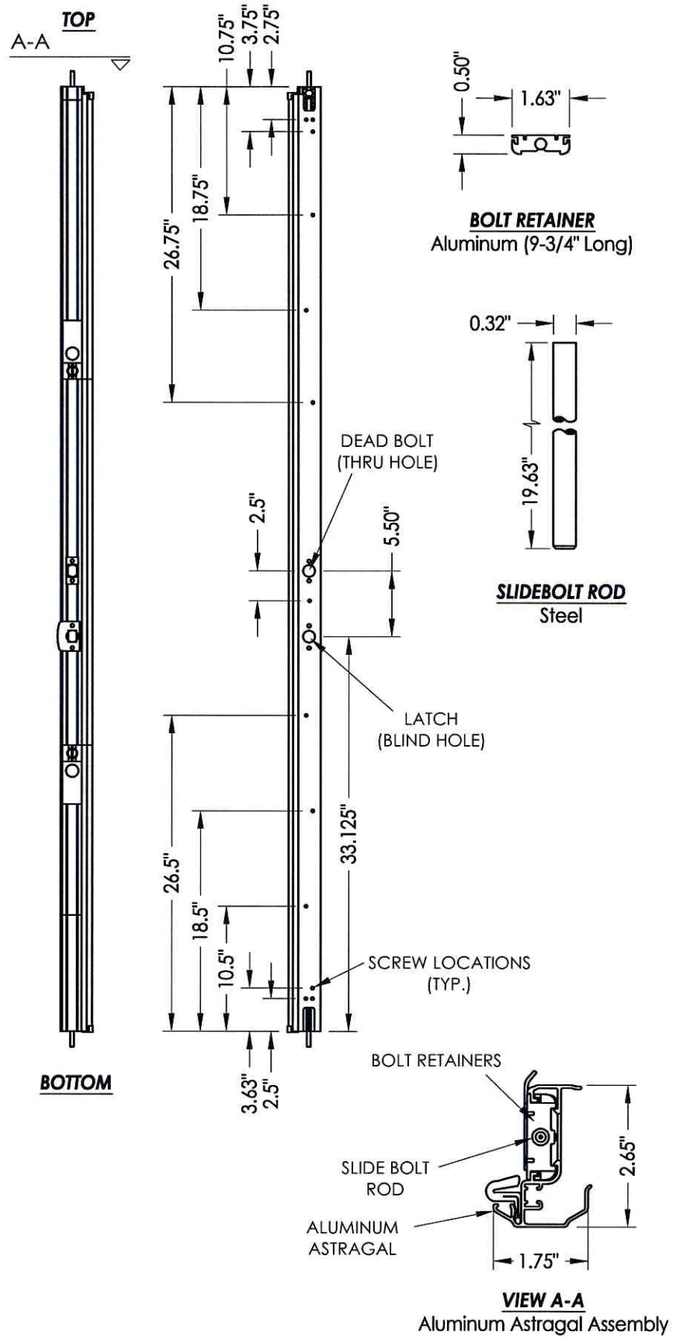

ENDURA ASTRAGAL
6'8 Aluminum Astragal by Endura Products

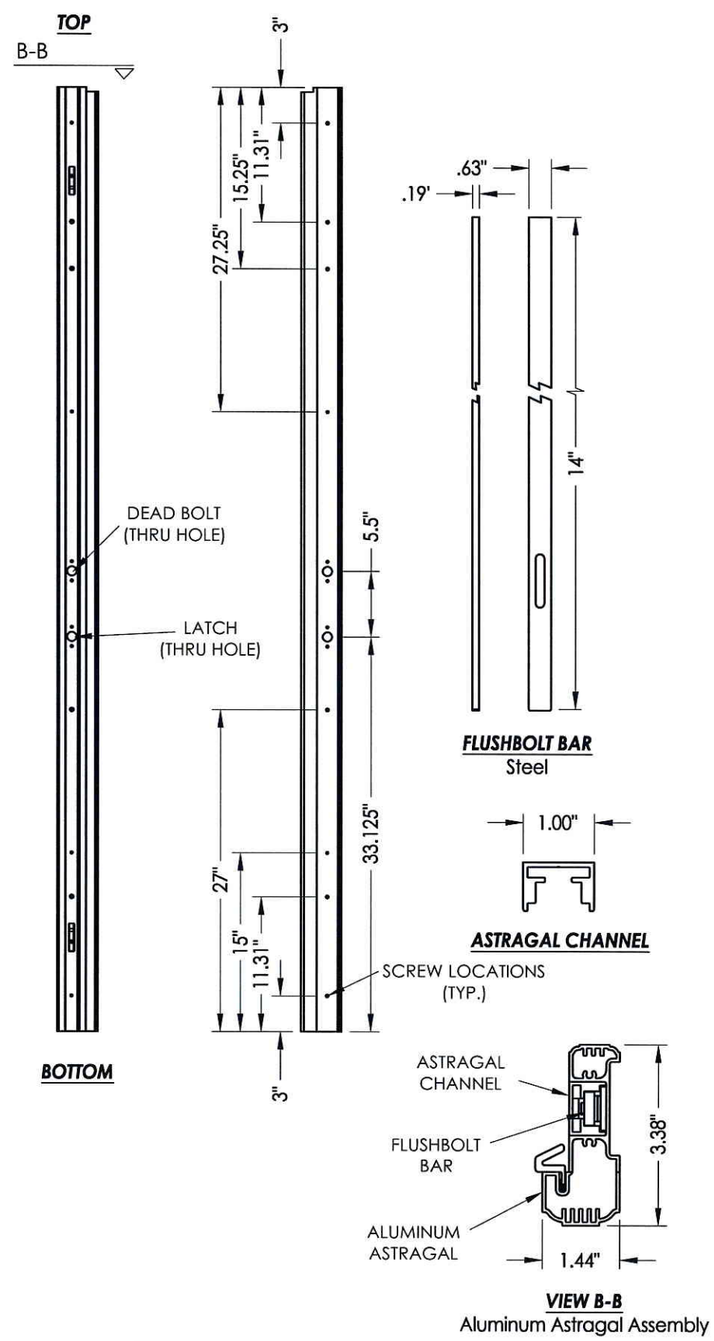

TRC ASTRAGAL
6'8 Aluminum Astragal by Trinity

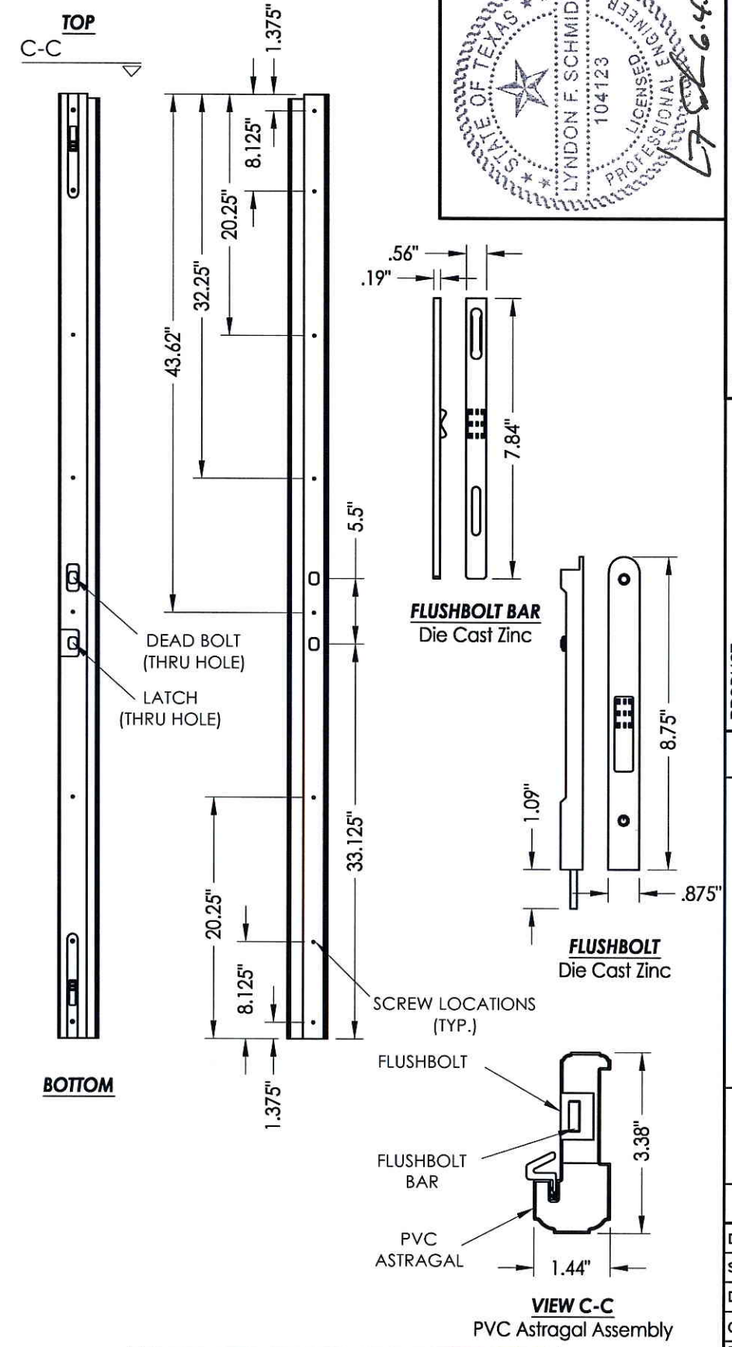

PVC ASTRAGAL
6'8 PVC Astragal by Trinity

STATE OF TEXAS
LYNDON F. SCHMIDT
104123
LICENSED
PROFESSIONAL ENGINEER
6.4.12

Documents Prepared By: Lyndon F. Schmidt, P.E.
TEXAS P.E. #104123

RW BUILDING CONSULTANTS, INC.
P.O. Box 230 Valrico FL. 33595
Phone No.: 813.659.9197

TEXAS BOARD OF PROFESSIONAL ENGINEERS
CERTIFICATE OF REGISTRATION # F-11852

PRODUCT: TRINITY GLASS INT'L

PART OR ASSEMBLY: ASTRAGAL DETAILS

NO.	DATE	BY

REVISIONS

DATE: 5/10/12
SCALE: N.T.S.
DWG. BY: JK
CHK. BY: LFS
DRAWING NO.: TX-4157
SHEET 12 OF 13

© 2012 R.W. BUILDING CONSULTANTS INC.

R:\A - Projects\Project Folders\Proj 1001-1100\pf1089\D. RWBC Drawings\TEXAS 2012\TX-4154-57.dwg, 12.4

BILL OF MATERIALS

ITEM #	DESCRIPTION	MATERIAL
A	2X FRAMING (G >= 0.55)	WOOD
C	1/4" MAX. SHIM SPACE	-
D	1/4" X 2-3/4" PFH ELCO OR ITW CONCRETE SCREW	STEEL
J	#9 X 2-1/4" PFH WS	STEEL
L	#8 X 2-1/2" PFH WS	STEEL
P	#10 X 3" PFH WS	STEEL
Q	3/16" X 2-3/4" PFH ITW CONCRETE SCREW	STEEL
1	JAMB (FINGER-JOINT PINE: G >= 0.42)	WOOD
2	JAMB	FIBERGLASS/COMP
3	JAMB	PVC
5	INSWING THRESHOLD ALUMINUM W/ COMPOSITE SUBSTRATE	ALUMINUM
6	DOOR BOTTOM SWEEP	PVC
8	#6 X 1-1/4 PFH DRYWALL SCREW	STEEL
12	WEATHER STRIP QEBD650 Q-LON	-
18	4" X 4" HINGE	STEEL
19	SILLKEY	PC/ASA
22	DEADBOLT STRIKE PLATE	STEEL
23	STRIKE PLATE	STEEL
24	#9 X 5/8" PFH WS	STEEL
25	OUTSWING HIGH-DAM THRESHOLD ALUMINUM W/ COMPOSITE SUBSTRATE	ALUM./ COMP.
26	#9 X 1" PFH WS	STEEL
27	OUTSWING THRESHOLD ALUMINUM W/ COMPOSITE SUBSTRATE	ALUM./ COMP.
40	DOOR PANEL - SEE DOOR PANEL DETAIL SHEET FOR CONSTRUCTION DETAILS	-
53	#8 X 1-3/4" PFH SMS	STEEL
54	ASTRAGAL STRIKE @ HEAD	STEEL
56	ASTRAGAL STRIKE @ SILL	STEEL
60	SIDELITE PANEL - SEE SIDELITE PANEL DETAIL SHEET FOR CONSTRUCTION DETAILS	-
62	QUARTER ROUND	WOOD
63	#8 X 2-1/4" PFH WOOD SCREW	STEEL
64	#8 X 2" PFH WOOD SCREW	STEEL
65	#10 X 2" PFH WOOD SCREW	STEEL
66	SIDELITE SPACER	PVC
68	1X MULLION (G >= 0.42)	WOOD

STATE OF TEXAS
LYNDON F. SCHMIDT
104123
LICENSED PROFESSIONAL ENGINEER
5-10-12

Documents Prepared By: Lyndon F. Schmidt, P.E.
TEXAS P.E. #104123

RW BUILDING CONSULTANTS, INC.
P.O. Box 230 Valrico FL. 33595
Phone No.: 813.659.9197

TEXAS BOARD OF PROFESSIONAL ENGINEERS
CERTIFICATE OF REGISTRATION # F-11852

PRODUCT: TRINITY GLASS INT'L

PART OR ASSEMBLY: BILL OF MATERIALS

NO.	DATE	BY

REVISIONS

DATE: 5/10/12
SCALE: N.T.S.
DWG. BY: JK
CHK. BY: LFS
DRAWING NO.: TX-4157
SHEET 13 OF 13

© 2012 R.W. BUILDING CONSULTANTS INC.

R:\A - Projects\Project Folders\Proj 1001-1100\pf1089\D. RWBC Drawings\TEXAS 2012\TX-4154-57.dwg, 13.4