FORCEFRONT
HURRICANE IMPACT
T34000 STOREFRONT

Sheet Index

Cover Sheet	1/21
Wet Glazed, Heavy Duty, +58/−55 psf	2/21 − 5/21
Wet Glazed, Heavy Duty, +60/−55 psf	6/21 − 9/21
Dry Glazed, Heavy Duty, +/− 55 psf	10/21 − 13/21
Wet Glazed, Standard Duty, +/− 50 psf	14/21 − 17/21
Dry Glazed, Heavy Duty, +/− 60 psf	18/21 − 21/21

Joseph A. Reed, PE
TX PE 100777
Architectural Testing, Inc.
TX Firm F−11869
130 Derry Ct.
York PA 17406
717−764−7700

Project No. D4091.03−122−34

STATE OF TEXAS
JOSEPH REED
100777
LICENSED
PROFESSIONAL ENGINEER
9/10/15

TUBELITE
DEPENDABLE
LEADERS IN ECO-EFFICIENT STOREFRONT, CURTAINWALL AND ENTRANCE SYSTEMS

3056 WALKER RIDGE DRIVE N.W.
WALKER, MICHIGAN 49544
PH: 800.866.2227
FX: 616.301.0008
WEB SITE: WWW.TUBELITEINC.COM

TUBELITE
FORCEFRONT
HURRICANE IMPACT
T34000 STOREFRONT

REVISIONS			
NO.	DATED	BY	DESCRIPTION
-	-	-	-

DATED	LATEST RELEASE
11−11−13	7−30−14

DRAWINGS BY: HLP
ENGINEERED BY:

Sheet 1/21

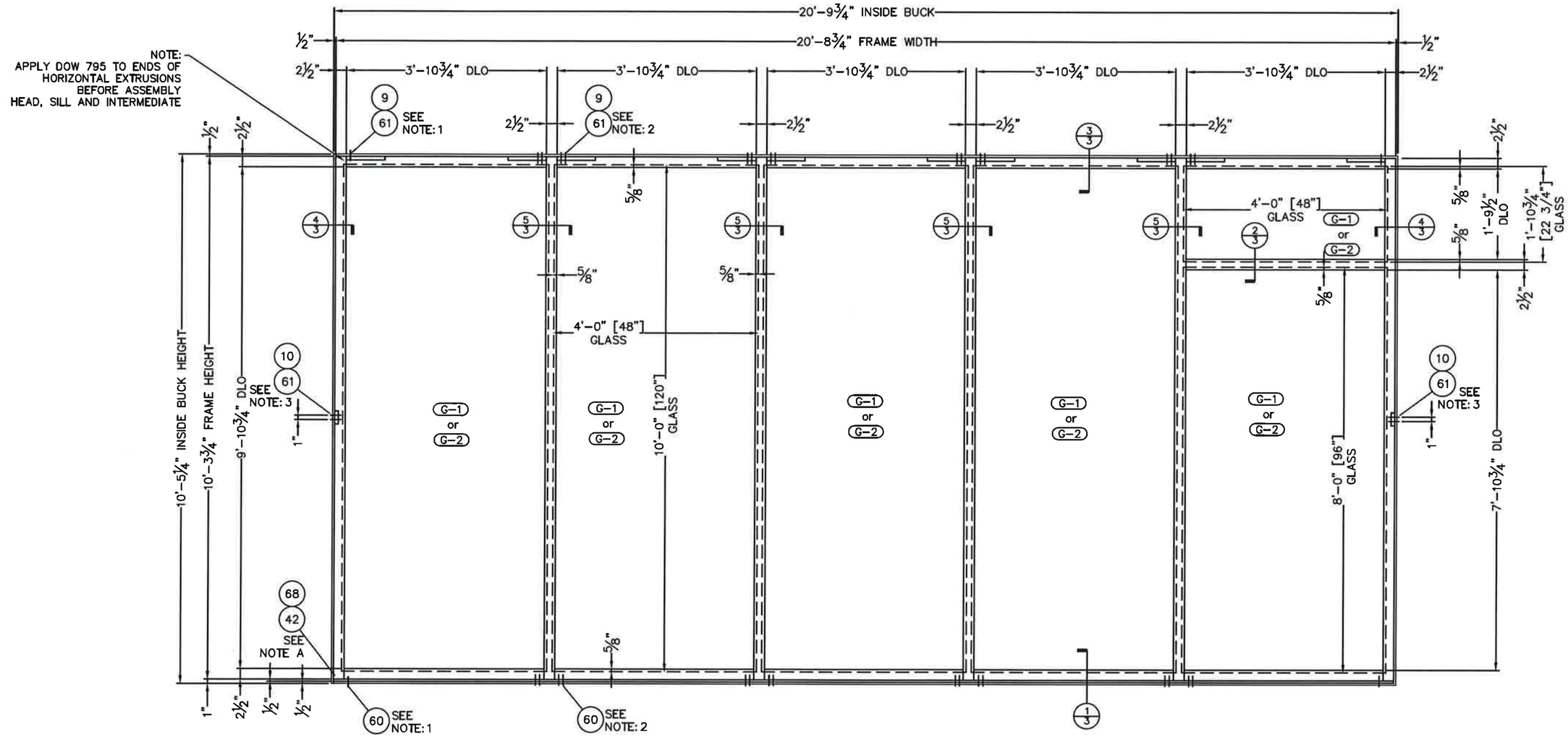

NOTE A: END DAM ITEM 42 (OUTSIDE JAMB) ATTACHED W/(2) ITEM 68

T34000 STOREFRONT

HURRICANE IMPACT +58/-55 PSF
THERMAL EXTRUSIONS, HEAVY DUTY MULLION
WET GLAZED
COMMON ANCHORS

NOTE 1: (1) FASTENER REQ'D AS MARKED. 1" FROM SIDE OF JAMB MULLION & 2" CEN TO CEN.

NOTE 2: (4) FASTENERS REQ'D AS MARKED. 1" FROM SIDE OF MULLION & 2" CEN TO CEN (2) EA SIDE OF TYPICAL MULLIONS.

NOTE 3: LOCATE ITEM 10 @ MIDSPAN (2) FASTENERS REQ'D AS MARKED. 2" CEN TO CEN.

GLAZING TYPES

TAG	DESCRIPTION
G-1	1 5/16" THK INSULATED GLASS -1/4" CLEAR, TEMPERED -1/2" AIRSPACE -1/4" CLEAR, HEAT STRENGTHENED -0.077 SOLUTIA VS-02 -1/4" CLEAR, HEAT STRENGTHENED
G-2	1 5/16" THK INSULATED GLASS -1/4" CLEAR, TEMPERED -1/2" AIRSPACE -1/4" CLEAR, HEAT STRENGTHENED -0.090" DUPONT SENTRY GLAS PLUS -1/4" CLEAR, HEAT STRENGTHENED

STATE OF TEXAS
100777
LICENSED
PROFESSIONAL ENGINEER
9/10/15

TUBELITE FORCEFRONT HURRICANE IMPACT T34000 STOREFRONT

TUBELITE®
DEPENDABLE
LEADERS IN ECO-EFFICIENT STOREFRONT, CURTAINWALL AND ENTRANCE SYSTEMS
3056 WALKER RIDGE DRIVE N.W.
WALKER, MICHIGAN 49544
PH: 800.866.2227
FX: 616.301.0008
WEB SITE: WWW.TUBELITEINC.COM

REVISIONS

NO.	DATED	BY	DESCRIPTION
-	-	-	-

DATED	LATEST RELEASE
11-11-13	7-30-14

DRAWINGS BY: HLP
ENGINEERED BY:

Sheet 2/21

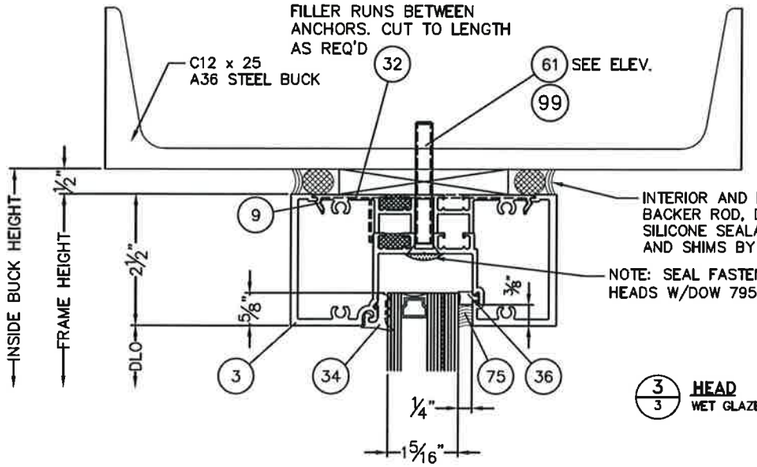

3/3 HEAD
WET GLAZED

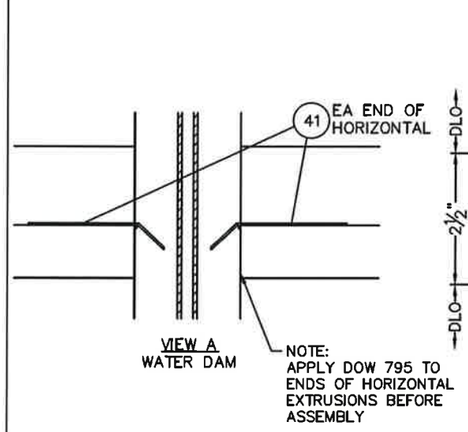

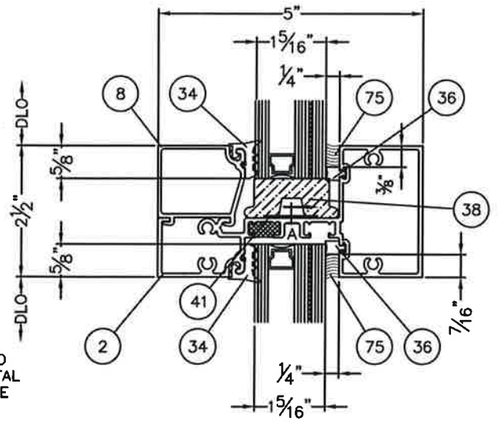

2/3 HORIZONTAL
WET GLAZED

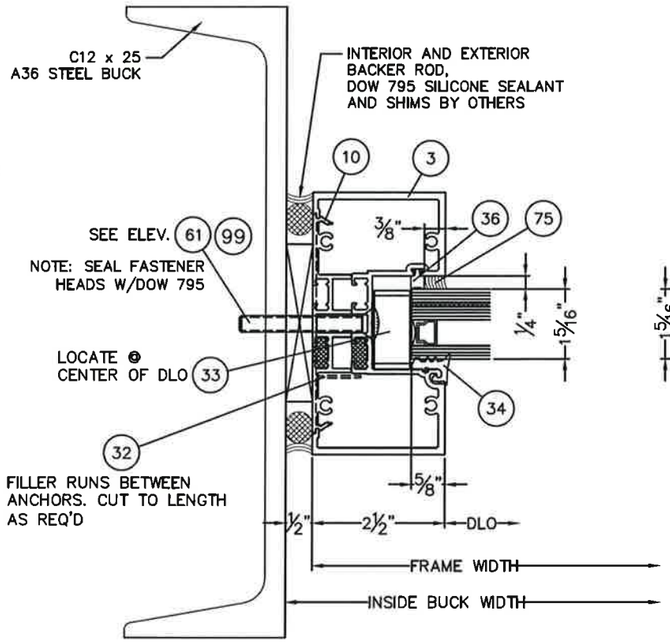

4/3 JAMB MULLION
WET GLAZED

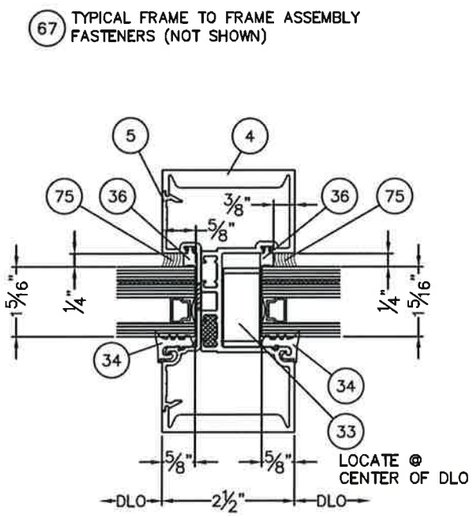

5/3 HD MULLION
WET GLAZED

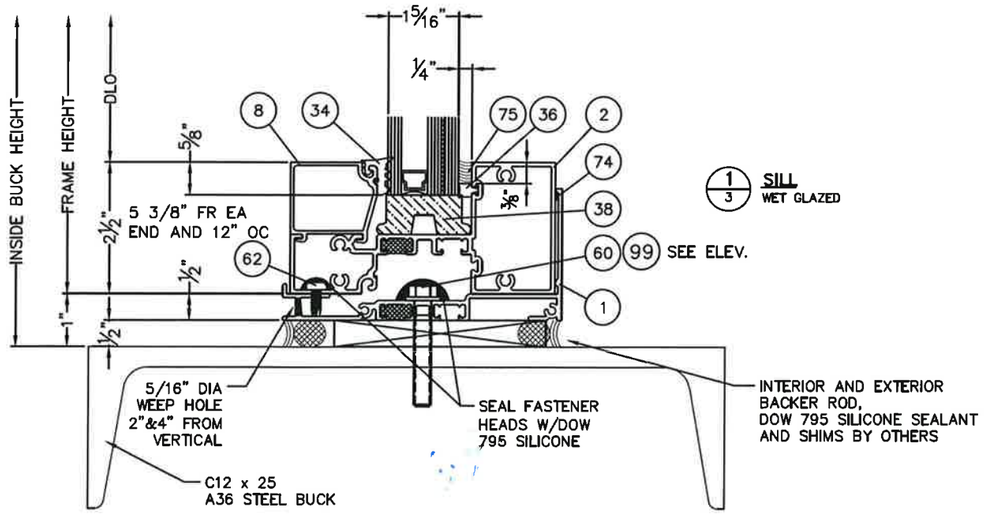

1/3 SILL
WET GLAZED

STATE OF TEXAS
JOSEPH A. REED
100777
LICENSED
PROFESSIONAL ENGINEER
9/10/15

TUBELITE
FORCEFRONT
HURRICANE IMPACT
T34000 STOREFRONT

TUBELITE®
DEPENDABLE
LEADERS IN ECO-EFFICIENT STOREFRONT, CURTAINWALL AND ENTRANCE SYSTEMS
3056 WALKER RIDGE DRIVE N.W.
WALKER, MICHIGAN 49544
PH: 800.866.2227
FX: 616.301.0008
WEB SITE: WWW.TUBELITEINC.COM

REVISIONS	NO.	DATED	BY	DESCRIPTION
	-	-	-	-

DATED	LATEST RELEASE
11-11-13	7-30-14

DRAWINGS BY: HLP
ENGINEERED BY:

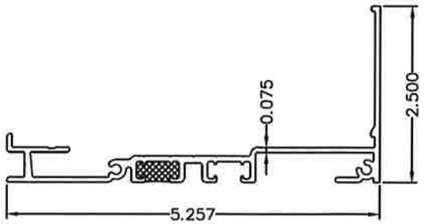

ITEM 1–T34259
SUB SILL

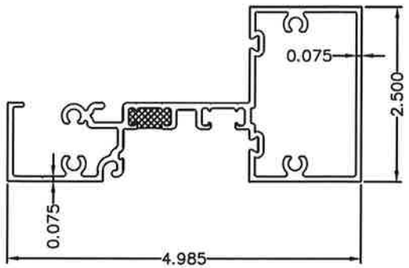

ITEM 2–T34143
INTERMEDIATE HORIZONTAL/SILL

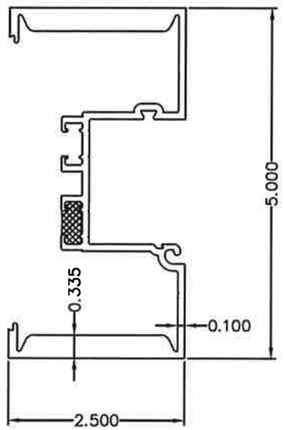

ITEM 4–T34261
HD VERTICAL

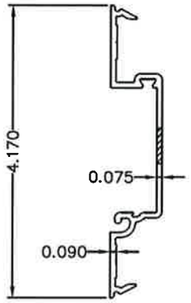

ITEM 5–T34445 (SLOTTED)
SHALLOW POCKET FILLER

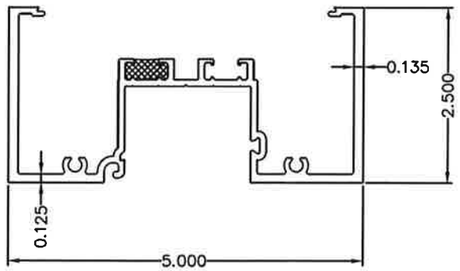

ITEM 3–T34441
VERTICAL/HEAD

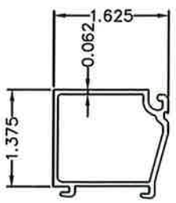

ITEM 8–E34104
GLASS STOP SILL/HORIZONTAL

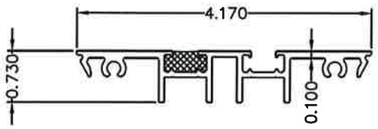

ITEM 9–P3446T 9" LG
(T34442) FILLER FOR STANDARD ANCHORING

ITEM 10–P3445T 3" LG
(T34442) FILLER FOR STANDARD ANCHORING

STATE OF TEXAS
JOSEPH A. REED
100777
LICENSED
PROFESSIONAL ENGINEER
9/10/14

TUBELITE
FORCEFRONT
HURRICANE IMPACT
T34000 STOREFRONT

TUBELITE®
DEPENDABLE
LEADERS IN ECO-EFFICIENT STOREFRONT, CURTAINWALL AND ENTRANCE SYSTEMS

3056 WALKER RIDGE DRIVE N.W.
WALKER, MICHIGAN 49544
PH: 800.866.2227
FX: 616.301.0008
WEB SITE: WWW.TUBELITEINC.COM

REVISIONS			
NO.	DATED	BY	DESCRIPTION
-	-	-	-

DATED	LATEST RELEASE
11–11–13	7–30–14

DRAWINGS BY: HLP
ENGINEERED BY:

HURRICANE STOREFRONT TEST SPECIMEN – PARTS LIST				MATERIAL
ITEM	QTY	PART NUMBER	DESCRIPTION	
1	1	T34259	EXTRUSION ~ SUB SILL	ALUMINUM–6063–T6
2	6	T34143	EXTRUSION ~ INTERMEDIATE HORIZONTAL/SILL	ALUMINUM–6063–T6
3	7	T34441	EXTRUSION ~ VERTICAL/HEAD	ALUMINUM–6063–T6
4	4	T34261	EXTRUSION ~ HD VERTICAL	ALUMINUM–6063–T6
5	4	T34445	EXTRUSION ~ SHALLOW POCKET FILLER	ALUMINUM–6063–T6
6				
7				
8	5	E34104	EXTRUSION ~ GLASS STOP SILL/HORIZONTAL	ALUMINUM–6063–T5
9	10	P3446T	EXTRUSION ~ SNAP IN FILLER (T34442)	ALUMINUM–6063–T6
10	2	P3445T	EXTRUSION ~ SNAP IN FILLER (T34442)	ALUMINUM–6063–T6
11				
12				
13				
14				
15				
16				
17				
18				
19				
20				
21				
22				
23				
24				
25				
26				
27				
28				
29				
30				
31				
32	4 @ 10'–0"	P3443	PERIMETER CAULK BACKER – FLAT LEG SNAP IN FILLER	P–PART–RIGID PVC
33	6	P1916	W ANTI–WALK BLOCK	P–PART–EPDM
34	150'	P6503	TOP LOAD WEDGE GASKET, GLASS, EPG	P–PART–RUBBER
35				
36	150'	P6587	WET GLAZE GASKET, GLASS, EPG	P–PART–RUBBER
37				
38	12	P6541	SETTING BLOCK 3/4 x 1 3/4 x 4" LG	P–PART–RUBBER
39				
40				
41	2	P6581	WATER DIVERTER	P–PART–PVC
42	2	P1156	END DAM FOR SUB SILL	P–PART–ALUM .040 SHT.
43				
44				
45				
46				
47				
48				
49				
50				
51				
52				
53				
54				
55				
56				
57				
58				
59				

ITEM	QTY	PART NUMBER	DESCRIPTION	MATERIAL
60	18	BY OTHERS	SCREW ~ 5/16"–18 x 2" HEX HD MS SS W/FWS (FR. TO STEEL BUCK)	P–PART–FASTENER
61	22	BY OTHERS	SCREW ~ 5/16"–18 x 2 1/2" FH MS SS (FR. TO STEEL BUCK)	P–PART–FASTENER
62	20	S206	SCREW ~ #10–24 x 1/2" P PH TYPE 23 ST (SILL TO SUB SILL)	P–PART–FASTENER
63				
64				
65				
66				
67	88	S419	SCREW ~ #12–14 x 1 1/2" HWH SD #3PT (FRAME TO FRAME)	P–PART–FASTENER
68	4	S196	SCREW ~ #8 X 3/8" SELF TAPPING PAN HEAD (END DAM TO SUB SILL)	P–PART–FASTENER
69				
70				
71				
72				
73				
74	AS REQ'D	BY OTHERS	SILICONE SEALANT DOW 795	P–PART–SEALANT
75	AS REQ'D	BY OTHERS	SILICONE SEALANT DOW 995	P–PART–SEALANT
76				
77				
78				
79				
80				
81				
82				
83				
84				
85				
86				
87				
88				
89				
90				
91				
92				
93				
94				
95				
96				
97				
98				
99	AS REQ'D	BY OTHERS	3/8" Hilti KB–3 1–3/4" Spacing, 2" Embed, 5" Edge Dist.	Alternate Anchor
100				
101				
102				
103				

STATE OF TEXAS
JOSEPH A. REED
80717
LICENSED
PROFESSIONAL ENGINEER
9/10/15

TUBELITE
FORCEFRONT
HURRICANE IMPACT
T34000 STOREFRONT

TUBELITE®
DEPENDABLE
LEADERS IN ECO-EFFICIENT STOREFRONT, CURTAINWALL AND ENTRANCE SYSTEMS

3056 WALKER RIDGE DRIVE N.W.
WALKER, MICHIGAN 49544
PH: 800.866.2227
FX: 616.301.0008
WEB SITE: WWW.TUBELITEINC.COM

REVISIONS			
NO.	DATED	BY	DESCRIPTION
–	–	–	–

DATED	LATEST RELEASE
11–11–13	7–30–14

DRAWINGS BY: HLP
ENGINEERED BY:

Sheet 5/21

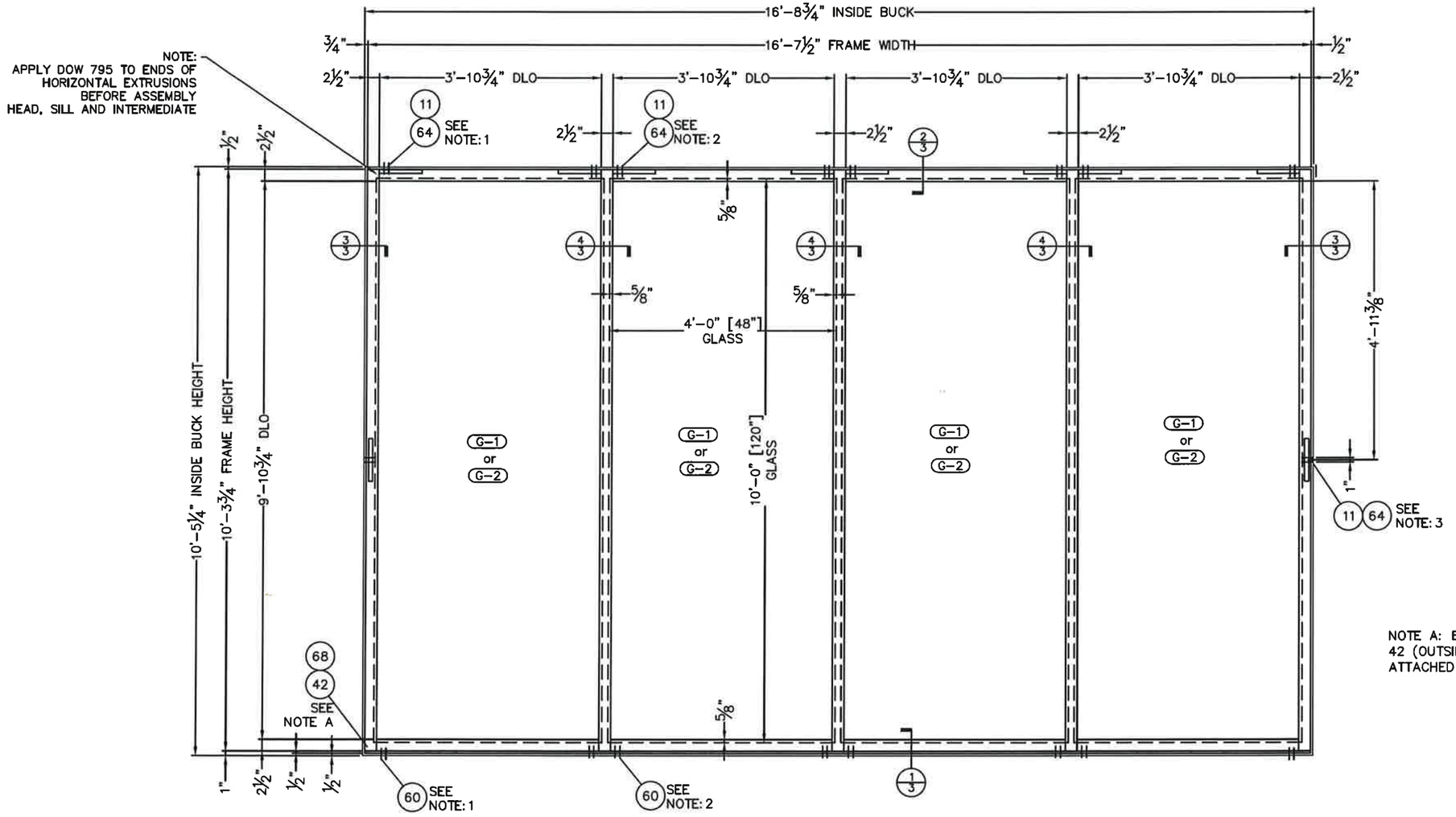

NOTE A: END DAM ITEM
42 (OUTSIDE JAMB)
ATTACHED W/(2) ITEM 68

T34000 STOREFRONT

HURRICANE IMPACT +60/−55 PSF
THERMAL EXTRUSIONS, HEAVY DUTY MULLION
WET GLAZED
STRAP ANCHORS

NOTE 1: (2) FASTENERS REQ'D AS MARKED.
1" FROM SIDE OF MULLION & 2" CEN TO CEN
TYPICAL @ JAMB MULLION.

NOTE 2: (4) FASTENERS REQ'D AS MARKED.
1" FROM SIDE OF MULLION & 2" CEN TO CEN
(2) EA SIDE OF TYPICAL MULLIONS.

NOTE 3: LOCATE ITEM 9 @ CENTER OF DLO
(2) FASTENERS REQ'D AS MARKED.
2" CEN TO CEN
TYPICAL EA JAMB MULLION.

GLAZING TYPES

TAG	DESCRIPTION
G-1	1 5/16" THK INSULATED GLASS −1/4" CLEAR, TEMPERED −1/2" AIRSPACE −1/4" CLEAR, HEAT STRENGTHENED −0.077 SOLUTIA VS−02 −1/4" CLEAR, HEAT STRENGTHENED
G-2	1 5/16" THK INSULATED GLASS −1/4" CLEAR, TEMPERED −1/2" AIRSPACE −1/4" CLEAR, HEAT STRENGTHENED −0.090" DUPONT SENTRY GLAS PLUS −1/4" CLEAR, HEAT STRENGTHENED

STATE OF TEXAS
JOSEPH A. REED
100777
LICENSED
PROFESSIONAL ENGINEER
9/10/15

TUBELITE FORCEFRONT HURRICANE IMPACT T34000 STOREFRONT

TUBELITE®
DEPENDABLE
LEADERS IN ECO-EFFICIENT STOREFRONT, CURTAINWALL AND ENTRANCE SYSTEMS
3056 WALKER RIDGE DRIVE N.W.
WALKER, MICHIGAN 49544
PH: 800.866.2227
FX: 616.301.0008
WEB SITE: WWW.TUBELITEINC.COM

REVISIONS			
NO.	DATED	BY	DESCRIPTION
-	-	-	-

DATED	LATEST RELEASE
11-11-13	7-30-14

DRAWINGS BY: HLP
ENGINEERED BY:

Sheet 6/21

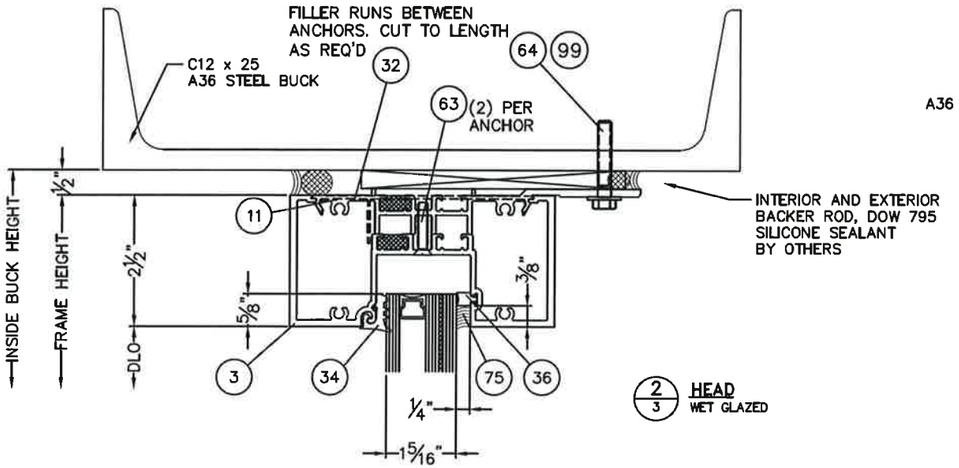

2/3 HEAD
WET GLAZED

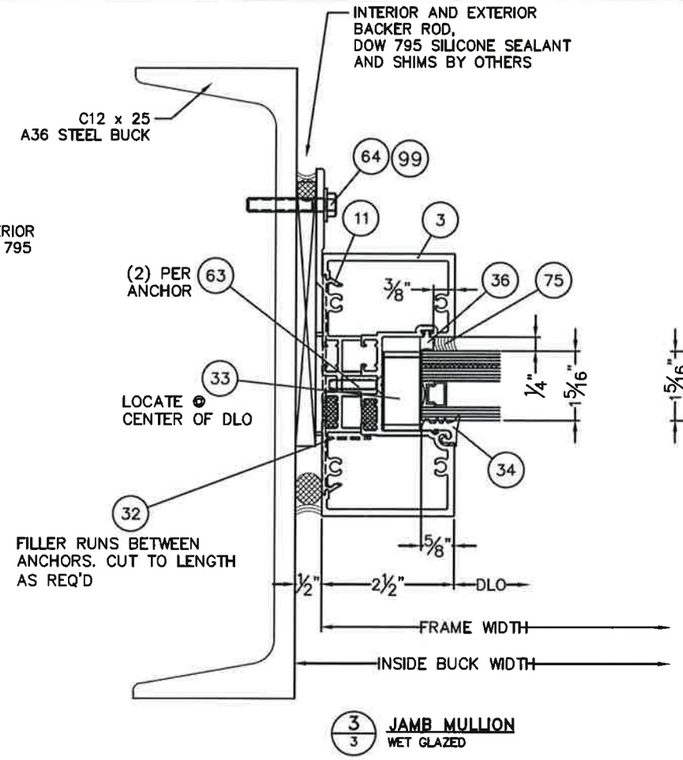

3/3 JAMB MULLION
WET GLAZED

67 TYPICAL FRAME TO FRAME ASSEMBLY FASTENERS (NOT SHOWN)

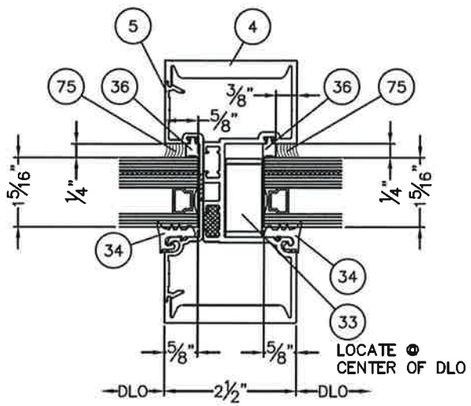

4/3 HD MULLION
WET GLAZED

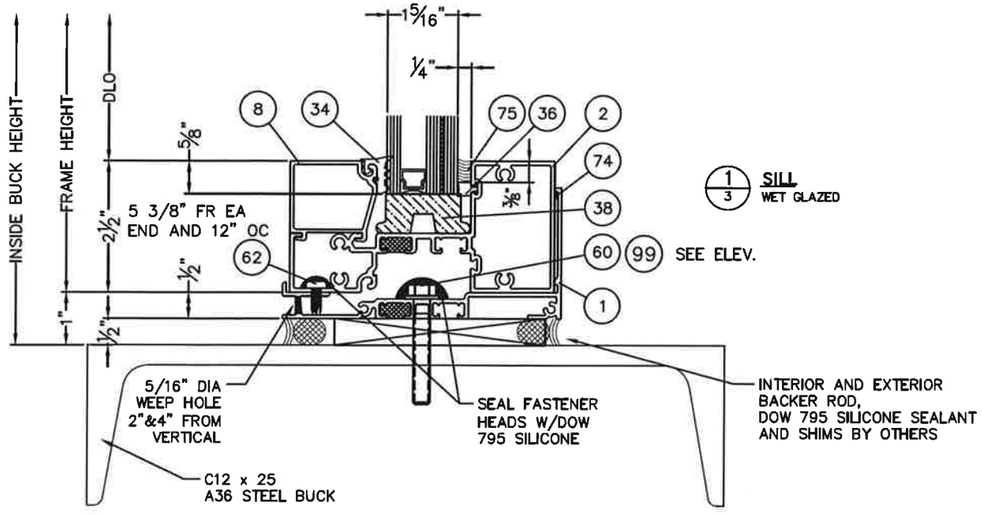

1/3 SILL
WET GLAZED

STATE OF TEXAS
JOSEPH A. REED
100777
LICENSED PROFESSIONAL ENGINEER
9/10/15

TUBELITE FORCEFRONT HURRICANE IMPACT T34000 STOREFRONT

TUBELITE® DEPENDABLE
LEADERS IN ECO-EFFICIENT STOREFRONT, CURTAINWALL AND ENTRANCE SYSTEMS

3056 WALKER RIDGE DRIVE N.W.
WALKER, MICHIGAN 49544
PH: 800.866.2227
FX: 616.301.0008
WEB SITE: WWW.TUBELITEINC.COM

REVISIONS	NO.	DATED	BY	DESCRIPTION
	-	-	-	-

DATED	LATEST RELEASE
11-11-13	7-30-14

DRAWINGS BY: HLP
ENGINEERED BY:

Sheet 7/21

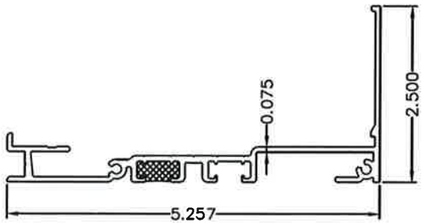

ITEM 1–T34259
SUB SILL

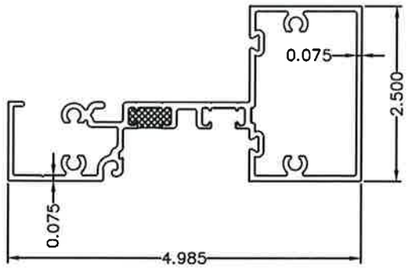

ITEM 2–T34143
INTERMEDIATE HORIZONTAL/SILL

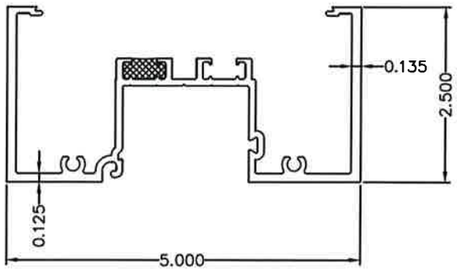

ITEM 3–T34441
VERTICAL/HEAD

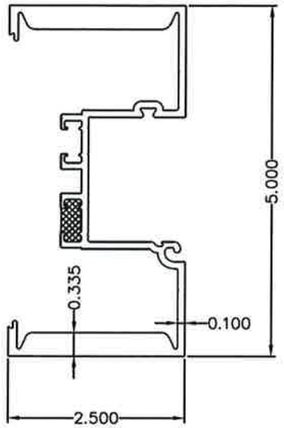

ITEM 4–T34261
HD VERTICAL

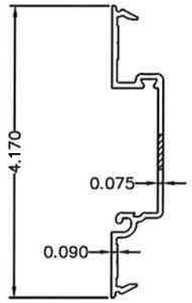

ITEM 5–T34445 (SLOTTED)
SHALLOW POCKET FILLER

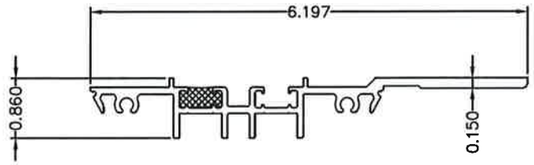

ITEM 11–P3432T 9" LG
(T34031) STRAP ANCHOR

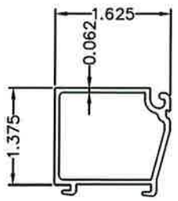

ITEM 8–E34104
GLASS STOP SILL/HORIZONTAL

TUBELITE
FORCEFRONT
HURRICANE IMPACT
T34000 STOREFRONT

TUBELITE
DEPENDABLE
LEADERS IN ECO-EFFICIENT STOREFRONT, CURTAINWALL AND ENTRANCE SYSTEMS

3056 WALKER RIDGE DRIVE N.W.
WALKER, MICHIGAN 49544
PH: 800.866.2227
FX: 616.301.0008
WEB SITE: WWW.TUBELITEINC.COM

REVISIONS			
NO.	DATED	BY	DESCRIPTION
-	-	-	-

DATED	LATEST RELEASE
11–11–13	7–30–14

DRAWINGS BY: HLP
ENGINEERED BY:

Sheet 8/21

HURRICANE STOREFRONT TEST SPECIMEN – PARTS LIST				MATERIAL
ITEM	QTY	PART NUMBER	DESCRIPTION	
1	1	T34259	EXTRUSION ~ SUB SILL	ALUMINUM–6063–T6
2	4	T34143	EXTRUSION ~ INTERMEDIATE HORIZONTAL/SILL	ALUMINUM–6063–T6
3	6	T34441	EXTRUSION ~ VERTICAL/HEAD	ALUMINUM–6063–T6
4	3	T34261	EXTRUSION ~ HD VERTICAL	ALUMINUM–6063–T6
5	3	T34445	EXTRUSION ~ SHALLOW POCKET FILLER	ALUMINUM–6063–T6
6				
7				
8	4	E34104	EXTRUSION ~ GLASS STOP SILL/HORIZONTAL	ALUMINUM–6063–T5
9				
10				
11	6	P3432T	EXTRUSION ~ STRAP ANCHOR (T34031)	ALUMINUM–6063–T6
12				
13				
14				
15				
16				
17				
18				
19				
20				
21				
22				
23				
24				
25				
26				
27				
28				
29				
30				
31				
32	3 @ 10'–0"	P3443	PERIMETER CAULK BACKER – FLAT LEG SNAP IN FILLER	P–PART–RIGID PVC
33	5	P1916	W ANTI–WALK BLOCK	P–PART–EPDM
34	115'	P6503	TOP LOAD WEDGE GASKET, GLASS, EPG	P–PART–RUBBER
35				
36	115'	P6587	WET GLAZE GASKET, GLASS, EPG	P–PART–RUBBER
37				
38	8	P6541	SETTING BLOCK 3/4 x 1 3/4 x 4" LG	P–PART–RUBBER
39				
40				
41				
42	2	P1156	END DAM FOR SUB SILL	P–PART–ALUM .040 SHT.
43				
44				
45				
46				
47				
48				
49				
50				
51				
52				
53				
54				
55				
56				
57				
58				
59				

ITEM	QTY	PART NUMBER	DESCRIPTION	MATERIAL
60	16	BY OTHERS	SCREW ~ 5/16"–18 x 2" HEX HD MS SS W/FWS (FR. TO STEEL BUCK)	P–PART–FASTENER
61				
62	16	S206	SCREW ~ #10–24 x 1/2" P PH TYPE 23 ST (SILL TO SUB SILL)	P–PART–FASTENER
63	20	BY OTHERS	#10 x 1 SELF TAPPING FW (STRAP ANCHOR TO HORIZONTAL)	P–PART–FASTENER
64	20	BY OTHERS	SCREW ~ 5/16"–18 x 1 1/2" HEX HD MS SS W/FWS (FR. TO STEEL BUCK)	P–PART–FASTENER
65				
66				
67	64	S419	SCREW ~ #12–14 x 1 1/2" HWH SD #3PT (FRAME TO FRAME)	P–PART–FASTENER
68	4	S196	SCREW ~ #8 X 3/8" SELF TAPPING PAN HEAD (END DAM TO SUB SILL)	P–PART–FASTENER
69				
70				
71				
72				
73				
74	AS REQ'D	BY OTHERS	SILICONE SEALANT DOW 795	P–PART–SEALANT
75	AS REQ'D	BY OTHERS	SILICONE SEALANT DOW 995	P–PART–SEALANT
76				
77				
78				
79				
80				
81				
82				
83				
84				
85				
86				
87				
88				
89				
90				
91				
92				
93				
94				
95				
96				
97				
98				
99	AS REQ'D	BY OTHERS	3/8" Hilti KB–3 1–3/4" Spacing, 2" Embed, 5" Edge Dist.	Alternate Anchor
100				
101				
102				
103				

STATE OF TEXAS
JOSEPH A. REED
100777
LICENSED
PROFESSIONAL ENGINEER
9/10/15

TUBELITE
FORCEFRONT
HURRICANE IMPACT
T34000 STOREFRONT

TUBELITE® DEPENDABLE
LEADERS IN ECO-EFFICIENT STOREFRONT, CURTAINWALL AND ENTRANCE SYSTEMS

3056 WALKER RIDGE DRIVE N.W.
WALKER, MICHIGAN 49544
PH: 800.866.2227
FX: 616.301.0008
WEB SITE: WWW.TUBELITEINC.COM

REVISIONS			
NO.	DATED	BY	DESCRIPTION
–	–	–	–

DATED	LATEST RELEASE
11–11–13	7–30–14

DRAWINGS BY: HLP
ENGINEERED BY:

Sheet 9/21

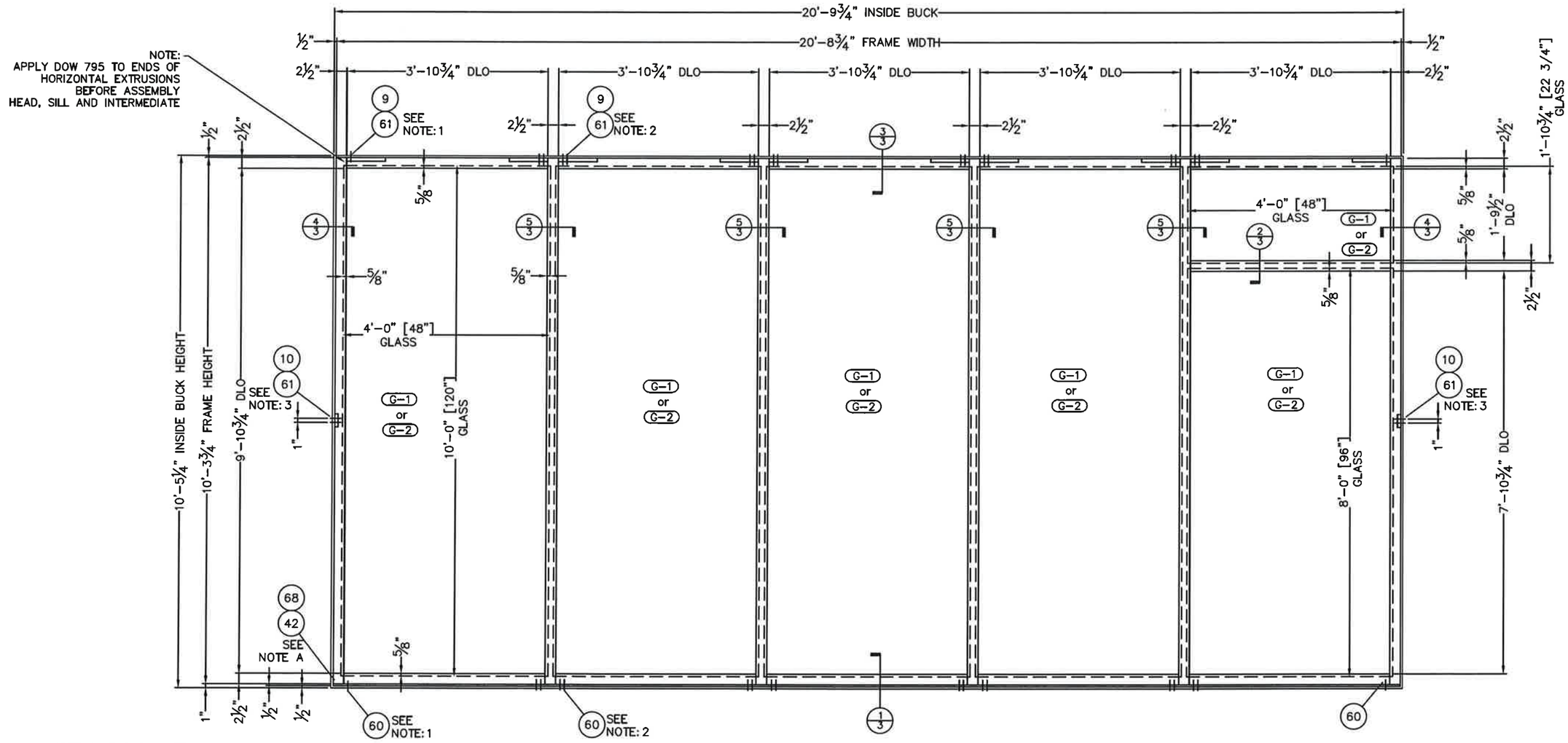

NOTE A: END DAM ITEM
42 (OUTSIDE JAMB)
ATTACHED W/(2) ITEM 68

STATE OF TEXAS
JOSEPH A. REED
100777
LICENSED
PROFESSIONAL ENGINEER
9/10/15

T34000 STOREFRONT

HURRICANE IMPACT +55/-55 PSF
THERMAL EXTRUSIONS, HEAVY DUTY MULLION
DRY GLAZED
COMMON ANCHORS

NOTE 1: (1) FASTENER REQ'D AS MARKED.
1" FROM SIDE OF JAMB MULLION & 2" CEN TO CEN.

NOTE 2: (4) FASTENERS REQ'D AS MARKED.
1" FROM SIDE OF MULLION & 2" CEN TO CEN
(2) EA SIDE OF TYPICAL MULLIONS.

NOTE 3: LOCATE ITEM 10 @ MIDSPAN
(2) FASTENERS REQ'D AS MARKED.
2" CEN TO CEN.

GLAZING TYPES

TAG	DESCRIPTION
G-1	1 5/16" THK INSULATED GLASS -1/4" CLEAR, TEMPERED -1/2" AIRSPACE -1/4" CLEAR, HEAT STRENGTHENED -0.077 SOLUTIA VS-02 -1/4" CLEAR, HEAT STRENGTHENED
G-2	1 5/16" THK INSULATED GLASS -1/4" CLEAR, TEMPERED -1/2" AIRSPACE -1/4" CLEAR, HEAT STRENGTHENED -0.090" DUPONT SENTRY GLAS PLUS -1/4" CLEAR, HEAT STRENGTHENED

TUBELITE
FORCEFRONT
HURRICANE IMPACT
T34000 STOREFRONT

TUBELITE
DEPENDABLE
LEADERS IN ECO-EFFICIENT STOREFRONT, CURTAINWALL AND ENTRANCE SYSTEMS
3056 WALKER RIDGE DRIVE N.W.
WALKER, MICHIGAN 49544
PH: 800.866.2227
FX: 616.301.0008
WEB SITE: WWW.TUBELITEINC.COM

REVISIONS			
NO.	DATED	BY	DESCRIPTION
-	-	-	-

DATED	LATEST RELEASE
11-11-13	7-30-14

DRAWINGS BY: HLP
ENGINEERED BY:

Sheet 10/21

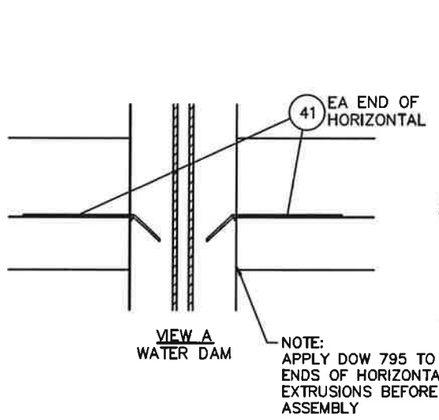

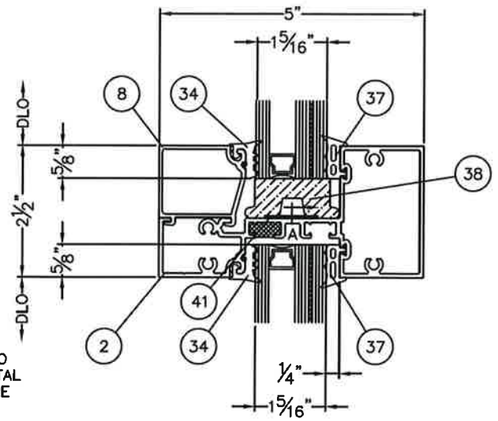

2/3 HORIZONTAL
DRY GLAZED

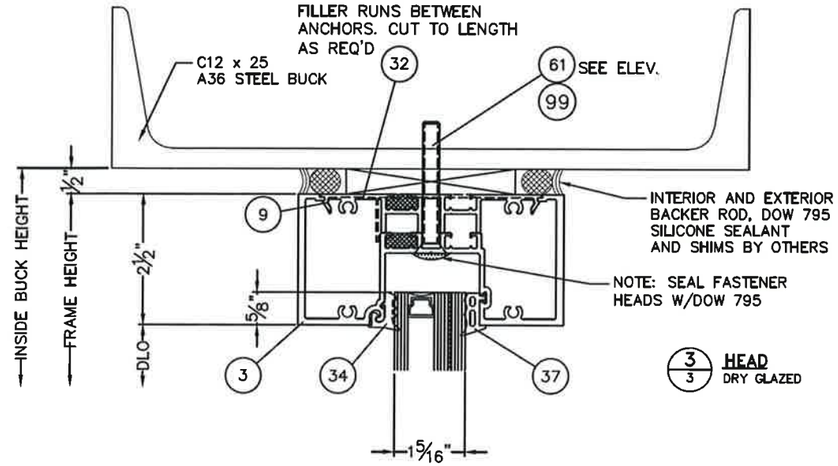

3/3 HEAD
DRY GLAZED

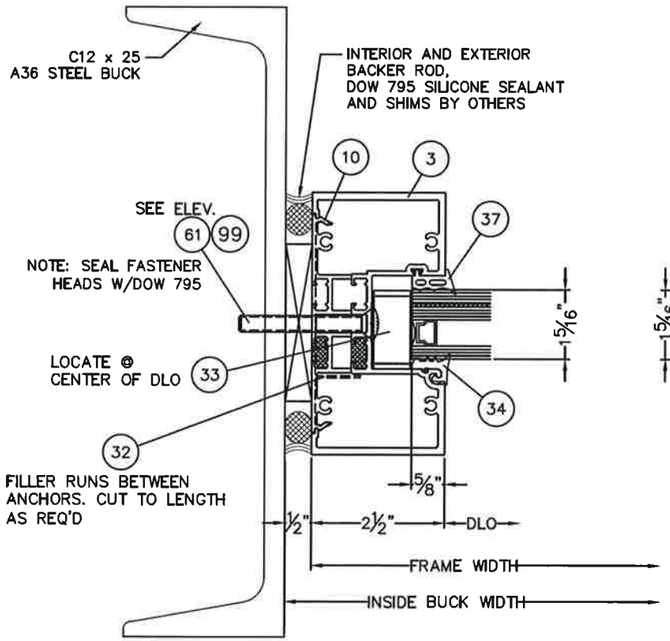

4/3 JAMB MULLION
DRY GLAZED

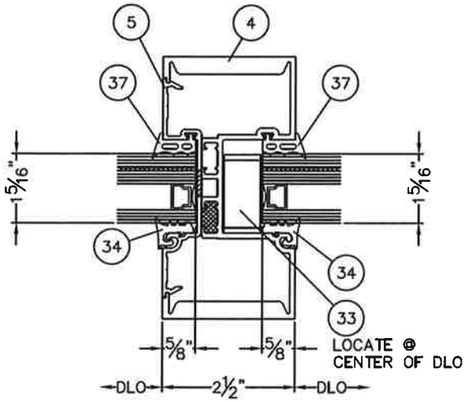

5/3 HD MULLION
DRY GLAZED

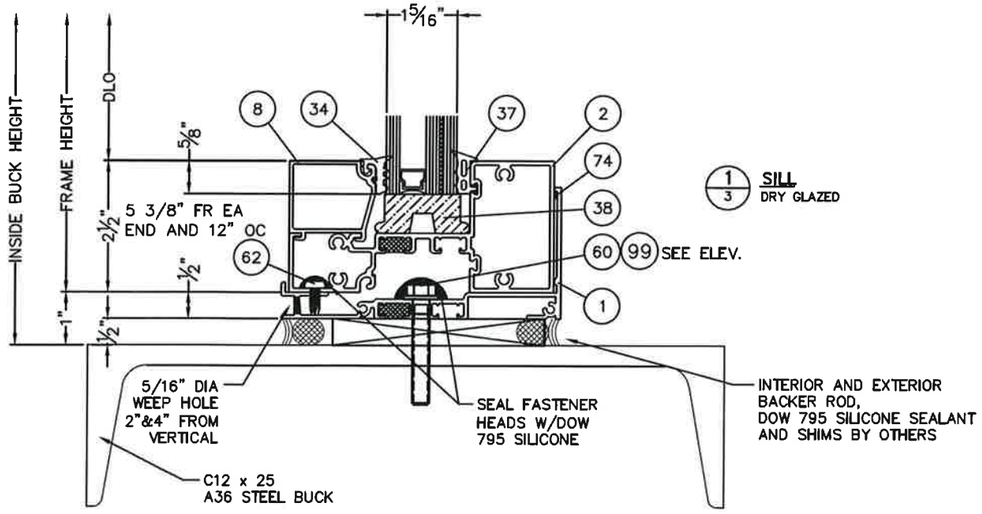

1/3 SILL
DRY GLAZED

STATE OF TEXAS
JOSEPH A. REED
100777
LICENSED
PROFESSIONAL ENGINEER
3/10/15

TUBELITE FORCEFRONT HURRICANE IMPACT T34000 STOREFRONT

TUBELITE®
DEPENDABLE
LEADERS IN ECO-EFFICIENT STOREFRONT, CURTAINWALL AND ENTRANCE SYSTEMS

3056 WALKER RIDGE DRIVE N.W.
WALKER, MICHIGAN 49544
PH: 800.866.2227
FX: 616.301.0008
WEB SITE: WWW.TUBELITEINC.COM

REVISIONS			
NO.	DATED	BY	DESCRIPTION
-	-	-	-

DATED	LATEST RELEASE
11-11-13	7-30-14

DRAWINGS BY: HLP
ENGINEERED BY:

Sheet 11/21

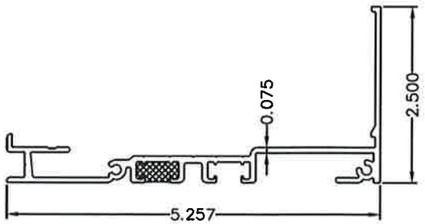

ITEM 1–T34259
SUB SILL

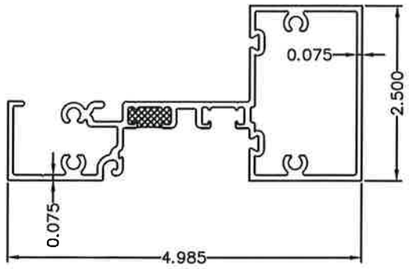

ITEM 2–T34143
INTERMEDIATE HORIZONTAL/SILL

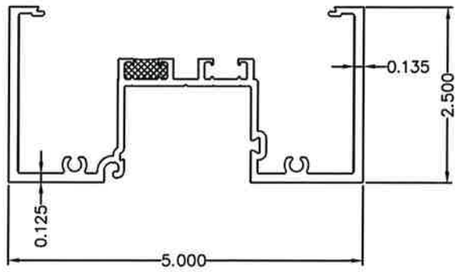

ITEM 3–T34441
VERTICAL/HEAD

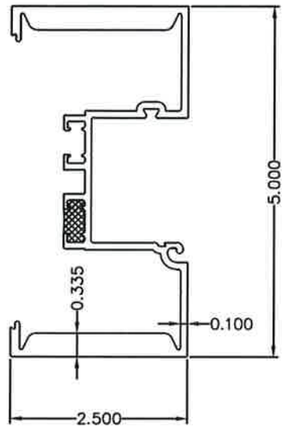

ITEM 4–T34261
HD VERTICAL

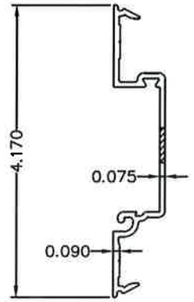

ITEM 5–T34445
SHALLOW POCKET FILLER

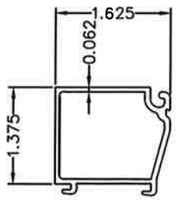

ITEM 8–E34104
GLASS STOP SILL/HORIZONTAL

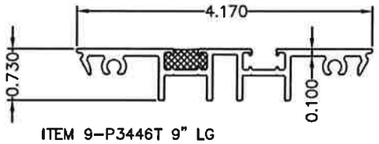

ITEM 9–P3446T 9" LG
(T34442) FILLER FOR STANDARD ANCHORING

ITEM 10–P3445T 3" LG
(T34442) FILLER FOR STANDARD ANCHORING

STATE OF TEXAS
JOSEPH A. REED
100777
LICENSED
PROFESSIONAL ENGINEER
9/10/15

TUBELITE FORCEFRONT HURRICANE IMPACT T34000 STOREFRONT

TUBELITE®
DEPENDABLE
LEADERS IN ECO-EFFICIENT STOREFRONT, CURTAINWALL AND ENTRANCE SYSTEMS

3056 WALKER RIDGE DRIVE N.W.
WALKER, MICHIGAN 49544
PH: 800.866.2227
FX: 616.301.0008
WEB SITE: WWW.TUBELITEINC.COM

REVISIONS			
NO.	DATED	BY	DESCRIPTION
-	-	-	-

DATED	LATEST RELEASE
11–11–13	7–30–14

DRAWINGS BY: HLP
ENGINEERED BY:

Sheet 12/21

HURRICANE STOREFRONT TEST SPECIMEN – PARTS LIST				MATERIAL
ITEM	QTY	PART NUMBER	DESCRIPTION	
1	1	T34259	EXTRUSION ~ SUB SILL	ALUMINUM–6063–T6
2	6	T34143	EXTRUSION ~ INTERMEDIATE HORIZONTAL/SILL	ALUMINUM–6063–T6
3	7	T34441	EXTRUSION ~ VERTICAL/HEAD	ALUMINUM–6063–T6
4	4	T34261	EXTRUSION ~ HD VERTICAL	ALUMINUM–6063–T6
5	4	T34445	EXTRUSION ~ SHALLOW POCKET FILLER	ALUMINUM–6063–T6
6				
7				
8	6	E34104	EXTRUSION ~ GLASS STOP SILL/HORIZONTAL	ALUMINUM–6063–T5
9	10	P3446T	EXTRUSION ~ SNAP IN FILLER (T34442)	ALUMINUM–6063–T6
10	2	P3445T	EXTRUSION ~ SNAP IN FILLER (T34442)	ALUMINUM–6063–T6
11				
12				
13				
14				
15				
16				
17				
18				
19				
20				
21				
22				
23				
24				
25				
26				
27				
28				
29				
30				
31				
32	4 @ 10'–0"	P3443	PERIMETER CAULK BACKER – FLAT LEG SNAP IN FILLER	P–PART–RIGID PVC
33	7	P1916	W ANTI–WALK BLOCK	P–PART–EPDM
34	150'	P6503	TOP LOAD WEDGE GASKET, GLASS, EPG	P–PART–RUBBER
35				
36				
37	150'	P6586	PRESET WEDGE GASKET, GLASS, EPG	P–PART–RUBBER
38	12	P6541	SETTING BLOCK 3/4 x 1 3/4 x 4" LG	P–PART–RUBBER
39				
40				
41	2	P6581	WATER DIVERTER	P–PART–PVC
42	2	P1156	END DAM FOR SUB SILL	P–PART–ALUM .040 SHT.
43				
44				
45				
46				
47				
48				
49				
50				
51				
52				
53				
54				
55				
56				
57				
58				
59				

ITEM	QTY	PART NUMBER	DESCRIPTION	MATERIAL
60	18	BY OTHERS	SCREW ~ 5/16"–18 x 2" HEX HD MS SS W/FWS (FR. TO STEEL BUCK)	P–PART–FASTENER
61	22	BY OTHERS	SCREW ~ 5/16"–18 x 2 1/2" FH MS SS (FR. TO STEEL BUCK)	P–PART–FASTENER
62	20	S206	SCREW ~ #10–24 x 1/2" P PH TYPE 23 ST (SILL TO SUB SILL)	P–PART–FASTENER
63				
64				
65				
66				
67	88	S419	SCREW ~ #12–14 x 1 1/2" HWH SD #3PT (FRAME TO FRAME)	P–PART–FASTENER
68	4	S196	SCREW ~ #8 X 3/8" SELF TAPPING PAN HEAD (END DAM TO SUB SILL)	P–PART–FASTENER
69				
70				
71				
72				
73				
74	AS REQ'D	BY OTHERS	SILICONE SEALANT DOW 795	P–PART–SEALANT
75				
76				
77				
78				
79				
80				
81				
82				
83				
84				
85				
86				
87				
88				
89				
90				
91				
92				
93				
94				
95				
96				
97				
98				
99	AS REQ'D	BY OTHERS	3/8" Hilti KB–3 1–3/4" Spacing, 2" Embed, 5" Edge Dist.	Alternate Anchor
100				
101				
102				
103				

TUBELITE
FORCEFRONT
HURRICANE IMPACT
T34000 STOREFRONT

TUBELITE®
DEPENDABLE
LEADERS IN ECO-EFFICIENT STOREFRONT, CURTAINWALL AND ENTRANCE SYSTEMS
3056 WALKER RIDGE DRIVE N.W.
WALKER, MICHIGAN 49544
PH: 800.866.2227
FX: 616.301.0008
WEB SITE: WWW.TUBELITEINC.COM

REVISIONS			
NO.	DATED	BY	DESCRIPTION
–	–	–	–

DATED	LATEST RELEASE
11–11–13	7–30–14

DRAWINGS BY: HLP
ENGINEERED BY:

STATE OF TEXAS
JOSEPH A. REED
100777
LICENSED
PROFESSIONAL ENGINEER
9/10/15

Sheet 13/21

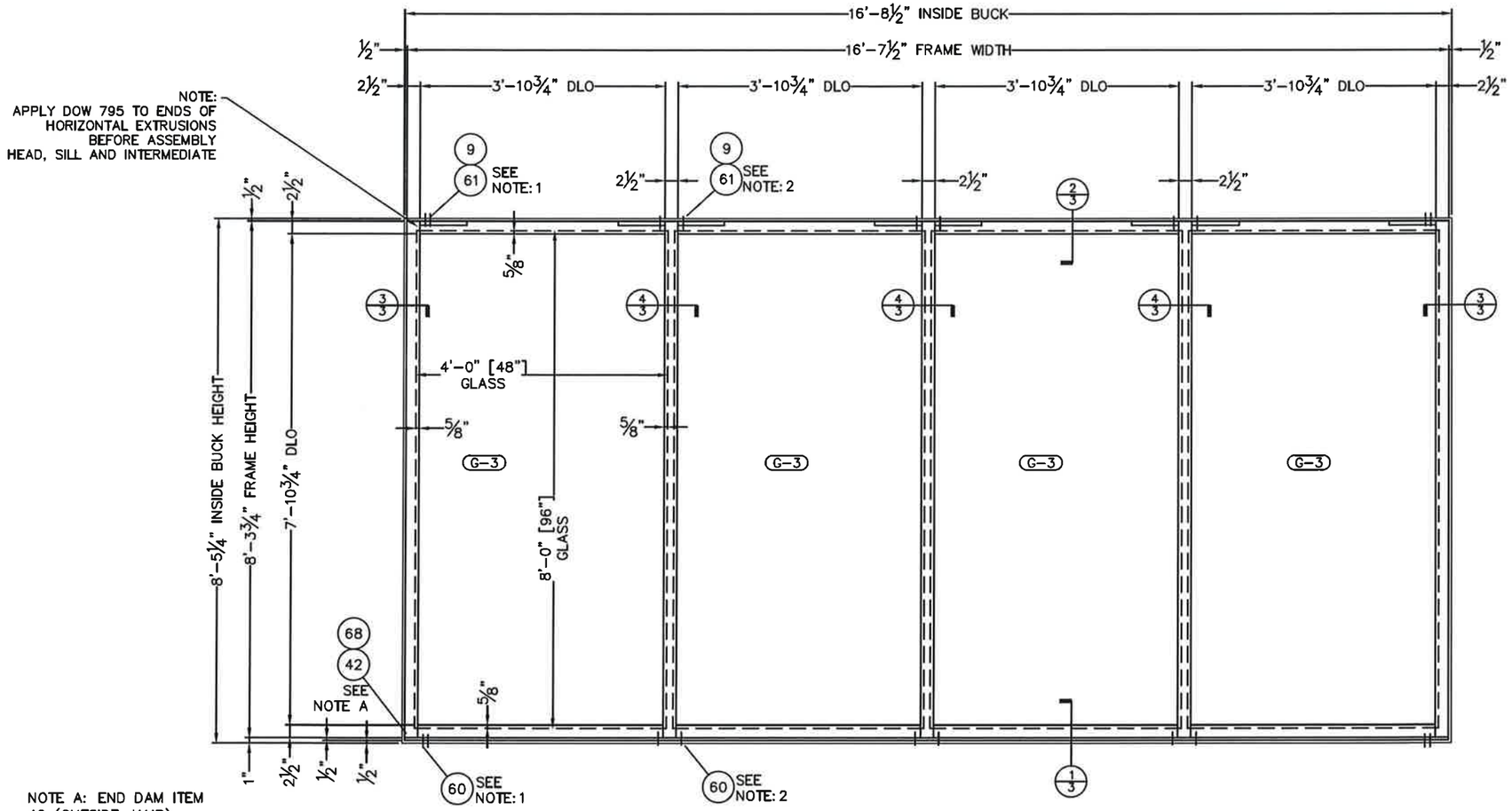

NOTE A: END DAM ITEM
42 (OUTSIDE JAMB)
ATTACHED W/(2) ITEM 68

T34000 STOREFRONT

HURRICANE IMPACT ±50 PSF
THERMAL EXTRUSIONS, STANDARD MULLION
WET GLAZED
COMMON ANCHORS

NOTE 1: (2) FASTENERS REQ'D AS MARKED.
1" FROM SIDE OF MULLION & 2" CEN TO CEN
TYPICAL @ JAMB MULLION.

NOTE 2: (2) FASTENERS REQ'D AS MARKED.
2" FROM SIDE OF MULLION
(1) EA SIDE OF TYPICAL MULLIONS.

STATE OF TEXAS
JOSEPH A. REED
100777
LICENSED
PROFESSIONAL ENGINEER
8/14/15

GLAZING TYPES

TAG	DESCRIPTION
G-3	1 5/16" THK INSULATED GLASS -1/4" CLEAR, TEMPERED -1/2" AIRSPACE -1/4" CLEAR, HEAT STRENGTHENED -.090 DUPONT BUTACITE PVB -1/4" CLEAR, HEAT STRENGTHENED

TUBELITE
FORCEFRONT
HURRICANE IMPACT
T34000 STOREFRONT

TUBELITE® DEPENDABLE
LEADERS IN ECO-EFFICIENT STOREFRONT, CURTAINWALL AND ENTRANCE SYSTEMS

3056 WALKER RIDGE DRIVE N.W.
WALKER, MICHIGAN 49544
PH: 800.866.2227
FX: 616.301.0008
WEB SITE: WWW.TUBELITEINC.COM

REVISIONS			
NO.	DATED	BY	DESCRIPTION
-	-	-	-

DATED	LATEST RELEASE
11-11-13	7-30-14

DRAWINGS BY: HLP
ENGINEERED BY:

Sheet 14/21

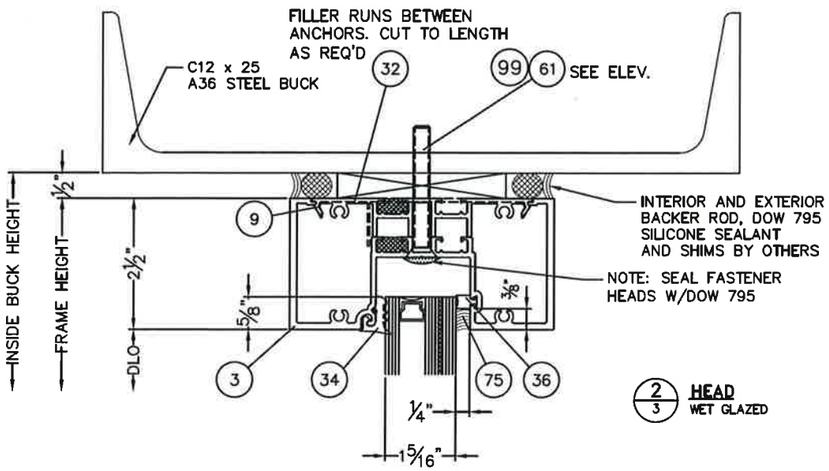

2/3 HEAD
WET GLAZED

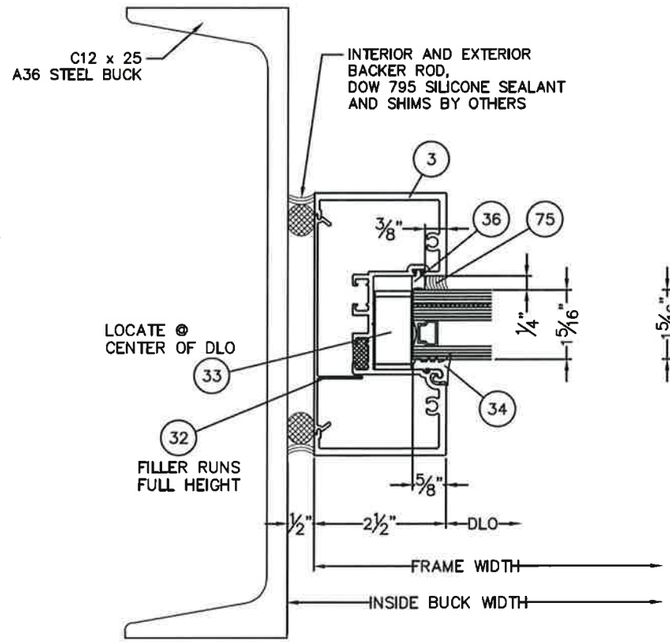

3/3 JAMB MULLION
WET GLAZED

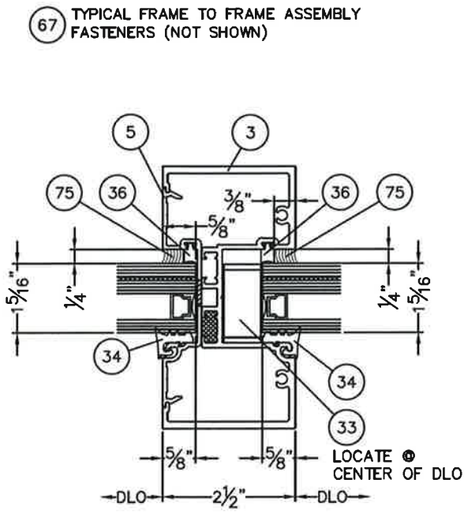

4/3 HD MULLION
WET GLAZED

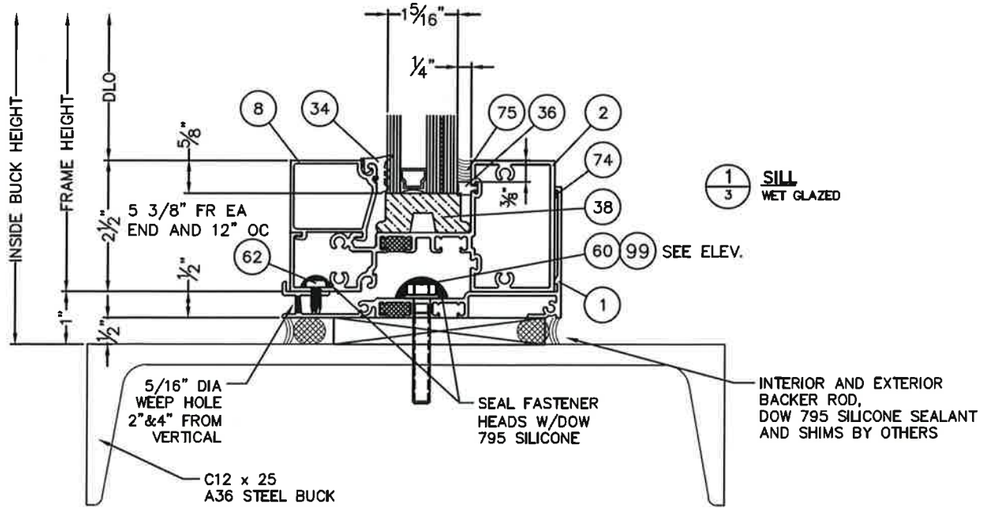

1/3 SILL
WET GLAZED

STATE OF TEXAS
JOSEPH A. REED
100777
LICENSED
PROFESSIONAL ENGINEER
9/10/15

TUBELITE
FORCEFRONT
HURRICANE IMPACT
T34000 STOREFRONT

TUBELITE®
DEPENDABLE
LEADERS IN ECO-EFFICIENT STOREFRONT, CURTAINWALL AND ENTRANCE SYSTEMS

3056 WALKER RIDGE DRIVE N.W.
WALKER, MICHIGAN 49544
PH: 800.866.2227
FX: 616.301.0008
WEB SITE: WWW.TUBELITEINC.COM

REVISIONS	NO.	DATED	BY	DESCRIPTION
	-	-	-	-

DATED	LATEST RELEASE
11-11-13	7-30-14

DRAWINGS BY: HLP
ENGINEERED BY:

Sheet 15/21

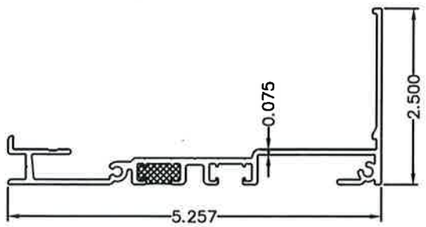

ITEM 1–T34259
SUB SILL

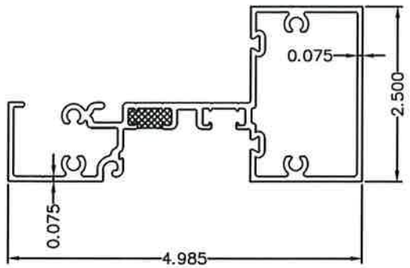

ITEM 2–T34143
INTERMEDIATE HORIZONTAL/SILL

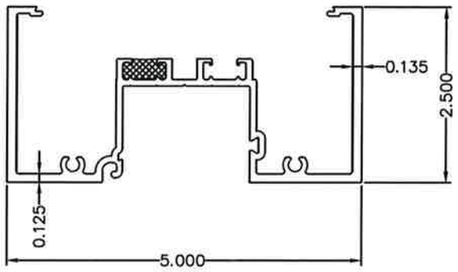

ITEM 3–T34441
VERTICAL/HEAD

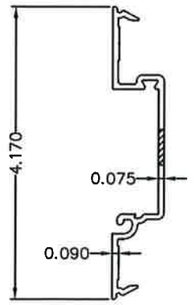

ITEM 5–T34445
SHALLOW POCKET FILLER

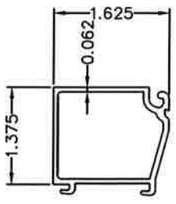

ITEM 8–E34104
GLASS STOP SILL/HORIZONTAL

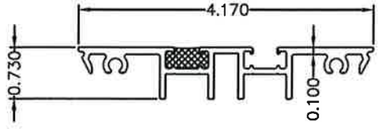

ITEM 9–P3446T 9" LG
(T34442) FILLER FOR STANDARD ANCHORING

TUBELITE FORCEFRONT HURRICANE IMPACT T34000 STOREFRONT

TUBELITE
DEPENDABLE
LEADERS IN ECO-EFFICIENT STOREFRONT, CURTAINWALL AND ENTRANCE SYSTEMS

3056 WALKER RIDGE DRIVE N.W.
WALKER, MICHIGAN 49544
PH: 800.866.2227
FX: 616.301.0008
WEB SITE: WWW.TUBELITEINC.COM

REVISIONS			
NO.	DATED	BY	DESCRIPTION
-	-	-	-

DATED	LATEST RELEASE
11–11–13	7–30–14

DRAWINGS BY: HLP
ENGINEERED BY:

Sheet 16/21

HURRICANE STOREFRONT TEST SPECIMEN – PARTS LIST				MATERIAL
ITEM	QTY	PART NUMBER	DESCRIPTION	
1	1	T34259	EXTRUSION ~ SUB SILL	ALUMINUM–6063–T6
2	4	T34143	EXTRUSION ~ INTERMEDIATE HORIZONTAL/SILL	ALUMINUM–6063–T6
3	9	T34441	EXTRUSION ~ VERTICAL/HEAD	ALUMINUM–6063–T6
4				
5	3	T34445	EXTRUSION ~ SHALLOW POCKET FILLER	ALUMINUM–6063–T6
6				
7				
8	4	E34104	EXTRUSION ~ GLASS STOP SILL/HORIZONTAL	ALUMINUM–6063–T5
9	8	P3446T	EXTRUSION ~ SNAP IN FILLER (T34442)	ALUMINUM–6063–T6
10				
11				
12				
13				
14				
15				
16				
17				
18				
19				
20				
21				
22				
23				
24				
25				
26				
27				
28				
29				
30				
31				
32	3 @ 10'–0"	P3443	PERIMETER CAULK BACKER – FLAT LEG SNAP IN FILLER	P–PART–RIGID PVC
33	5	P1916	W ANTI–WALK BLOCK	P–PART–EPDM
34	105'	P6503	TOP LOAD WEDGE GASKET, GLASS, EPG	P–PART–RUBBER
35				
36	105'	P6587	WET GLAZE GASKET, GLASS, EPG	P–PART–RUBBER
37				
38	8	P6541	SETTING BLOCK 3/4 x 1 3/4 x 4" LG	P–PART–RUBBER
39				
40				
41				
42	2	P1156	END DAM FOR SUB SILL	P–PART–ALUM .040 SHT.
43				
44				
45				
46				
47				
48				
49				
50				
51				
52				
53				
54				
55				
56				
57				
58				
59				

ITEM	QTY	PART NUMBER	DESCRIPTION	MATERIAL
60	10	BY OTHERS	SCREW ~ 5/16"–18 x 2" HEX HD MS SS W/FWS (FR. TO STEEL BUCK)	P–PART–FASTENER
61	10	BY OTHERS	SCREW ~ 5/16"–18 x 2 1/2" FH MS SS (FR. TO STEEL BUCK)	P–PART–FASTENER
62	16	S206	SCREW ~ #10–24 x 1/2" P PH TYPE 23 ST (SILL TO SUB SILL)	P–PART–FASTENER
63				
64				
65				
66				
67	64	S419	SCREW ~ #12–14 x 1 1/2" HWH SD #3PT (FRAME TO FRAME)	P–PART–FASTENER
68	4	S196	SCREW ~ #8 X 3/8" SELF TAPPING PAN HEAD (END DAM TO SUB SILL)	P–PART–FASTENER
69				
70				
71				
72				
73				
74	AS REQ'D	BY OTHERS	SILICONE SEALANT DOW 795	P–PART–SEALANT
75	AS REQ'D	BY OTHERS	SILICONE SEALANT DOW 995	P–PART–SEALANT
76				
77				
78				
79				
80				
81				
82				
83				
84				
85				
86				
87				
88				
89				
90				
91				
92				
93				
94				
95				
96				
97				
98				
99	AS REQ'D	BY OTHERS	3/8" Hilti KB–3 1–3/4" Spacing, 2" Embed, 5" Edge Dist.	Alternate Anchor
100				
101				
102				
103				

STATE OF TEXAS
JOSEPH A. REED
100777
LICENSED
PROFESSIONAL ENGINEER
9/10/15

TUBELITE
FORCEFRONT
HURRICANE IMPACT
T34000 STOREFRONT

TUBELITE®
DEPENDABLE
LEADERS IN ECO-EFFICIENT STOREFRONT, CURTAINWALL AND ENTRANCE SYSTEMS

3056 WALKER RIDGE DRIVE N.W.
WALKER, MICHIGAN 49544
PH: 800.866.2227
FX: 616.301.0008
WEB SITE: WWW.TUBELITEINC.COM

REVISIONS			
NO.	DATED	BY	DESCRIPTION
–	–	–	–

DATED	LATEST RELEASE
11–11–13	7–30–14

DRAWINGS BY: HLP
ENGINEERED BY:

Sheet 17/21

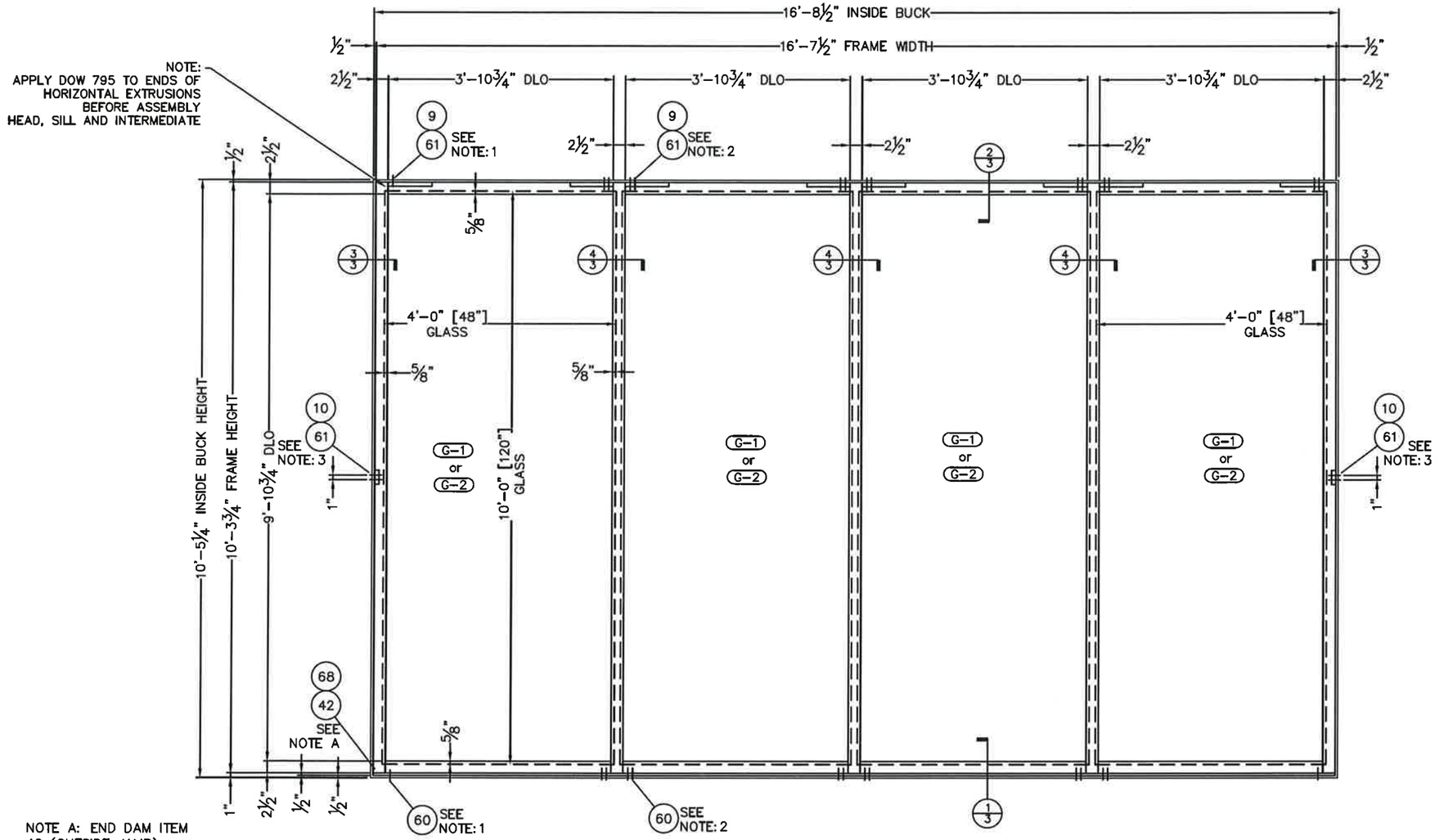

NOTE A: END DAM ITEM 42 (OUTSIDE JAMB) ATTACHED W/(2) ITEM 68

T34000 STOREFRONT

HURRICANE IMPACT +60/-60 PSF
THERMAL EXTRUSIONS, HEAVY DUTY MULLION
DRY GLAZED
COMMON ANCHORS

NOTE 1: (1) FASTENER REQ'D AS MARKED. 1" FROM SIDE OF JAMB MULLION & 2" CEN TO CEN.

NOTE 2: (4) FASTENERS REQ'D AS MARKED. 1" FROM SIDE OF MULLION & 2" CEN TO CEN (2) EA SIDE OF TYPICAL MULLIONS.

NOTE 3: LOCATE ITEM 10 @ MIDSPAN (2) FASTENERS REQ'D AS MARKED. 2" CEN TO CEN.

GLAZING TYPES

TAG	DESCRIPTION
G-1	1 5/16" THK INSULATED GLASS -1/4" CLEAR, TEMPERED -1/2" AIRSPACE -1/4" CLEAR, HEAT STRENGTHENED -0.077 SOLUTIA VS-02 -1/4" CLEAR, HEAT STRENGTHENED
G-2	1 5/16" THK INSULATED GLASS -1/4" CLEAR, TEMPERED -1/2" AIRSPACE -1/4" CLEAR, HEAT STRENGTHENED -0.090" DUPONT SENTRY GLAS PLUS -1/4" CLEAR, HEAT STRENGTHENED

STATE OF TEXAS
JOSEPH A. REED
100777
LICENSED
PROFESSIONAL ENGINEER

TUBELITE FORCEFRONT HURRICANE IMPACT T34000 STOREFRONT

TUBELITE
DEPENDABLE
LEADERS IN ECO-EFFICIENT STOREFRONT, CURTAINWALL AND ENTRANCE SYSTEMS
3056 WALKER RIDGE DRIVE N.W.
WALKER, MICHIGAN 49544
PH: 800.866.2227
FX: 616.301.0008
WEB SITE: WWW.TUBELITEINC.COM

REVISIONS			
NO.	DATED	BY	DESCRIPTION
-	-	-	-

DATED	LATEST RELEASE
11-11-13	7-30-14

DRAWINGS BY: HLP
ENGINEERED BY:

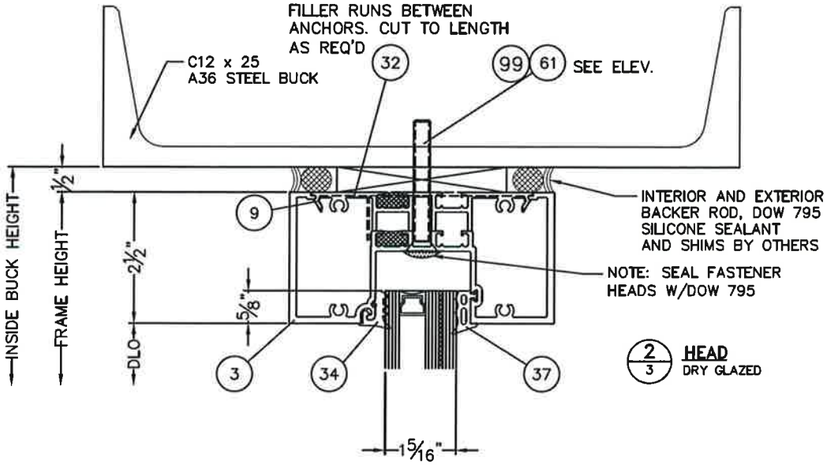

2/3 HEAD
DRY GLAZED

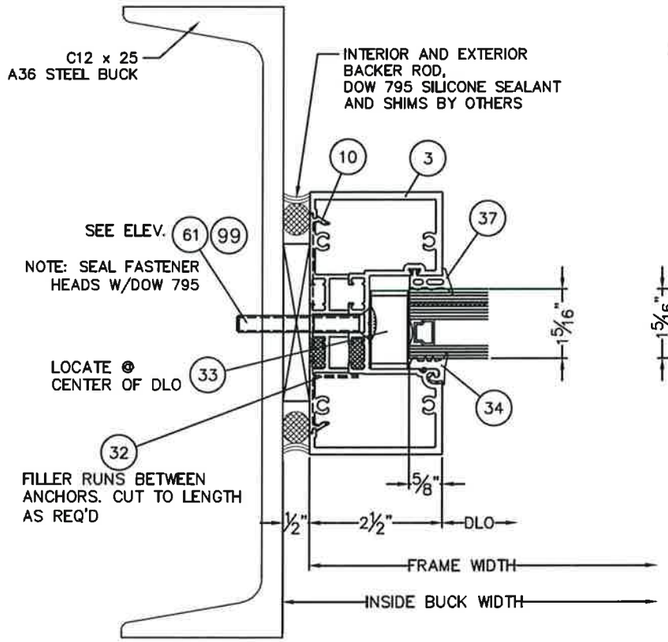

3/3 JAMB MULLION
DRY GLAZED

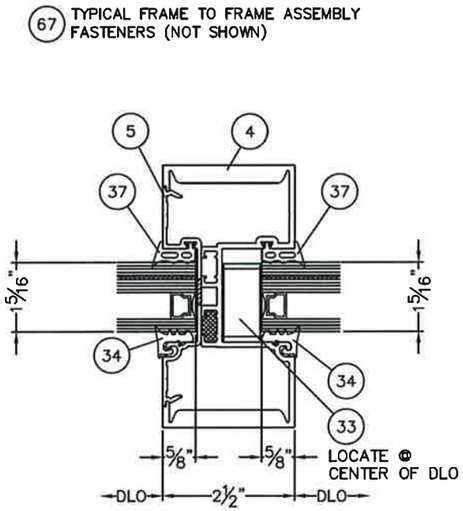

4/3 HD MULLION
DRY GLAZED

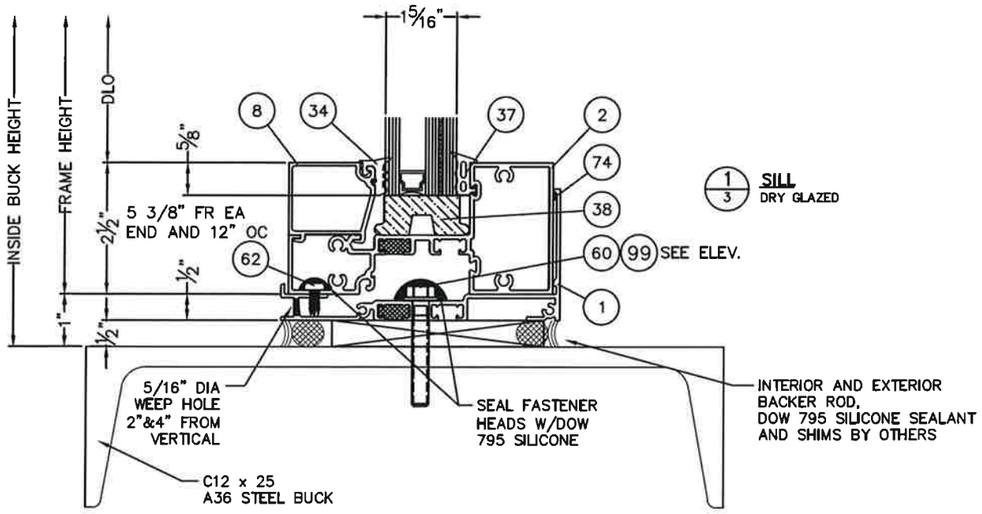

1/3 SILL
DRY GLAZED

STATE OF TEXAS
JOSEPH A. REED
100777
LICENSED PROFESSIONAL ENGINEER
8/10/15

TUBELITE
FORCEFRONT
HURRICANE IMPACT
T34000 STOREFRONT

TUBELITE®
DEPENDABLE
LEADERS IN ECO-EFFICIENT STOREFRONT, CURTAINWALL AND ENTRANCE SYSTEMS

3056 WALKER RIDGE DRIVE N.W.
WALKER, MICHIGAN 49544
PH: 800.866.2227
FX: 616.301.0008
WEB SITE: WWW.TUBELITEINC.COM

REVISIONS			
NO.	DATED	BY	DESCRIPTION
-	-	-	-

DATED	LATEST RELEASE
11-11-13	7-30-14

DRAWINGS BY: HLP
ENGINEERED BY:

Sheet 19/21

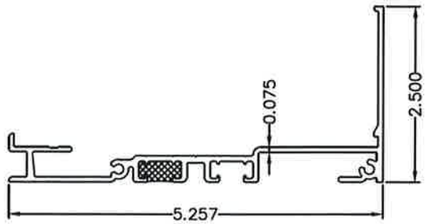

ITEM 1–T34259
SUB SILL

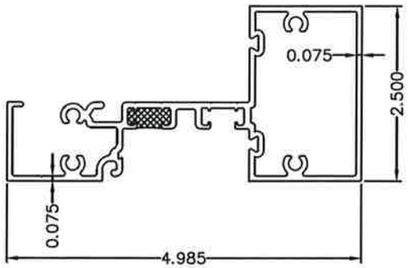

ITEM 2–T34143
INTERMEDIATE HORIZONTAL/SILL

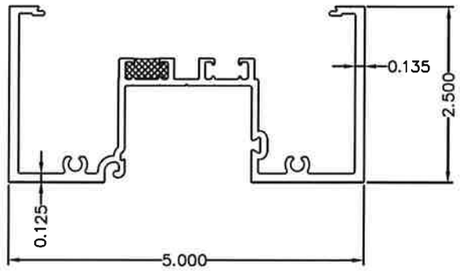

ITEM 3–T34441
VERTICAL/HEAD

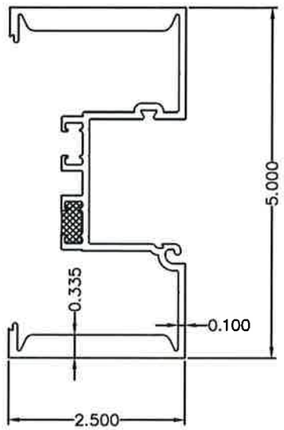

ITEM 4–T34261
HD VERTICAL

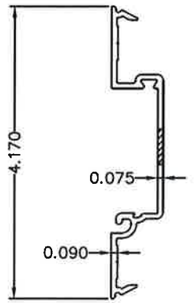

ITEM 5–T34445
SHALLOW POCKET FILLER

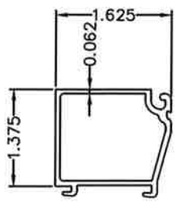

ITEM 8–E34104
GLASS STOP SILL/HORIZONTAL

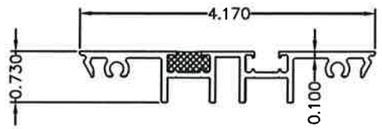

ITEM 9–P3446T 9" LG
(T34442) FILLER FOR STANDARD ANCHORING

ITEM 10–P3445T 3" LG
(T34442) FILLER FOR STANDARD ANCHORING

STATE OF TEXAS
JOSEPH A. REED
100777
LICENSED
PROFESSIONAL ENGINEER
9/16/15

TUBELITE
FORCEFRONT
HURRICANE IMPACT
T34000 STOREFRONT

TUBELITE®
DEPENDABLE
LEADERS IN ECO-EFFICIENT STOREFRONT, CURTAINWALL AND ENTRANCE SYSTEMS

3056 WALKER RIDGE DRIVE N.W.
WALKER, MICHIGAN 49544
PH: 800.866.2227
FX: 616.301.0008
WEB SITE: WWW.TUBELITEINC.COM

REVISIONS			
NO.	DATED	BY	DESCRIPTION
-	-	-	-

DATED	LATEST RELEASE
11–11–13	7–30–14

DRAWINGS BY: HLP
ENGINEERED BY:

Sheet 20/21

HURRICANE STOREFRONT TEST SPECIMEN – PARTS LIST				MATERIAL
ITEM	QTY	PART NUMBER	DESCRIPTION	
1	1	T34259	EXTRUSION ~ SUB SILL	ALUMINUM–6063–T6
2	4	T34143	EXTRUSION ~ INTERMEDIATE HORIZONTAL/SILL	ALUMINUM–6063–T6
3	6	T34441	EXTRUSION ~ VERTICAL/HEAD	ALUMINUM–6063–T6
4	3	T34261	EXTRUSION ~ HD VERTICAL	ALUMINUM–6063–T6
5	3	T34445	EXTRUSION ~ SHALLOW POCKET FILLER	ALUMINUM–6063–T6
6				
7				
8	4	E34104	EXTRUSION ~ GLASS STOP SILL/HORIZONTAL	ALUMINUM–6063–T5
9	8	P3446T	EXTRUSION ~ SNAP IN FILLER (T34442)	ALUMINUM–6063–T6
10	2	P3445T	EXTRUSION ~ SNAP IN FILLER (T34442)	ALUMINUM–6063–T6
11				
12				
13				
14				
15				
16				
17				
18				
19				
20				
21				
22				
23				
24				
25				
26				
27				
28				
29				
30				
31				
32	3 @ 10'–0"	P3443	PERIMETER CAULK BACKER – FLAT LEG SNAP IN FILLER	P–PART–RIGID PVC
33	5	P1916	W ANTI–WALK BLOCK	P–PART–EPDM
34	115'	P6503	TOP LOAD WEDGE GASKET, GLASS, EPG	P–PART–RUBBER
35				
36				
37	115'	P6586	PRESET WEDGE GASKET, GLASS, EPG	P–PART–RUBBER
38	8	P6541	SETTING BLOCK 3/4 x 1 3/4 x 4" LG	P–PART–RUBBER
39				
40				
41				
42	2	P1156	END DAM FOR SUB SILL	P–PART–ALUM .040 SHT.
43				
44				
45				
46				
47				
48				
49				
50				
51				
52				
53				
54				
55				
56				
57				
58				
59				

ITEM	QTY	PART NUMBER	DESCRIPTION	MATERIAL
60	14	BY OTHERS	SCREW ~ 5/16"–18 x 2" HEX HD MS SS W/FWS (FR. TO STEEL BUCK)	P–PART–FASTENER
61	10	BY OTHERS	SCREW ~ 5/16"–18 x 2 1/2" FH MS SS (FR. TO STEEL BUCK)	P–PART–FASTENER
62	16	S206	SCREW ~ #10–24 x 1/2" P PH TYPE 23 ST (SILL TO SUB SILL)	P–PART–FASTENER
63				
64				
65				
66				
67	64	S419	SCREW ~ #12–14 x 1 1/2" HWH SD #3PT (FRAME TO FRAME)	P–PART–FASTENER
68	4	S196	SCREW ~ #8 X 3/8" SELF TAPPING PAN HEAD (END DAM TO SUB SILL)	P–PART–FASTENER
69				
70				
71				
72				
73				
74	AS REQ'D	BY OTHERS	SILICONE SEALANT DOW 795	P–PART–SEALANT
75				
76				
77				
78				
79				
80				
81				
82				
83				
84				
85				
86				
87				
88				
89				
90				
91				
92				
93				
94				
95				
96				
97				
98				
99	AS REQ'D	BY OTHERS	3/8" Hilti KB–3 1–3/4" Spacing, 2" Embed, 5" Edge Dist.	Alternate Anchor
100				
101				
102				
103				

STATE OF TEXAS
JOSEPH A. REED
100777
LICENSED
PROFESSIONAL ENGINEER
9/10/15

TUBELITE FORCEFRONT HURRICANE IMPACT T34000 STOREFRONT

TUBELITE®
DEPENDABLE
LEADERS IN ECO-EFFICIENT STOREFRONT, CURTAINWALL AND ENTRANCE SYSTEMS

3056 WALKER RIDGE DRIVE N.W.
WALKER, MICHIGAN 49544
PH: 800.866.2227
FX: 616.301.0008
WEB SITE: WWW.TUBELITEINC.COM

REVISIONS

NO.	DATED	BY	DESCRIPTION
-	-	-	-

DATED	LATEST RELEASE
11–11–13	7–30–14

DRAWINGS BY: HLP
ENGINEERED BY:

Sheet 21/21