GENERAL NOTES:

1. THESE CURTAIN WALL SYSTEMS HAVE BEEN TESTED, ANALYZED & APPROVED FOR DESIGN PRESSURES NOT TO EXCEED THOSE SHOWN IN THE "ALLOWABLE DESIGN PRESSURE TABLE(S).
2. OPENINGS, BUCKING & BUCKING FASTENERS MUST BE PROPERLY DESIGNED & INSTALLED TO TRANSFER WIND LOADS TO THE STRUCTURE.
3. ALL HARDWARE & FASTENERS SHALL BE IN ACCORDANCE WITH THESE DRAWINGS & SHALL NOT VARY UNLESS SPECIFICALLY MENTIONED ON THE DRAWINGS. SPECIFIED ANCHOR EMBED TO BASE MATERIAL SHALL BE BEYOND WALL FINISH OR STUCCO.
4. THE DETAILS & SPECIFICATIONS SHOWN HEREIN REPRESENT THE PRODUCTS TESTED & PROPOSED FOR WATER, AIR, IMPACT, CYCLIC & UNIFORM STATIC AIR PRESSURE TESTING IN CONFORMANCE WITH ASTM E330, E283, E331, E1886 & E1996 FOR LARGE MISSILE IMPACT CURTAIN WALL SYSTEMS.
5. THESE CURTAIN WALL SYSTEMS HAVE BEEN DESIGNED IN ACCORDANCE WITH AND MEET THE REQUIREMENTS OF THE INTERNATIONAL BUILDING CODE (IBC).
6. IMPACT SHUTTERS ARE NOT REQUIRED WITH THIS CURTAIN WALL SYSTEM.
7. ALL ANCHORS SECURING CURTAIN WALL FRAME TO PRESSURE TREATED BUCKS OR WOOD FRAMING SHALL BE CAPABLE OF RESISTING CORROSION CAUSED BY THE PRESSURE TREATING CHEMICALS IN THE WOOD.
8. DETERMINE THE POSITIVE & NEGATIVE DESIGN LOADS TO USE WHEN REFERENCING THESE DOCUMENTS IN ACCORDANCE WITH THE GOVERNING CODE AND GOVERNING WIND VELOCITY. FOR WIND LOAD CALCULATIONS IN ACCORDANCE WITH THE INTERNATIONAL BUILDING CODE, A DIRECTIONALITY FACTOR OF KD = 0.85 MAY BE APPLIED PER THE ASCE-7 STANDARD.
9. NO INCREASE IN ALLOWABLE STRESS HAS BEEN USED IN THE CERTIFICATION OF THIS PRODUCT. WIND LOAD DURATION FACTOR CD = 1.6 WAS USED FOR WOOD SCREW ANALYSIS ONLY.
10. MATERIALS, INCLUDING BUT NOT LIMITED TO STEEL SCREWS, THAT COME INTO CONTACT WITH OTHER DISSIMILAR MATERIALS SHALL BE SEPARATED OR COATED AS REQUIRED TO AVOID CORROSION OF EITHER MATERIAL.
11. THERE SHALL BE NO LIMIT TO THE NUMBER OF HORIZONTAL & VERTICAL PANELS USED FOR ANY JOB PROVIDING ALL RESTRICTIONS ARE MET PER THE ELEVATIONS.
12. TO THE BEST OF OUR KNOWLEDGE, THE CURTAIN WALL SYSTEMS SHOWN HEREIN ARE QUALITY ASSURED BY AN APPROVED CERTIFICATION/QA ENTITY & SHALL BE LABELED IN ACCORDANCE WITH APPLICABLE STANDARDS. THESE DRAWINGS SHOW ALL APPLICABLE ELEVATION, COMBINATION, INSTALLATION & COMPARATIVE ANALYSIS CONDITIONS AS DETERMINED THROUGH TESTING & ENGINEERING RATIONAL ANALYSIS. CURTAIN WALL ASSEMBLY SHALL BE IN ACCORDANCE WITH THESE DRAWINGS, THE MANUFACTURER'S QUALITY ASSURANCE SPECIFICATIONS & TESTING REPORTS.
13. CERTIFICATION OF THESE CURTAIN WALL SYSTEMS SHALL BE CONSIDERED VOID IF THEY ARE INSTALLED WITHOUT A BUILDING PERMIT FROM THE APPLICABLE LOCAL BUILDING DEPARTMENT OR IF THEY ARE INSTALLED BY ANYONE OTHER THAN A LICENSED CONTRACTOR EXPERIENCED WITH CURTAIN WALL INSTALLATIONS.

DRAWING USE INSTRUCTIONS:

1. DETERMINE IF THE WALL SYSTEM IS TO BE A MULTI-SPAN, REINFORCED SINGLE SPAN, OR NON-REINFORCED SINGLE SPAN CONDITION. IF MULTI-SPAN, ALL CONDITIONS SHOWN ON SHEETS 2 & 3 SHALL APPLY. IF A REINFORCED SINGLE SPAN, ALL CONDITIONS SHOWN ON SHEET 4 SHALL APPLY. IF A NON-REINFORCED SINGLE SPAN, ALL CONDITIONS SHOWN ON SHEET 5 SHALL APPLY.
2. CONDITIONS MAY NOT BE MIXED BETWEEN WALL SYSTEM TYPES.
3. ALLOWABLE GLASS PRESSURE SHALL BE CONSIDERED WITH ALL WALL CONDITIONS AND SHALL CONTROL IF LESS THAN THOSE ALLOWABLE PRESSURES STATED FOR THE APPLICABLE FRAMING SYSTEM.

FREE SPANNING JAMB PERIMETER SEALANT NOTE (APPLICABLE TO ELEVATION ON SHEET 5):
WHEN THERE IS NO CONTINUOUS JAMB SUPPORT, THE MINIMUM & MAXIMUM ALLOWABLE SPACE BETWEEN JAMB FRAME MEMBERS & THE OPENING SUBSTRATE OR FINISHES SHALL BE SPECIFIED BY THE ENGINEER OR ARCHITECT OF RECORD FOR EACH JOB BUT SHALL NOT BE LESS THAN 1/2" NOR GREATER THAN 1 3/8". WHEN CONSIDERING TYPE, DEPTH & JOINT SPAN OF SEALANT, THE ENGINEER/ARCHITECT SHALL TAKE INTO CONSIDERATION THE DEFLECTION OF THE JAMB MEMBER THAT WOULD OCCUR WHILE SUPPORTING THE JOB REQUIRED DESIGN WIND PRESSURE. ALSO TO BE CONSIDERED SHALL BE THE MATERIALS & SURFACES TO WHICH THE SEALANT WILL BE APPLIED.

CORNER CONSTRUCTION:

STANDARD FRAMING AT TOP & BOTTOM HORIZONTAL MEMBERS: VERTICAL MEMBERS RUN THROUGH WHILE THE HORIZONTAL MEMBERS ARE SQUARE CUT, BUTTED AND MECHANICALLY FASTENED TO THE VERTICAL MEMBERS VIA A SHEAR BLOCK (ITEM #14). THE SHEAR BLOCK IS MECHANICALLY FASTENED TO THE VERTICAL FRAME MEMBER WITH 2 NO. 12 X 1 7/8" FHTF SCREWS. THE HORIZONTAL FRAME MEMBERS ARE ATTACHED TO THE SHEAR BLOCK WITH 2 NO. 12 X 7/8" PHTF SCREWS. CORNERS ARE SEALED WITH DOW 795 SILICONE SEALANT.

STANDARD FRAMING AT INTERMEDIATE HORIZONTAL MEMBERS: HORIZONTAL MEMBERS ARE SQUARE CUT, BUTTED AND MECHANICALLY FASTENED TO THE VERTICAL FRAME MEMBERS VIA A SHEAR BLOCK (ITEM #16). THE SHEAR BLOCK IS MECHANICALLY FASTENED TO THE VERTICAL FRAME MEMBER WITH 2 NO. 12 X 1 7/8" FHTF SCREWS. THE INTERMEDIATE HORIZONTAL FRAME MEMBERS ARE ATTACHED TO THE SHEAR BLOCK WITH 2 NO. 12 X 7/8" FHTF SCREWS. CORNERS ARE SEALED WITH DOW 795 SILICONE SEALANT.

TYPICAL 90 DEGREE CORNER FRAMING: VERTICAL CORNER MEMBERS RUN THROUGH WHILE THE HORIZONTAL MEMBERS ARE MITER CUT, BUTTED AND MECHANICALLY FASTENED TO THE VERTICAL MEMBERS VIA A SHEAR BLOCK (ITEM #15). THE SHEAR BLOCK IS MECHANICALLY FASTENED TO THE VERTICAL CORNER FRAME MEMBERS WITH 3 NO. 12 X 7/16" PHTF SCREWS. THE HORIZONTAL FRAME MEMBERS ARE ATTACHED TO THE SHEAR BLOCK WITH 2 NO. 12 X 1/2" FHTF SCREWS. CORNERS ARE SEALED WITH DOW 795 SILICONE SEALANT.

90 DEGREE CORNER FRAMING AT SPLICE JOINT LOCATIONS: VERTICAL CORNER MEMBERS RUN THROUGH WHILE THE HORIZONTAL MEMBERS ARE MITER CUT, BUTTED AND MECHANICALLY FASTENED TO THE VERTICAL MEMBERS VIA A SHEAR BLOCK (ITEM #18). THE SHEAR BLOCK IS MECHANICALLY FASTENED TO THE VERTICAL CORNER FRAME MEMBERS WITH 2 NO. 12 X 7/16" PHTF SCREWS (2 PER SHEAR BLOCK). THE HORIZONTAL FRAME MEMBERS ARE ATTACHED TO THE SHEAR BLOCK WITH 2 NO. 12 X 1/2" FHTF SCREWS (2 PER SHEAR BLOCK). CORNERS ARE SEALED WITH DOW 795 SILICONE SEALANT.

STANDARD FRAMING AT SPLICE JOINT LOCATIONS: VERTICAL MEMBERS RUN THROUGH WHILE THE HORIZONTAL MEMBERS ARE SQUARE CUT, BUTTED AND MECHANICALLY FASTENED TO THE VERTICAL MEMBERS VIA A SHEAR BLOCK (ITEM #17). THE SHEAR BLOCK IS MECHANICALLY FASTENED TO THE VERTICAL CORNER FRAME MEMBERS WITH 2 NO. 12 X 1 7/8" PHTF SCREWS (2 PER SHEAR BLOCK). THE HORIZONTAL FRAME MEMBERS ARE ATTACHED TO THE SHEAR BLOCK WITH 2 NO. 12 X 1/2" FHTF SCREWS (2 PER SHEAR BLOCK). CORNERS ARE SEALED WITH DOW 795 SILICONE SEALANT.

EVALUATION OF THIS PRODUCT IS BASED ON APPLICABLE STANDARDS AND/OR INFORMATION & RESULTS FROM APPLICABLE TEST REPORTS. THE BUILDING CODE VERSION CONSIDERED WITH THIS EVALUATION WAS THAT IN FORCE AT THE TIME OF THE EVALUATION. IN THE EVENT OF CODE VERSION CHANGES/UPDATES OR IN THE EVENT THAT NEW OR ADDITIONAL TESTING IS COMPLETED ON THIS PRODUCT, PRIOR TO STATING CODE COMPLIANCE, THE MANUFACTURER SHALL CONFIRM WITH THE EVALUATION ENGINEER OF RECORD THAT EVERYTHING SPECIFIED HERE-IN IS CURRENT WITH ALL CURRENT TESTING, CODES AND APPLICABLE STANDARDS.

THESE I.G. GLASS OPTIONS ARE NOT APPLICABLE FOR USE WITH A VERTICAL CORNER FRAME MEMBER. I.G. GLASS MAY ONLY BE APPLIED BETWEEN INTERMEDIATE & JAMB FRAME MEMBERS (KAWNEER DOES NOT SUPPLY A CORNER PRESSURE PLATE FOR USE WITH I.G. GLASS)

GLASS D.L.O. SIZE VS. PRESSURE

GLASS OPTIONS	MAXIMUM D.L.O. WIDTH	MAXIMUM D.L.O. HEIGHT	ALLOWABLE DESIGN PRESSURE
1, 2, 3, 6 & 7	58 1/2"	93 1/2"	+/-90 PSF
	57 3/4"	94 3/4"	+/-90 PSF
	73 3/4"	54 5/8"	+/-90 PSF
4 & 5	58 1/2"	93 1/2"	+/-65 PSF
	57 3/4"	94 3/4"	+/-65 PSF
	73 3/4"	54 5/8"	+/-65 PSF

SEE GLAZING DETAILS FOR GLASS OPTIONS

HEIGHT & WIDTH MAY NOT BE INTERCHANGED!

THESE DRAWINGS ARE APPLICABLE ONLY TO THE PRODUCT SPECIFIED. THEY MAY NOT BE USED FOR THE ASSEMBLY AND/OR INSTALLATION OF ANY OTHER PRODUCT NOR MAY THEY BE USED FOR RATIONAL AND/OR LOCAL APPROVAL OF ANY PRODUCT NOT PRODUCED BY THE MANUFACTURER STATED ON THESE DRAWINGS.

MAXIMUM ALLOWABLE FRAMING MEMBER DEFLECTION

L/180 (SPAN OF MEMBER DIVIDED BY 180)

NOTE: THIS IS THE MAXIMUM ALLOWABLE DEFLECTION AS RESTRICTED BY THE BUILDING CODE. IF JOB CONDITIONS REQUIRE LESS DEFLECTION, THE JOB CONDITIONS SHALL CONTROL.

ANCHOR LEGEND

ANCHOR SYMBOL	ANCHOR DESCRIPTION
⊞	STANDARD WIND LOAD ANCHOR
⊕	CORNER WIND LOAD ANCHOR
△	STANDARD DEAD LOAD ANCHOR
⊕	CORNER DEAD LOAD ANCHOR
■	STANDARD T-ANCHOR
◕	CORNER T-ANCHOR
◆	DOOR JAMB U-ANCHOR
▲	F-ANCHOR (FRAME MEMBER ENDS)

SEE SHEETS 6-10 FOR DETAILS OF ANCHORS

VERTICAL MEMBER REINFORCEMENT LEGEND

R1 = REINFORCEMENT PART NUMBER 36
R2 = REINFORCEMENT PART NUMBER 36 & 37
R3 = REINFORCEMENT PART NUMBERS 36, 37 & 38
R4 = REINFORCEMENT PART NUMBERS 36, 37, 38 & 39
R5 = REINFORCEMENT PART NUMBER 40

SEE PARTS DRAWINGS & PARTS LIST FOR APPLICABLE REINFORCEMENT MEMBERS & THEIR DETAIL.

STATE OF TEXAS
WARREN W. SCHAEFER
113497
LICENSED PROFESSIONAL ENGINEER

NOTE: INFORMATION ON THIS SHEET APPLIES TO ALL ELEVATIONS.

DRAWN BY: W.W.S.	CHECKED BY: W.W.S.
PLOT: 1=48	DATE: 03/19/13

NO.	REVISION DESCRIPTION	BY	DATE

DRAWING TITLE: 7 13/16" DEEP 1600 SYSTEM 1 CURTAIN WALL (L.M.I.)

JOB INFORMATION: KAWNEER COMPANY, INC. 555 GUTHRIDGE COURT NORCROSS, GA 30092 770-449-5555

CONSULTANTS: W. W. SCHAEFER ENGINEERING & CONSULTING, P.A. (REG. NO. F-14980) 7480 150TH COURT NORTH PALM BEACH GARDENS, FL 33418 PHONE: 561-744-3424

CERTIFICATION: MAR 20 2013 WARREN W. SCHAEFER, P.E. P.E. NO. 113497

DRAWING NO. 1789T REV.

SHEET NO. 1 OF 18

NOTES APPLICABLE TO MULTI-SPAN CURTAIN WALLS

1. WITH EACH APPLICABLE JOB, SHOP DRAWINGS SHALL BE PREPARED AND CERTIFIED BY A LICENSED ENGINEER EXPERIENCED WITH CURTAIN WALL DESIGN.
2. THE RESPONSIBLE ENGINEER SHALL DESIGN THE WALL SYSTEM SEPARATELY FOR EACH JOB & CONFIRM THAT ALL CONDITIONS STATED HERE-IN HAVE BEEN CONSIDERED AND ADHERED TO IN THAT DESIGN.
3. IN HIS/HER DESIGN, THE RESPONSIBLE ENGINEER SHALL VERIFY THE INTEGRITY OF ALL CONNECTIONS AND FRAMING MEMBERS & SHALL TAKE FULL RESPONSIBILITY FOR THE INTEGRITY OF THE SYSTEM DESIGN AS A WHOLE WHILE NOT ALLOWING THE CONDITIONS STATED HERE-IN TO BE EXCEEDED. ALLOWABLE SUPPORT REACTIONS AND VERTICAL FRAMING MEMBER BENDING MOMENTS SHALL NOT EXCEED THOSE STATED IN THE TABLES ON THIS SHEET, REGARDLESS OF JOB DESIGN.
4. THE CURTAIN WALL DESIGN ENGINEER SHALL CONSIDER ALL APPLICABLE REACTION LOADS IN HIS/HER DESIGN WHILE NOT ALLOWING THE REACTIONS RESUTLING FROM WIND LOADS TO EXCEED THOSE SPECIFIED IN THE ANCHOR REACTION LOAD TABLE.
5. THE WORSE CASE OF THE CONDITIONS SPECIFIED IN THIS PRODUCT APPROVAL DRAWING AND THOSE DETERMINED BY THE INDIVIDUAL JOB ENGINEER'S ANALYSIS & DESIGN SHALL CONTROL AS APPLICABLE FOR THE ACTUAL JOB.
6. REGARDLESS OF JOB DETERMINED MEMBER STRESS & DEFLECTION CONDITIONS, THE FOLLOWING SHALL APPLY:
   - A. REINFORCEMENT TYPE R1 MUST BE PLACED BETWEEN SUPPORTS IN ALL VERTICAL INTERMEDIATE FRAME MEMBERS THAT SPAN OVER 114" BETWEEN THEIR SUPPORTS (NOT REQUIRED IF THE UNSUPPORTED SPAN IS 114" OR LESS & THE JOB DESIGN ALLOWS FOR NO REINFORCEMENT).
   - B. IF BETWEEN 2 DOOR UNITS, THE VERTICAL FRAMING MEMBER SHALL BE REINFORCED. REINFORCEMENT SHALL BEGIN MAXIMUM 12" UP FROM THE SILL & EXTEND MINIMUM 12" PAST THE DOOR HEAD FRAME.
   - C. ALL VERTICAL INTERMEDIATE FRAMING MEMBERS SHALL BE REINFORCED ACROSS ALL INTERMEDIATE DEAD/WIND LOAD ANCHOR LOCATIONS WITH ONE OF THE REINFORCEMENT TYPES R1, R2 OR R3 AS SPECIFIED IN THE ELEVATION. THIS REINFORCEMENT SHALL EXTEND A MINIMUM OF 18" ABOVE & BELOW THE SUPPORT.
   - D. REINFORCEMENT TYPE R4 IS REQUIRED IN ALL VERTICAL CORNER FRAME MEMBERS. IT SHALL BE CONTINUOUS BETWEEN ALL MEMBER SPLICE JOINTS AND EXTEND TO WITHIN 24" OF WALL BASE, 12" OF A SPLICE & 18" OF THE WALL TOP.
7. REINFORCEMENT IS NOT REQUIRED TO BE CONTINUOUS TOP TO BOTTOM WITHIN THE VERTICAL FRAMING MEMBERS. REINFORCEMENT MAY BE NON-CONTINUOUS, AS DETERMINED FOR EACH JOB, PROVIDING IT MEETS THE MINIMUM GUIDELINES OF THIS DRAWING.
8. THIS ELEVATION SHOWS THE 1600 CURTAIN WALL SYSTEM 1 IN A MULTI-STORY APPLICATION. THE NUMBER OF FLOORS WITH WHICH THIS SYSTEM MAY BE USED RANGE FROM TWO(2) TO UNLIMITED WITH THE ONLY RESTRICTIONS BEING THE MAXIMUM SPAN BETWEEN FLOORS/SUPPORTS AND THE MAXIMUM D.L.O. SIZES SPECIFIED.
9. SPLICING OF VERTICAL FRAME MEMBERS MAY OCCUR BETWEEN SUPPORTS AS REQUIRED. LOCATION OF THOSE SPLICES SHALL BE WHERE A BENDING MOMENT OF NEAR ZERO(0) EXISTS IN THE MEMBER.
10. THE MULTI-SPAN ELEVATION SHOWN SHOWS ONE DOOR SECTION. MULTIPLE DOOR SECTIONS MAY OCCUR SIDE-BY SIDE IN ONE WALL SYSTEM PROVIDING ALL REQUIREMENTS WITHIN THIS DRAWING ARE MET AND THE JOB DESIGN ALLOWS FOR THE MULTIPLE DOOR CONDITION.
11. ALTHOUGH A DOOR SECTION IS SHOWN, THAT SECTION MAY EXIST WITH OR WITHOUT A DOOR.
12. THE ELEVATION HERE-IN SHOWS T-ANCHORS AT THE BASE OF THE WALL ONLY. THESE ANCHORS MAY ALSO BE USED AT THE TOP OF A WALL IN LIEU OF THE WIND/DEAD LOAD ANCHORS SHOWN PROVIDING THE SPAN BETWEEN THE T-ANCHORS AND THE BELOW WIND/DEAD LOAD ANCHORS DOES NOT EXCEED 167 1/2" (SAME SPAN AS AT THE BASE) & THEY ARE INSTALLED THE SAME AS SHOWN AT THE BASE. T-ANCHORS MAY APPLY AT THE TOP END OF A DOOR JAMB FRAME MEMBER.

ANCHOR REQUIREMENTS TABLE (MULTI-SPAN CURTAIN WALL)

OPENING TYPE (SUBSTRATE)	FRAME/CLIP TO OPENING FASTENER TYPE	MINIMUM EMBED	MINIMUM EDGE DIST.
F-PERIMETER ANCHOR SCREWS			
MIN. 1/8" THK A36 STEEL	1/4-14 OR 20 GR. 5 SELF TAP/DRILL SCREW	FULL	1/2"
MIN. 3000 PSI CONCRETE	(1) 3/8" CONCRETE SCREW ANCHOR	2 1/2"	2 1/2"
T & U-ANCHOR SCREWS/BOLTS (VERTICAL MEMBER ENDS)			
MIN. 1/4" THK A36 STEEL	3/8"-16 430 SS HCMS OR GR. 5 CS THREAD FORMING SCREW	FULL	3/4"
	3/8" GR. 5 CS OR 410 SS BOLT WITH LOCK WASHER & NUT	FULL	3/4"
	1/2"-13 300 SS HCMS OR GR. 5 CS THREAD FORMING SCREW	FULL	1"
	1/2" GR. 5 CS OR 410 SS BOLT WITH LOCK WASHER & NUT	FULL	1"
(2) MIN. 3000 PSI CONCRETE	(1) 1/2" CONCRETE SCREW ANCHOR	4"	SEE DETAILS

(1) 3/8" & 1/2" CONCRETE SCREWS SHALL BE SIMPSON STRONG-TIE TITAN HD SCREW ANCHOR (GALVANIZED STEEL).
(2) MINIMUM CONCRETE SLAB THICKNESS FOR PLACEMENT OF "T" & "U" ANCHORS IS 7".

(1) MAXIMUM ALLOWABLE BENDING MOMENTS IN VERTICAL FRAMING MEMBERS (FOR USE WITH MULTI-SPAN CURTAIN WALL)

(2) VERTICAL MEMBER	(3) MAXIMUM ALLOWABLE BENDING MOMENT (POS & NEG)
INTERMEDIATE MEMBER WITH NO REINFORCEMENT	61934 IN-LB
INTERMEDIATE MEMBER WITH REINFORCEMENT "R1"	84610 IN-LB
INTERMEDIATE MEMBER WITH REINFORCEMENT "R2"	115852 IN-LB
INTERMEDIATE MEMBER WITH REINFORCEMENT "R3"	133705 IN-LB
INTERMEDIATE MEMBER WITH REINFORCEMENT "R4"	150418 IN-LB
CORNER MEMBER WITH REINFORCEMENT "R5"	(4) 141377 IN-LB

NOTES:
(1) THE VALUES IS THIS TABLE ARE APPLICABLE TO THE JOB REQUIRED DESIGN OF THE MULTI-SPAN WALL SYSTEM & NEED NOT BE CONSIDERED WITH SINGLE SPAN WALLS. ALL SINGLE SPAN MEMBER & REINFORCEMENT CONDITIONS SHALL BE AS SPECIFICALLY SPECIFIED IN THE SINGLE SPAN ELEVATIONS.
(2) FOR DESCRIPTIONS OF REINFORCEMENTS, SEE THE "VERTICAL MEMBER REINFORCEMENT LEGEND".
(3) ALL VALUES ARE BASED ON THE WORSE CASE OF TESTED MOMENT AND ALLOWABLE MOMENT.
(4) MOMENT VALUE SHOWN FOR THE CORNER MULLION IS DUE TO THE RESULTANT LOAD IN THE PLANE OF THE MULLION (LOAD FROM BOTH SIDES COMBINED INTO A RESULTANT). FOR SINGLE SIDE LOAD, THE ALLOWABLE MOMENT SHALL NOT EXCEED 70688 IN-LB. IN THAT DIRECTION (LOAD VECTOR 45 DEGREES TO MULLION ANGLE).

ANCHOR REACTION LOAD CAPACITY (MULTI-SPAN CURTAIN WALL)

ANCHOR SYMBOL	ANCHOR DESCRIPTION	(1) MAXIMUM ALLOWABLE REACTION LOAD
⊞	STANDARD WIND LOAD ANCHOR	8980 LBS
⊕	CORNER WIND LOAD ANCHOR	(2) 5967 LBS
△	STANDARD DEAD LOAD ANCHOR	8980 LBS
◈	CORNER DEAD LOAD ANCHOR	(2) 5967 LBS
◪	STANDARD T-ANCHOR	3152 LBS
◕	CORNER T-ANCHOR	(2) 1789 LBS
◆	DOOR JAMB U-ANCHOR	2694 LBS
◭	F-ANCHOR (FRAME MEMBER ENDS)	1131 LBS

(1) MAXIMUM ALLOWABLE REACTION LOADS SHOWN CONSIDER REACTIONS FROM WIND LOADS ONLY & APPLY TO BOTH POSITIVE & NEGATIVE WIND DIRECTIONS. IN ADDITION TO WIND LOADS, THE CURTAIN WALL DESIGN ENGINEER OF RECORD FOR EACH PROJECT SHALL ALSO CONSIDER OTHER APPLICABLE LOADS SUCH AS, BUT POSSIBLY NOT LIMITED TO, DEAD LOADS FROM THE CURTAIN WALL WEIGHT.
(2) REACTION LOAD SHOWN FOR THE CORNER ANCHORS IS THE RESULTANT LOAD IN THE PLANE OF THE MULLION (LOAD FROM BOTH SIDES COMBINED INTO A RESULTANT). FOR EITHER SIDE LOAD, THE ALLOWABLE REACTION LOAD SHALL NOT EXCEED 4220 LB. FROM EITHER SIDE FOR THE WIND & DEAD LOAD ANCHORS NOR 1265 LBS FROM EITHER SIDE FOR THE T-ANCHOR.

MAXIMUM ALLOWABLE DESIGN PRESSURE (MULTI-SPAN CURTAIN WALL)

+90/-90 PSF

1. THE ABOVE STATED PRESSURES ARE THE MAXIMUM ALLOWED ON ANY JOB REGARDLESS OF WHAT THE JOB SPECIFIC DESIGN RESULTS MAY SHOW. INCREASE OF ALLOWABLE DESIGN PRESSURE ON ANY JOB IS CONSIDERED OUTSIDE THE SCOPE OF THIS APPROVAL. SEE "MULTI-SPAN WALL NOTES" ON THIS SHEET FOR ACTUAL JOB DESIGN CONDITIONS.
2. SEE ALLOWABLE GLASS DESIGN PRESSURE TABLE ON SHEET 1 FOR GLASS PRESSURE RESTRICTIONS. THE LESSER OF THE ALLOWABLE PRESSURE ON THE FRAMING SYSTEM AND THAT OF THE GLASS SHALL CONTROL FOR THE OVERALL SYSTEM.

NOTE: INFORMATION ON THIS SHEET APPLIES TO ELEVATIONS ON SHEET 3 ONLY.

STATE OF TEXAS
WARREN W. SCHAEFER
113497
LICENSED PROFESSIONAL ENGINEER

DRAWN BY: W.W.S.	CHECKED BY: W.W.S.
PLOT: 1=48	DATE: 03/19/13

NO.	REVISION DESCRIPTION	BY	DATE

DRAWING TITLE: CURTAIN WALL (L.M.I.) 7 13/16" DEEP 1600 SYSTEM 1

JOB INFORMATION: KAWNEER COMPANY, INC. 555 GUTHRIDGE COURT NORCROSS, GA 30092 770-449-5555

CONSULTANTS: W. W. SCHAEFER ENGINEERING & CONSULTING, P.A. (REG. NO. F-14980) 7480 150TH COURT NORTH PALM BEACH GARDENS, FL 33418 PHONE: 561-744-3424

CERTIFICATION: MAR 20 2013 — WARREN W. SCHAEFER, P.E. P.E. NO. 113497

DRAWING NO. 1789T | REV.

SHEET NO. 2 OF 18

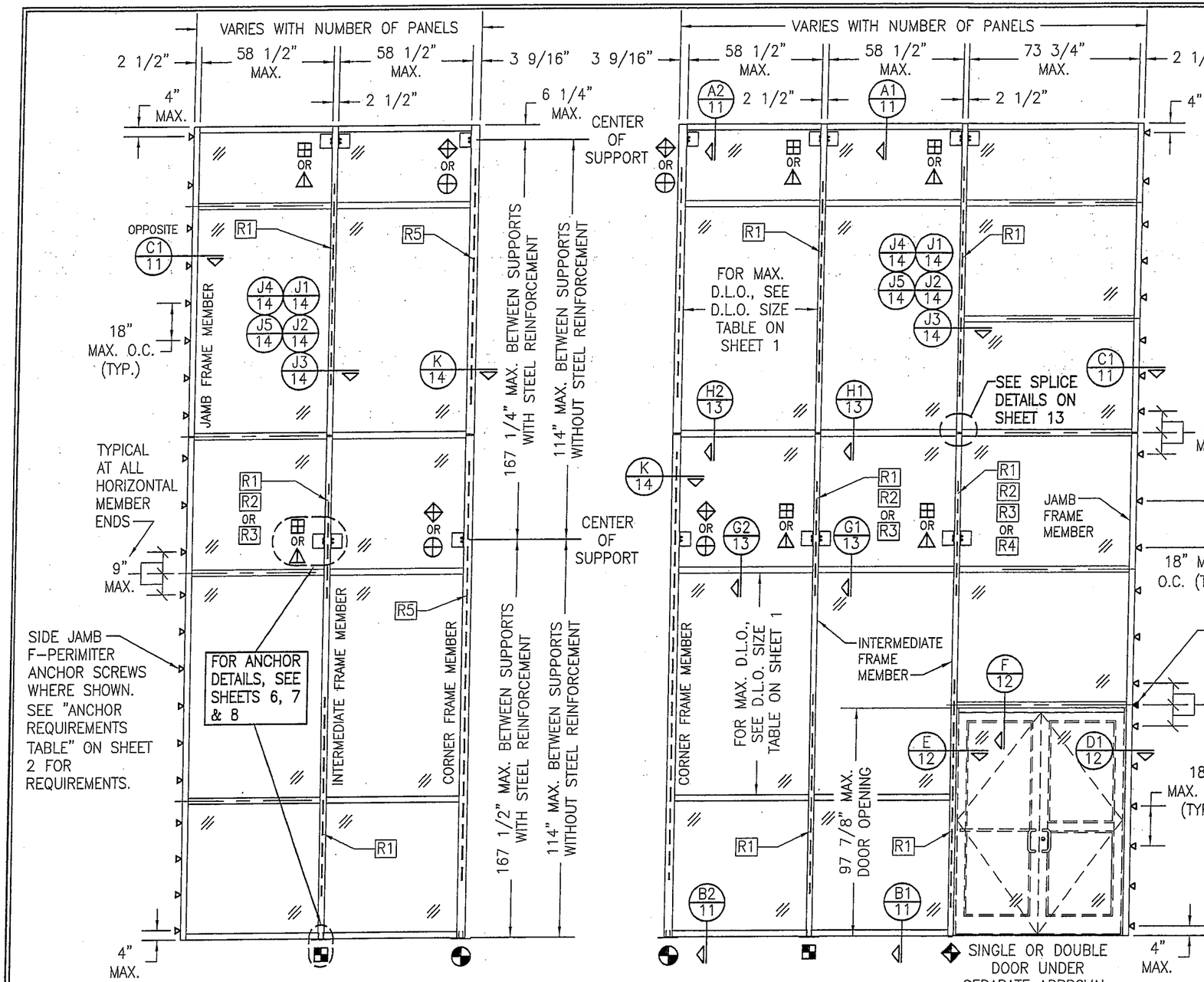

EXTERIOR ELEVATION VIEW "A-A":
MULTI-SPAN CURTAIN WALL
SCALE: 1/4" = 1'-0"

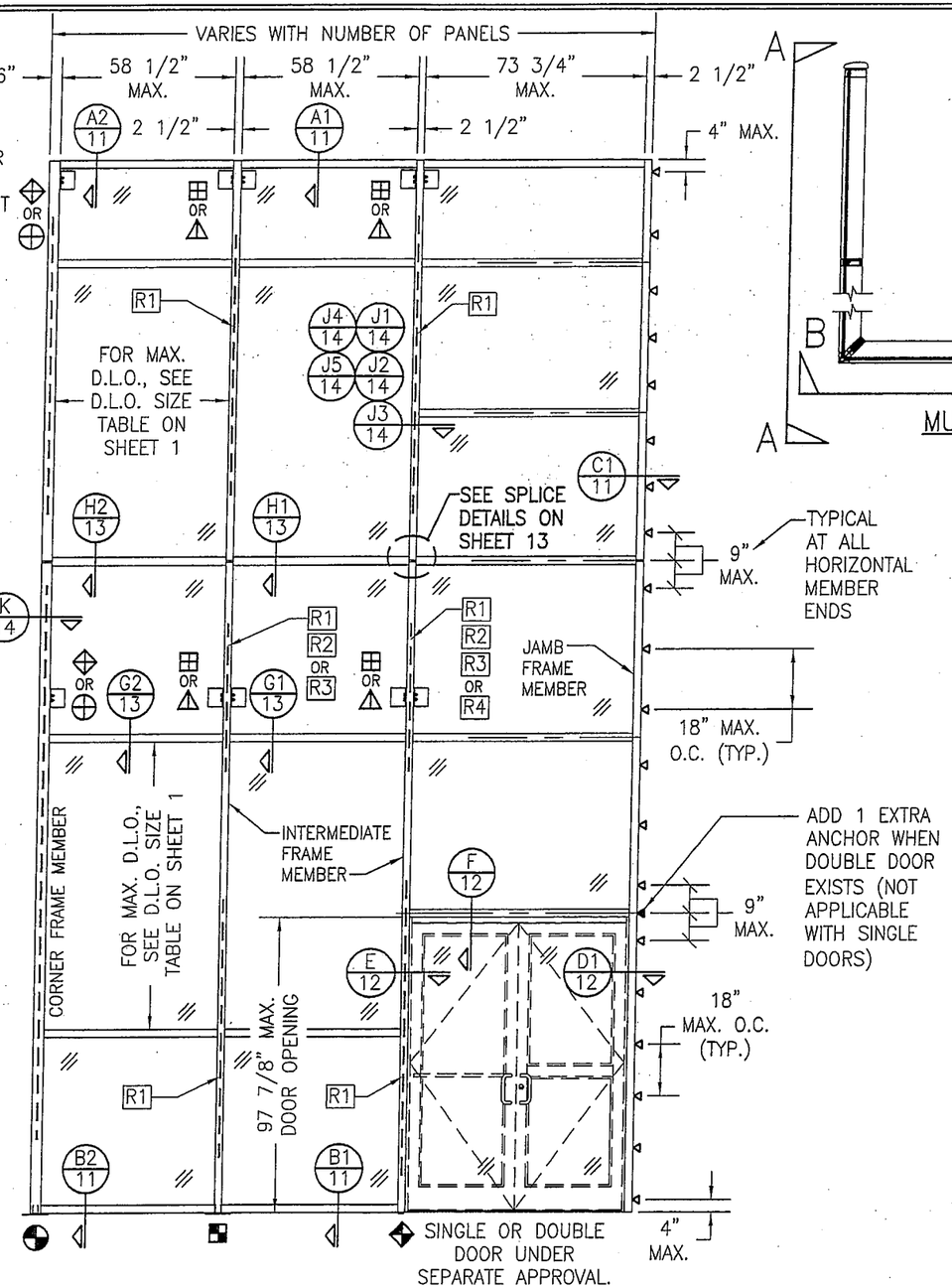

EXTERIOR ELEVATION VIEW "B-B":
MULTI-SPAN CURTAIN WALL
SCALE: 1/4" = 1'-0"

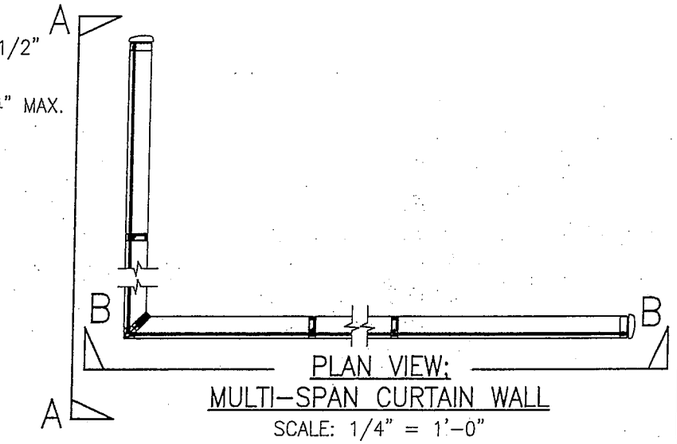

PLAN VIEW:
MULTI-SPAN CURTAIN WALL
SCALE: 1/4" = 1'-0"

DRAWN BY: W.W.S.	CHECKED BY: W.W.S.
PLOT: 1=48	DATE: 03/19/13

NO.	REVISION DESCRIPTION	BY	DATE

DRAWING TITLE
7 13/16" DEEP 1600 SYSTEM 1 CURTAIN WALL (L.M.I.)

JOB INFORMATION:
KAWNEER COMPANY, INC.
555 GUTHRIDGE COURT
NORCROSS, GA 30092
770-449-5555

CONSULTANTS
W. W. SCHAEFER ENGINEERING & CONSULTING, P.A. (REG. NO. F-14980)
7480 150TH COURT NORTH
PALM BEACH GARDENS, FL 33418
PHONE: 561-744-3424

CERTIFICATION
MAR 20 2013
WARREN W. SCHAEFER P.E.
P.E. NO. 113497

STATE OF TEXAS
WARREN W. SCHAEFER
113497
LICENSED PROFESSIONAL ENGINEER

DRAWING NO. 1789T
REV.

SHEET NO. 3 OF 18

ALLOWABLE DESIGN PRESSURE (SINGLE SPAN REINFORCED CURTAIN WALL)

MAXIMUM MULLION SPAN (IN.)	MAXIMUM LOAD WIDTH (IN.)	ALLOWABLE PRESSURE (POS & NEG PSF)	
		AT STANDARD & CORNER MULLION	AT DOOR JAMB MULLION
147	76 1/4	81.0	69.3
	72	85.8	73.3
	68 5/8	90.0	77.0
	62	90.0	85.2
	58	90.0	82.6
144	76 1/4	82.7	70.7
	72	87.6	74.9
	68 5/8	90.0	78.6
	62	90.0	86.9
	59	90.0	90.0
132	76 1/4	90.0	77.1
	72	90.0	81.7
	68 5/8	90.0	85.7
	65	90.0	90.0
120	76 1/4	90.0	84.8
	72	90.0	89.8
112	76 1/4	90.0	90.0

PRESSURE TABLE NOTES:
1. SEE ELEVATION FOR DIMENSIONING OF LOAD WIDTH.
2. PRESSURES SHOWN ARE SPECIFIC TO EACH INDIVIDUAL MULLION SUPPORT AREA. ALLOWABLE PRESSURE MAY VARY FROM BAY TO BAY AS DICTATED BY EACH INDIVIDUAL MULLION CONDITION.
3. LESSER OF PRESSURES STATED IN THIS TABLE & THE ALLOWABLE GLASS PRESSURE, AS SHOWN ON SHEET 1, SHALL CONTROL AS ALLOWABLE FOR THE WALL ASSEMBLY.
4. LESSER PRESSURE AT DOOR MULLION IS DUE TO THE DOOR JAMB U-ANCHOR HAVING A LESSER CAPACITY THAN THAT OF THE T-ANCHOR.

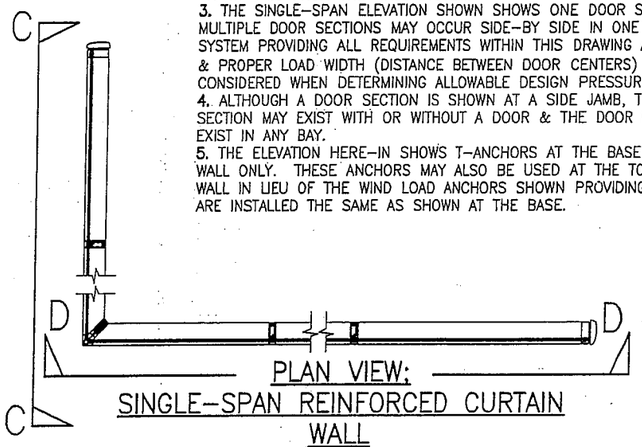

PLAN VIEW: SINGLE-SPAN REINFORCED CURTAIN WALL

SCALE: 1/4" = 1'-0"

NOTES APPLICABLE TO SINGLE-SPAN REINFORCED CURTAIN WALLS

1. REINFORCEMENT SHALL RUN CONTINUOUS IN INTERMEDIATE AND CORNER VERTICAL MEMBERS & EXTEND TO WITHIN 13 1/2" OF THE ENDS.
2. THERE IS NO LIMIT TO THE NUMBER OF SECTIONS HORIZONTALLY PROVIDING THE OPENING IS DESIGNED TO SUPPORT THE LOADS TRANSFERED FROM THE WALL SYSTEM.
3. THE SINGLE-SPAN ELEVATION SHOWN SHOWS ONE DOOR SECTION. MULTIPLE DOOR SECTIONS MAY OCCUR SIDE-BY SIDE IN ONE WALL SYSTEM PROVIDING ALL REQUIREMENTS WITHIN THIS DRAWING ARE MET & PROPER LOAD WIDTH (DISTANCE BETWEEN DOOR CENTERS) IS CONSIDERED WHEN DETERMINING ALLOWABLE DESIGN PRESSURE.
4. ALTHOUGH A DOOR SECTION IS SHOWN AT A SIDE JAMB, THAT SECTION MAY EXIST WITH OR WITHOUT A DOOR & THE DOOR MAY EXIST IN ANY BAY.
5. THE ELEVATION HERE-IN SHOWS T-ANCHORS AT THE BASE OF THE WALL ONLY. THESE ANCHORS MAY ALSO BE USED AT THE TOP OF A WALL IN LIEU OF THE WIND LOAD ANCHORS SHOWN PROVIDING THEY ARE INSTALLED THE SAME AS SHOWN AT THE BASE.

ANCHOR REQUIREMENTS TABLE (SINGLE SPAN REINFORCED CURTAIN WALL)

OPENING TYPE (SUBSTRATE)	FRAME/CLIP TO OPENING FASTENER TYPE	MINIMUM EMBED	MINIMUM EDGE DIST.
F-PERIMETER ANCHOR SCREWS			
MIN. 16 GA. 50 KSI METAL STUD	1/4-14 GR. 5 SELF TAP/DRILL SCREW	FULL	1/2"
MIN. 2X6 WOOD FRAME OR BUCK (MIN. GR. 2 & G=0.55)	1/4" DIA. GR. 5 COARSE THREAD SCREW	1 1/4"	3/4"
MIN. 1/8" THK A36 STEEL	1/4-14 OR 20 GR. 5 SELF TAP/DRILL SCREW	FULL	1/2"
MIN. 3000 PSI CONCRETE	(1) 3/8" CONCRETE SCREW ANCHOR	2 1/2"	2 1/2"
T & U-ANCHOR SCREWS/BOLTS (VERTICAL MEMBER ENDS)			
MIN. 1/4" THK A36 STEEL	3/8"-16 430 SS HCMS OR GR. 5 CS THREAD FORMING SCREW	FULL	3/4"
	3/8" GR. 5 CS OR 410 SS BOLT WITH LOCK WASHER & NUT	FULL	3/4"
	1/2"-13 300 SS HCMS OR GR. 5 CS THREAD FORMING SCREW	FULL	1"
	1/2" GR. 5 CS OR 410 SS BOLT WITH LOCK WASHER & NUT	FULL	1"
(2) MIN. 3000 PSI CONCRETE	(1) 1/2" CONCRETE SCREW ANCHOR	4"	SEE DETAILS

(1) 3/8" & 1/2" CONCRETE SCREWS SHALL BE SIMPSON STRONG-TIE TITAN HD SCREW ANCHOR (GALVANIZED STEEL).
(2) MINIMUM CONCRETE SLAB THICKNESS FOR PLACEMENT OF "T" & "U" ANCHORS IS 7".

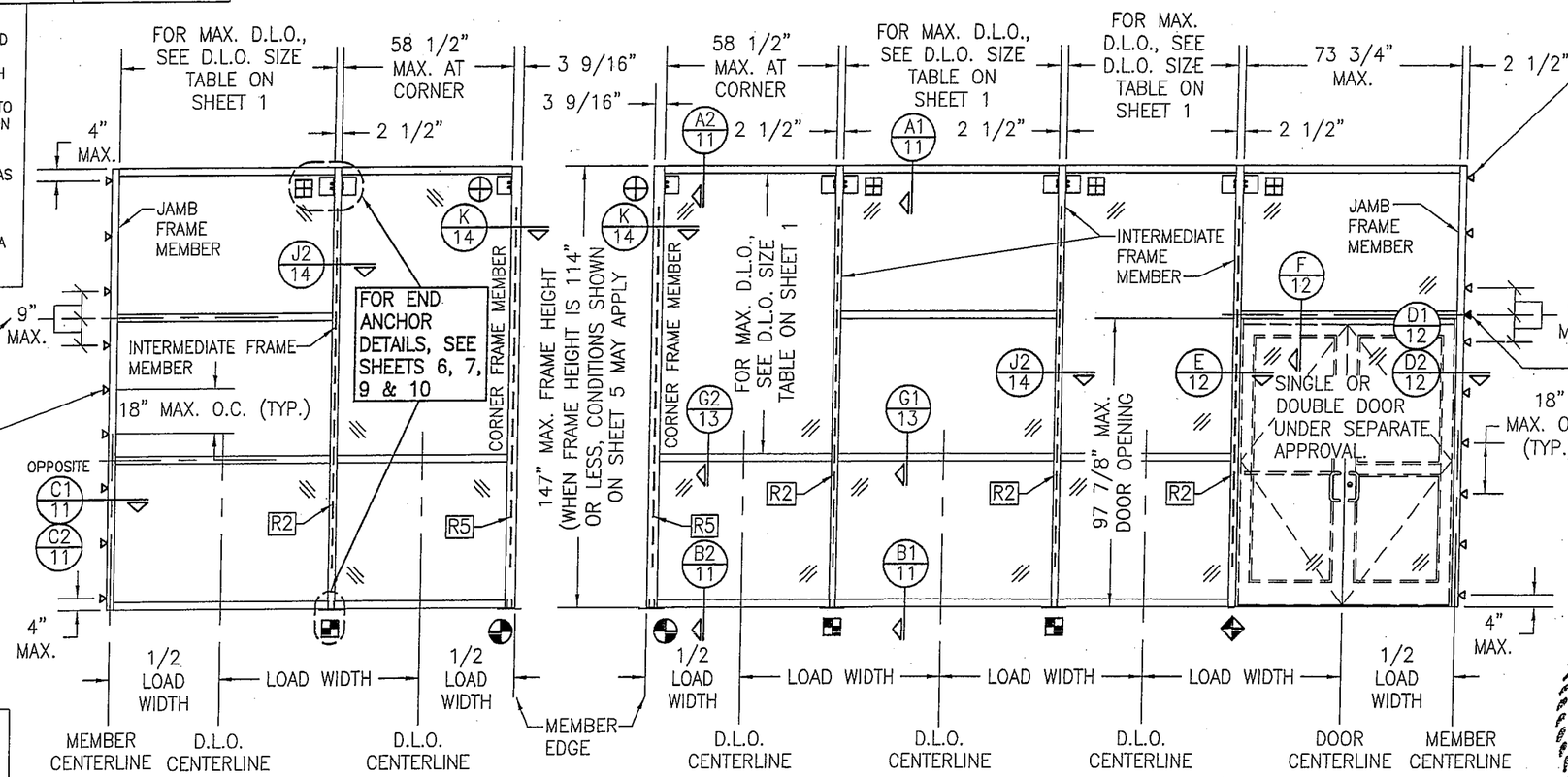

EXTERIOR ELEVATION VIEW "C-C": SINGLE-SPAN REINFORCED CURTAIN WALL

SCALE: 1/4" = 1'-0"

EXTERIOR ELEVATION VIEW "D-D": SINGLE-SPAN REINFORCED CURTAIN WALL

SCALE: 1/4" = 1'-0"

NOTE: INFORMATION ON THIS SHEET APPLIES TO ELEVATIONS ON THIS SHEET ONLY.

STATE OF TEXAS — WARREN W. SCHAEFER — 113497 — LICENSED PROFESSIONAL ENGINEER

DRAWN BY: W.W.S.	CHECKED BY: W.W.S.
PLOT: 1=48	DATE: 03/19/13

NO.	REVISION DESCRIPTION	BY	DATE

DRAWING TITLE: 7 13/16" DEEP 1600 SYSTEM 1 CURTAIN WALL (L.M.I.)

JOB INFORMATION: KAWNEER COMPANY, INC. 555 GUTHRIDGE COURT NORCROSS, GA 30092 770-449-5555

CONSULTANTS: W. W. SCHAEFER ENGINEERING & CONSULTING, P.A. (REG. NO. F-14980) 7480 150TH COURT NORTH PALM BEACH GARDENS, FL 33418 PHONE: 561-744-3424

CERTIFICATION: MAR 20 2013 — WARREN W. SCHAEFER, P.E. P.E. NO. 113497

DRAWING NO. 1789T — REV.

SHEET NO. 4 OF 18

ALLOWABLE DESIGN PRESSURE (SINGLE SPAN NON-REINFORCED CURTAIN WALL)

MAXIMUM MULLION SPAN (IN.)	MAXIMUM LOAD WIDTH (IN.)	ALLOWABLE PRESSURE (POS & NEG PSF)
114	76 1/4	72.0
	72	76.2
	66	83.2
	61	90.0
108	76 1/4	76.0
	72	80.5
	66	87.8
	64	90.0
102	76 1/4	80.5
	72	85.2
	68	90.0
96	76 1/4	85.5
	72	90.0
90	76 1/4	90.0

NOTES:
1. SEE ELEVATION FOR DIMENSIONING OF LOAD WIDTH.
2. PRESSURES SHOWN ARE SPECIFIC TO EACH INDIVIDUAL MULLION SUPPORT AREA. ALLOWABLE PRESSURE MAY VARY FROM BAY TO BAY AS DICTATED BY EACH INDIVIDUAL MULLION CONDITION.
3. LESSER OF PRESSURES STATED IN THIS TABLE & THE ALLOWABLE GLASS PRESSURE, AS SHOWN ON SHEET 1, SHALL CONTROL AS ALLOWABLE FOR THE WALL ASSEMBLY.

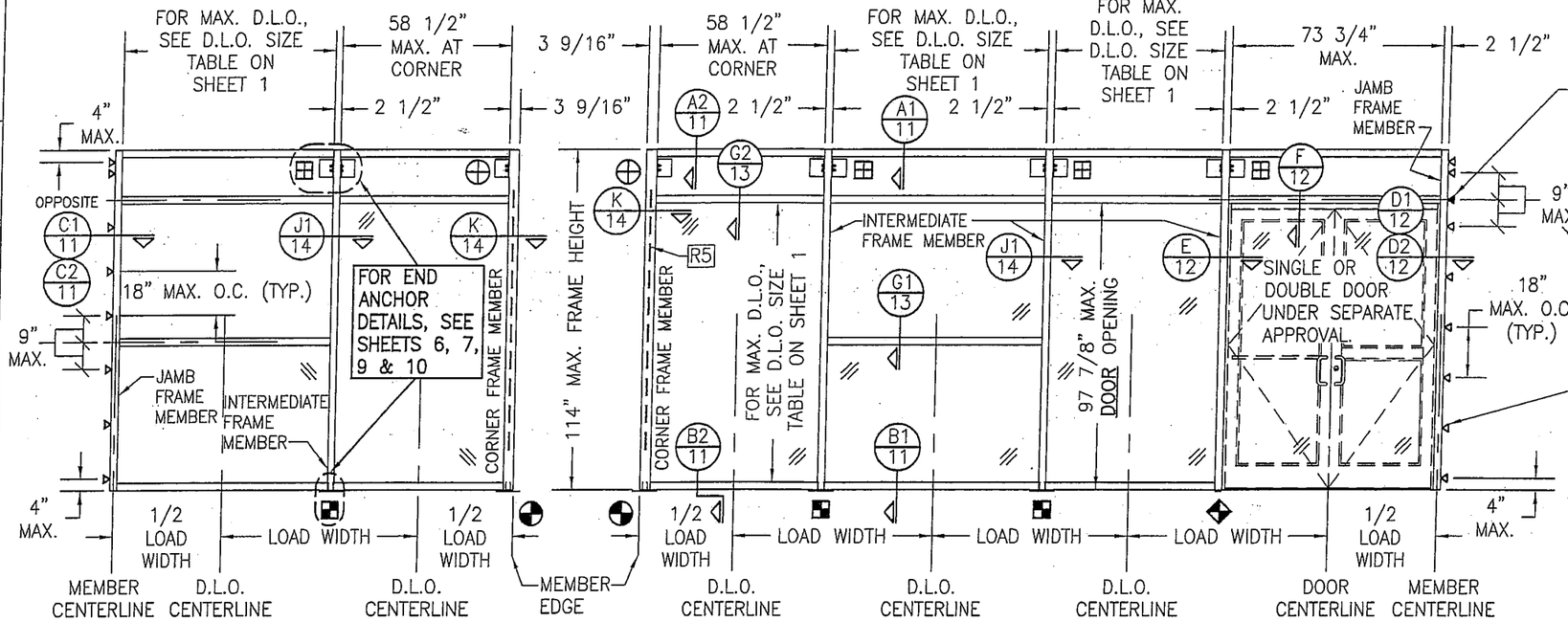

EXTERIOR ELEVATION VIEW "E-E":
SINGLE-SPAN NON-REINFORCED CURTAIN WALL WITH CONTINUOUS SIDE JAMB FRAME F-ANCHOR
SCALE: 1/4" = 1'-0"

EXTERIOR ELEVATION VIEW "F-F":
SINGLE-SPAN NON-REINFORCED CURTAIN WALL WITH CONTINUOUS SIDE JAMB FRAME F-ANCHOR
SCALE: 1/4" = 1'-0"

NOTES APPLICABLE TO SINGLE-SPAN NON-REINFORCED CURTAIN WALLS

1. THERE IS NO LIMIT TO THE NUMBER OF SECTIONS HORIZONTALLY PROVIDING THE OPENING IS DESIGNED TO SUPPORT THE LOADS TRANSFERED FROM THE WALL SYSTEM.
2. THE SINGLE-SPAN ELEVATION SHOWN SHOWS ONE DOOR SECTION. MULTIPLE DOOR SECTIONS MAY OCCUR SIDE-BY SIDE IN ONE WALL SYSTEM PROVIDING ALL REQUIREMENTS WITHIN THIS DRAWING ARE MET & PROPER LOAD WIDTH (DISTANCE BETWEEN DOOR CENTERS) IS CONSIDERED WHEN DETERMINING ALLOWABLE DESIGN PRESSURE.
3. ALTHOUGH A DOOR SECTION IS SHOWN AT A SIDE JAMB, THAT SECTION MAY EXIST WITH OR WITHOUT A DOOR & THE DOOR MAY EXIST IN ANY BAY.
4. THE ELEVATION HERE-IN SHOWS T-ANCHORS AT THE BASE OF THE WALL ONLY. THESE ANCHORS MAY ALSO BE USED AT THE TOP OF A WALL IN LIEU OF THE WIND LOAD ANCHORS SHOWN PROVIDING THEY ARE INSTALLED THE SAME AS SHOWN AT THE BASE.
5. REGARDLESS OF FRAME HEIGHT, CORNER FRAME MEMBER MUST BE REINFORCED. REINFORCEMENT SHALL RUN CONTINUOUS & EXTEND TO WITHIN 13 1/2" OF THE FRAME MEMBER ENDS.
6. SIDE JAMB FRAME MEMBERS MAY BE SUPPORTED EITHER BY A CONTINUOUS SIDE JAMB F-PERIMITER ANCHOR OR BY END ANCHORS AS SHOWN.
7. IF BETWEEN 2 DOOR UNITS, THE VERTICAL FRAMING MEMBER SHALL BE REINFORCED. REINFORCEMENT SHALL BEGIN MAXIMUM 12" UP FROM THE SILL & EXTEND MINIMUM 12" PAST THE DOOR HEAD FRAME.

ANCHOR REQUIREMENTS TABLE (SINGLE SPAN NON-REINFORCED CURTAIN WALL)

OPENING TYPE (SUBSTRATE)	FRAME/CLIP TO OPENING FASTENER TYPE	MINIMUM EMBED	MINIMUM EDGE DIST.
F-PERIMETER ANCHOR SCREWS			
MIN. 16 GA. 50 KSI METAL STUD	1/4-14 GR. 5 SELF TAP/DRILL SCREW	FULL	1/2"
MIN. 2X6 WOOD FRAME OR BUCK (MIN. GR. 2 & G=0.55)	1/4" DIA. GR. 5 COARSE THREAD SCREW	1 1/4"	3/4"
MIN. 1/8" THK A36 STEEL	1/4-14 OR 20 GR. 5 SELF TAP/DRILL SCREW	FULL	1/2"
MIN. 3000 PSI CONCRETE	(1) 3/8" CONCRETE SCREW ANCHOR	2 1/2"	2 1/2"
T, F & U-ANCHOR SCREWS/BOLTS (VERTICAL MEMBER ENDS)			
MIN. 1/4" THK A36 STEEL	3/8"-16 430 SS HCMS OR GR. 5 CS THREAD FORMING SCREW	FULL	3/4"
	3/8" GR. 5 CS OR 410 SS BOLT WITH LOCK WASHER & NUT	FULL	3/4"
MIN. 1/8" THK A36 STEEL	1/4-14 OR 20 GR. 5 SELF TAP/DRILL SCREW	FULL	1/2"
(2) MIN. 3000 PSI CONCRETE	(1) 3/8" CONCRETE SCREW ANCHOR	3 1/4"	SEE DETAILS
MIN. 2X6 WOOD FRAME OR BUCK (MIN. GR. 3 & G=0.55)	5/16" DIA. GR. 5 COARSE THREAD SCREW	1 1/4"	3/4"
MIN. 16 GA. 50 KSI METAL STUD	1/4-14 GR. 5 SELF TAP/DRILL SCREW	FULL	1/2"

(1) 3/8" CONCRETE SCREWS SHALL BE SIMPSON STRONG-TIE TITAN HD SCREW ANCHOR (GALVANIZED STEEL).
(2) MINIMUM CONCRETE SLAB THICKNESS FOR PLACEMENT OF "T", "F" & "U" ANCHORS IS 5 1/2".

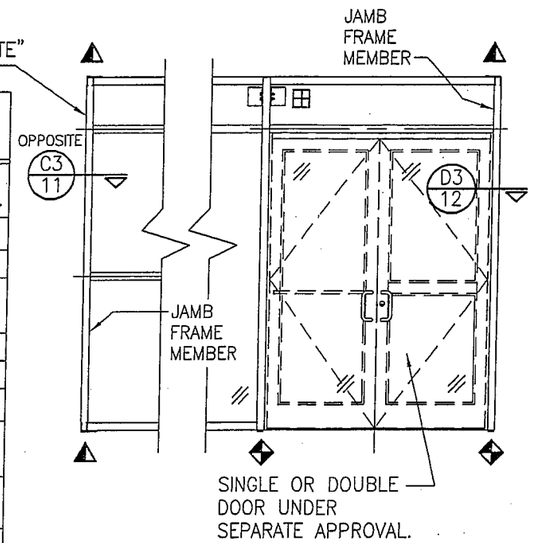

ALTERNATE SIDE JAMB FRAME CONDITION (SUPPORTED BY END F-ANCHORS VS. CONTINUOUS SIDE F-ANCHORS)
SCALE: 1/4" = 1'-0"

ALL CONDITIONS SHOWN IN THE MAIN ELEVATIONS OF THIS SHEET SHALL EQUALLY APPLY TO THIS SIDE JAMB CONDITION.

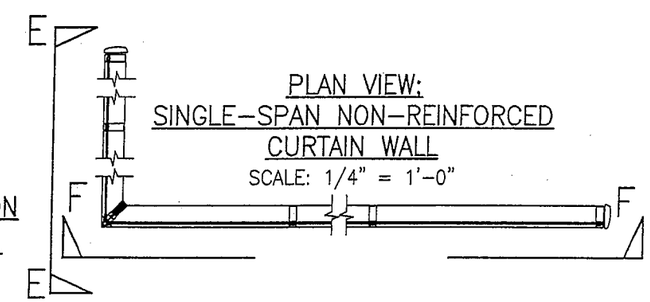

PLAN VIEW:
SINGLE-SPAN NON-REINFORCED CURTAIN WALL
SCALE: 1/4" = 1'-0"

NOTE: INFORMATION ON THIS SHEET APPLIES TO ELEVATIONS ON THIS SHEET ONLY.

DRAWN BY: W.W.S.	CHECKED BY: W.W.S.
PLOT: 1=48	DATE: 03/19/13

NO.	REVISION DESCRIPTION	BY	DATE

DRAWING TITLE: 7 13/16" DEEP 1600 SYSTEM 1 CURTAIN WALL (L.M.I.)

JOB INFORMATION:
KAWNEER COMPANY, INC.
555 GUTHRIDGE COURT
NORCROSS, GA 30092
770-449-5555

CONSULTANTS
W. W. SCHAEFER ENGINEERING & CONSULTING, P.A. (REG. NO. F-14980)
7480 150TH COURT NORTH
PALM BEACH GARDENS, FL 33418
PHONE: 561-744-3424

CERTIFICATION: STATE OF TEXAS, WARREN W. SCHAEFER, P.E. P.E. NO. 113497, MAR 20 2013, PROFESSIONAL ENGINEER

DRAWING NO. 1789T | REV.

SHEET NO. 5 OF 18

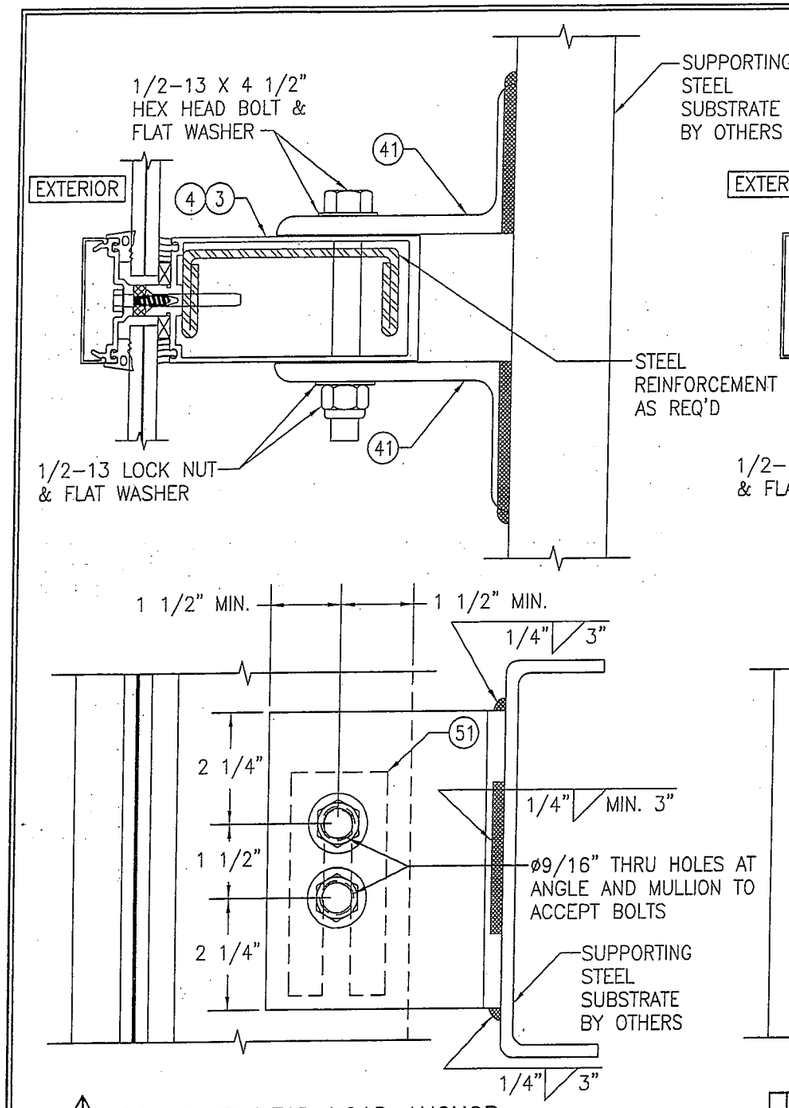

STANDARD DEAD LOAD ANCHOR
SCALE: 1/3 FULL

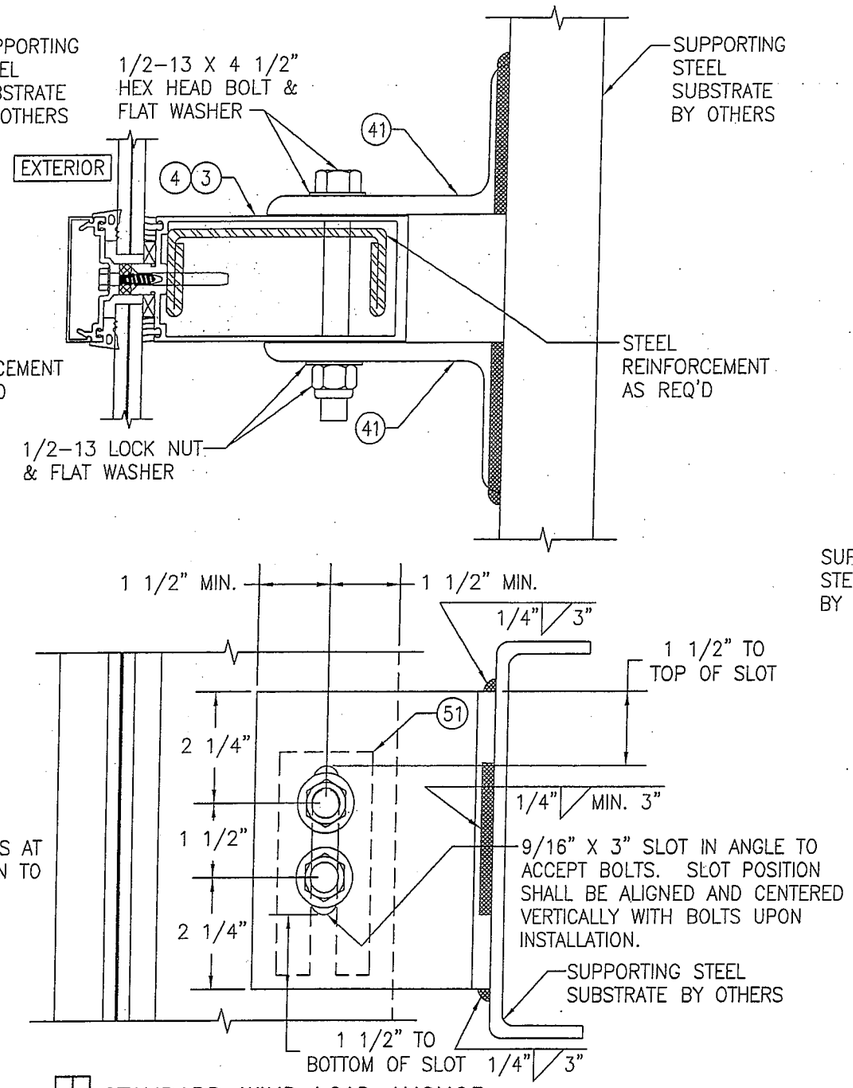

STANDARD WIND LOAD ANCHOR
SCALE: 1/3 FULL

NOTE: ALL 1/2" BOLTS CONNECTING ANGLES TO MULLIONS SHALL BE GRADE 5 STEEL OR 300 SERIES STAINLESS STEEL.

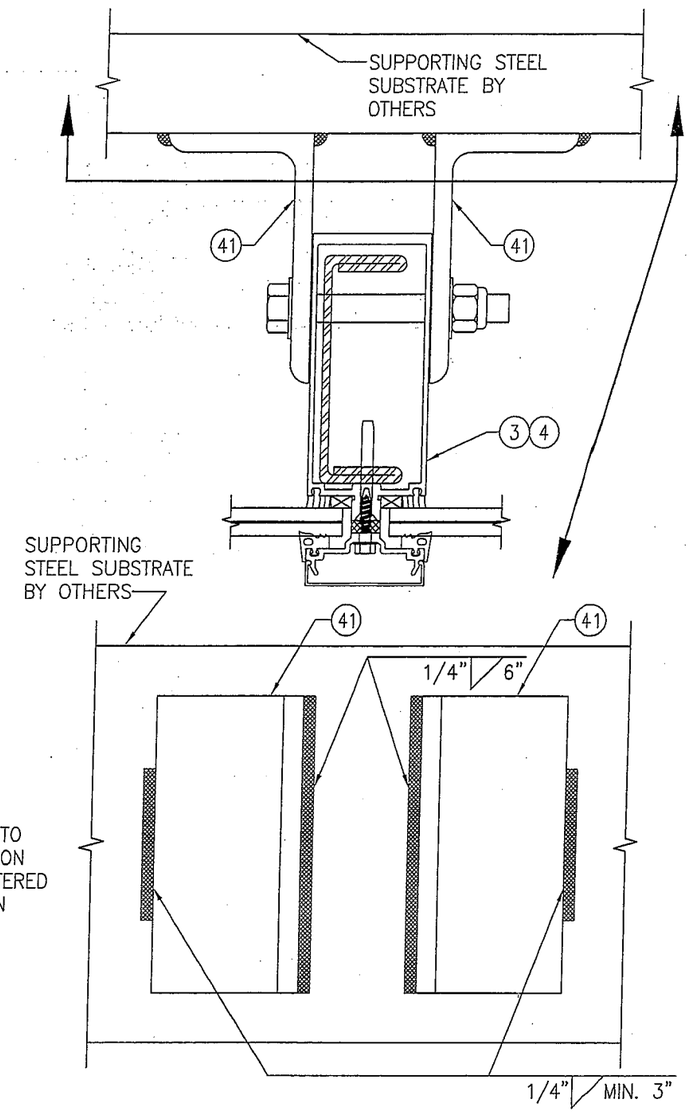

ALTERNATE WELD DETAIL FOR WIND & DEAD LOAD ANCHORS
SCALE: 1/3 FULL

STATE OF TEXAS
WARREN W. SCHAEFER
113497
LICENSED PROFESSIONAL ENGINEER

DRAWN BY: W.W.S.	CHECKED BY: W.W.S.
PLOT: 1=3	DATE: 03/19/13

NO.	REVISION DESCRIPTION	BY	DATE

DRAWING TITLE
7 13/16" DEEP 1600 SYSTEM 1 CURTAIN WALL (L.M.I.)

JOB INFORMATION:
KAWNEER COMPANY, INC.
555 GUTHRIDGE COURT
NORCROSS, GA 30092
770-449-5555

CONSULTANTS
W. W. SCHAEFER ENGINEERING & CONSULTING, P.A. (REG. NO. F-14980)
7480 150TH COURT NORTH
PALM BEACH GARDENS, FL 33418
PHONE: 561-744-3424

CERTIFICATION
MAR 20 2013
WARREN W. SCHAEFER, P.E.
P.E. NO. 113497

DRAWING NO. 1789T
REV.
SHEET NO. 6 OF 18

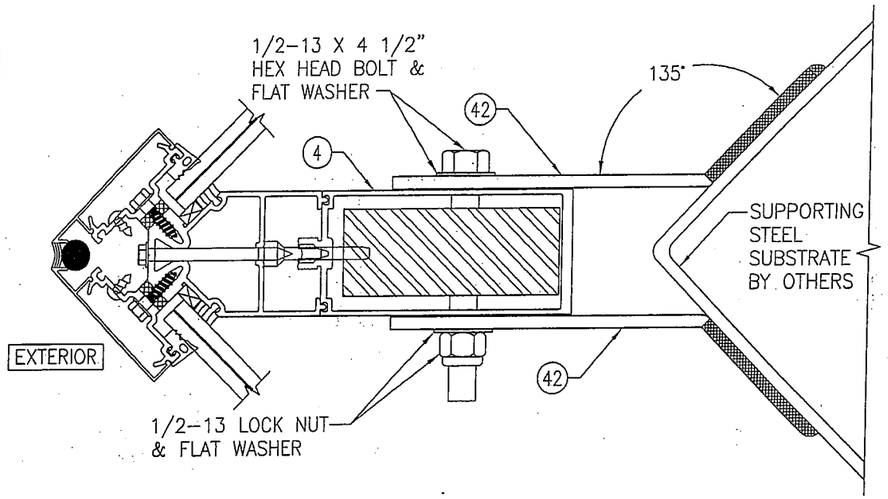

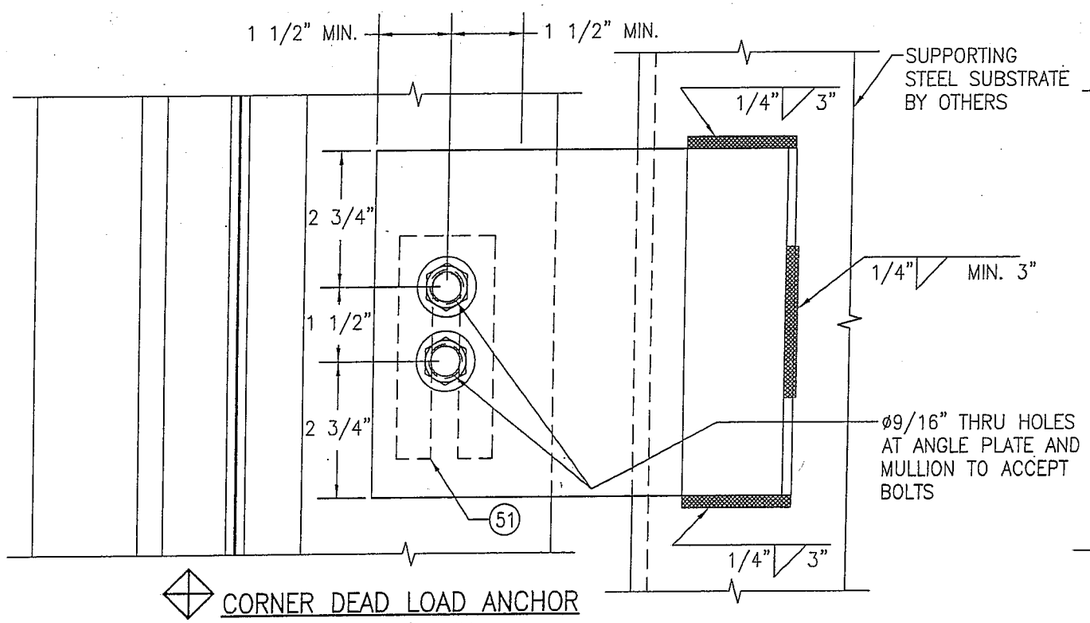

CORNER DEAD LOAD ANCHOR
SCALE: 1/3 FULL

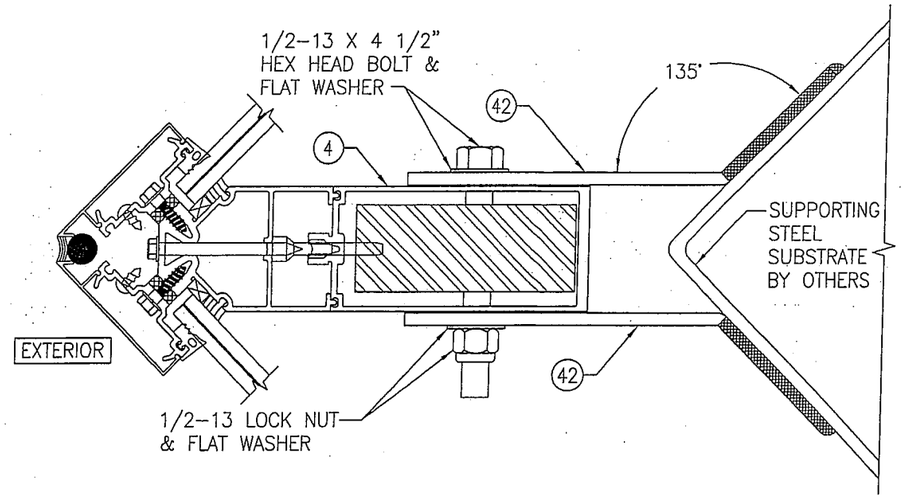

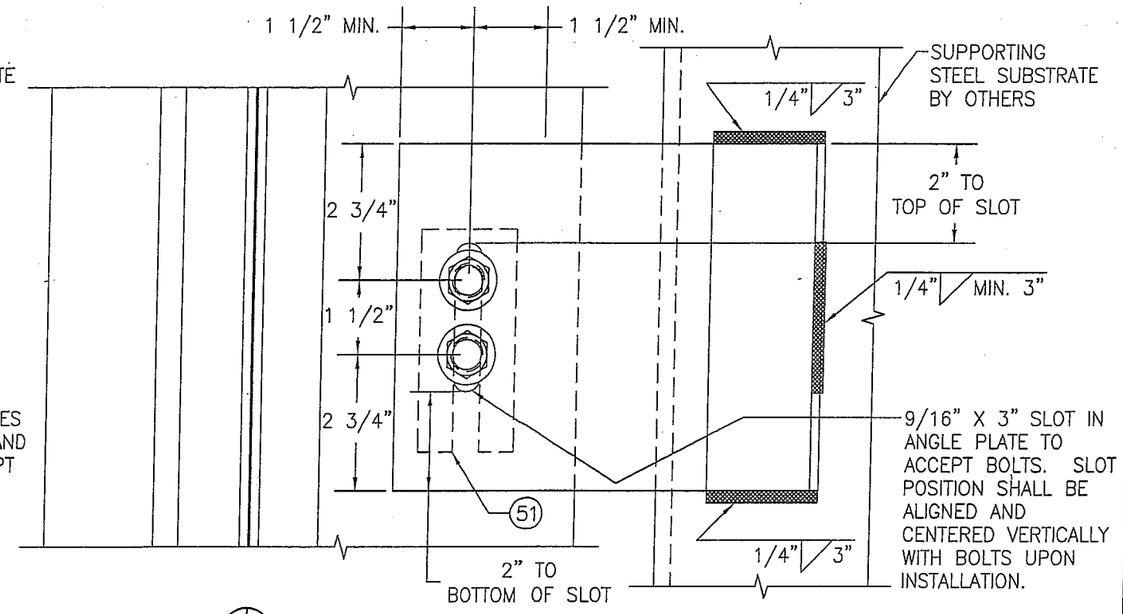

CORNER WIND LOAD ANCHOR
SCALE: 1/3 FULL

NOTE: ALL 1/2" BOLTS CONNECTING ANGLES TO MULLIONS SHALL BE GRADE 5 STEEL OR 300 SERIES STAINLESS STEEL.

FOR ALTERNATE WELDING OF ANGLES TO SUBSTRATE, SEE "ALTERNATE WELD DETAIL" ON SHEET 6.

STATE OF TEXAS
WARREN W. SCHAEFER
113497
LICENSED PROFESSIONAL ENGINEER

DRAWN BY: W.W.S.	CHECKED BY: W.W.S.
PLOT: 1=3	DATE: 03/19/13

NO.	REVISION DESCRIPTION	BY	DATE

DRAWING TITLE
7 13/16" DEEP 1600 SYSTEM 1 CURTAIN WALL (L.M.I.)

JOB INFORMATION:
KAWNEER COMPANY, INC.
555 GUTHRIDGE COURT
NORCROSS, GA 30092
770-449-5555

CONSULTANTS
W. W. SCHAEFER ENGINEERING & CONSULTING, P.A. (REG. NO. F-14980)
7480 150TH COURT NORTH
PALM BEACH GARDENS, FL 33418
PHONE: 561-744-3424

CERTIFICATION
MAR 20 2013
WARREN W. SCHAEFER, P.E.
P.E. NO. 113497

DRAWING NO. 1789T
REV.

SHEET NO. 7 OF 18

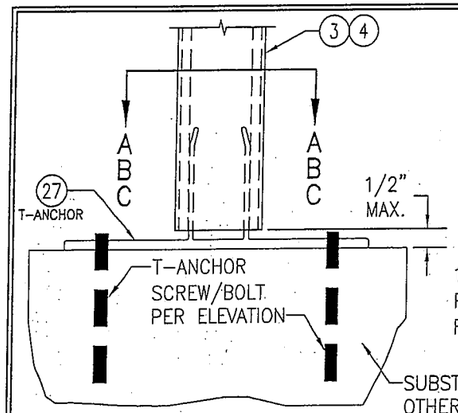

STANDARD T-ANCHOR
SCALE: 1/4 FULL

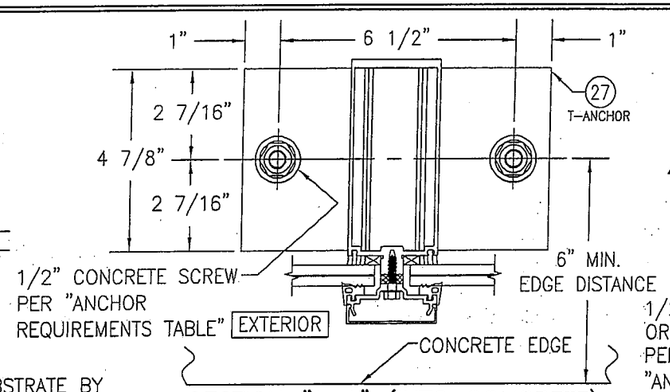

SECTION "A-A" (INTO CONCRETE)
SCALE: 1/4 FULL

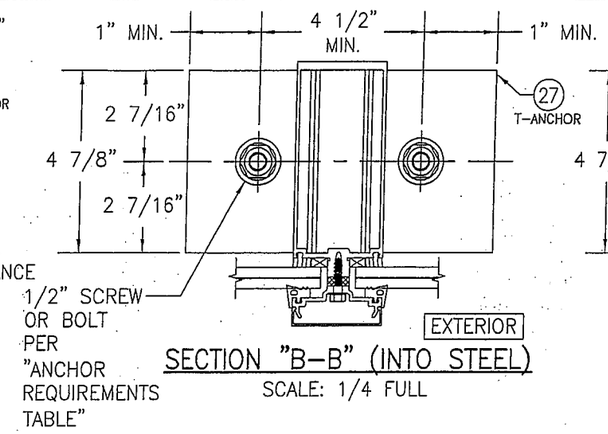

SECTION "B-B" (INTO STEEL)
SCALE: 1/4 FULL

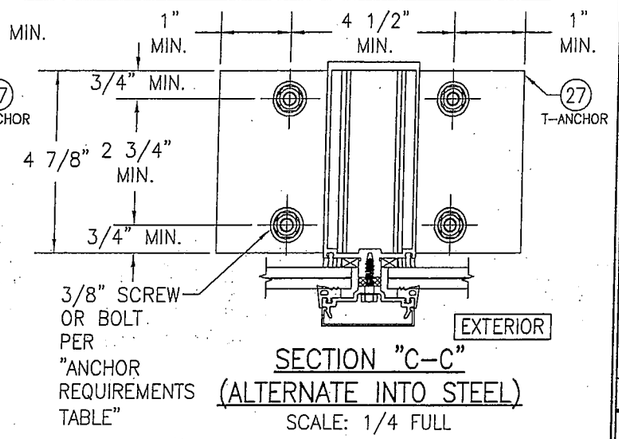

SECTION "C-C"
(ALTERNATE INTO STEEL)
SCALE: 1/4 FULL

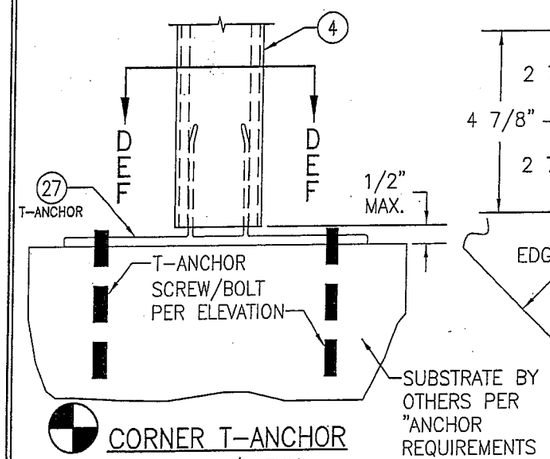

CORNER T-ANCHOR
SCALE: 1/4 FULL

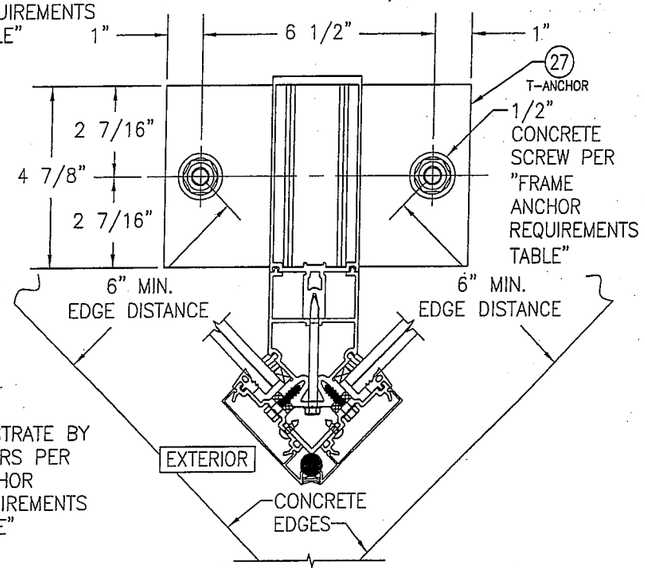

SECTION "D-D" (INTO CONCRETE)
SCALE: 1/4 FULL

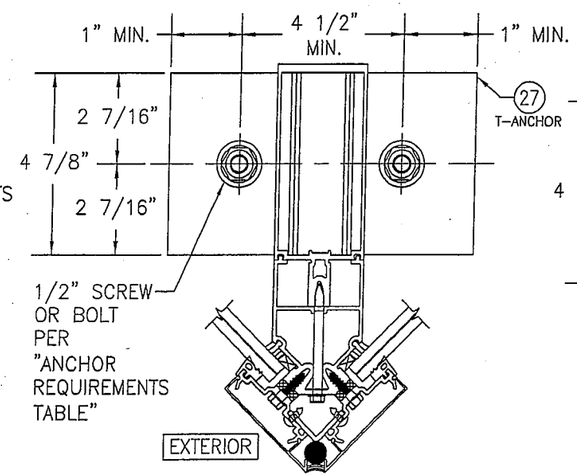

SECTION "E-E" (INTO STEEL)
SCALE: 1/4 FULL

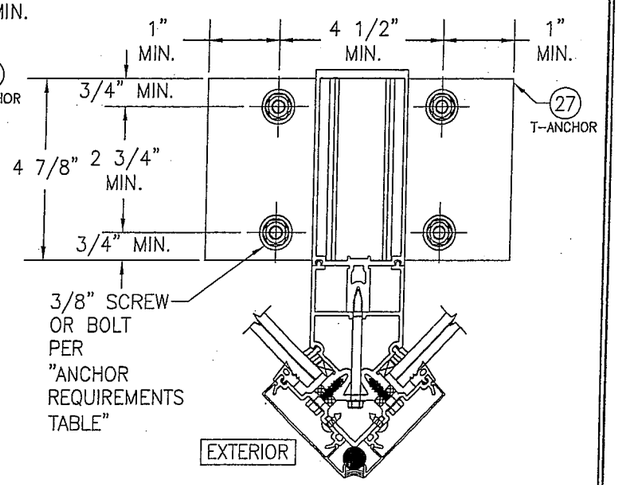

SECTION "F-F"
(ALTERNATE INTO STEEL)
SCALE: 1/4 FULL

THIS SHEET IS DEDICATED TO MULTI-SPAN & REINFORCED SINGLE-SPAN ANCHOR CONDITIONS

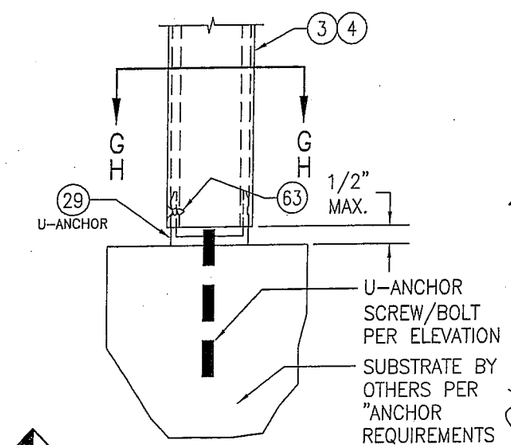

DOOR JAMB U-ANCHOR
SCALE: 1/4 FULL

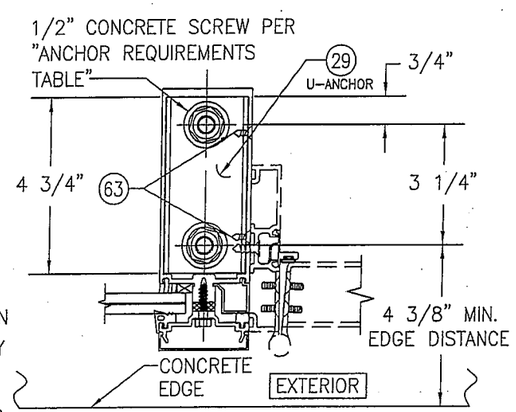

SECTION "G-G" (INTO CONCRETE)
SCALE: 1/4 FULL

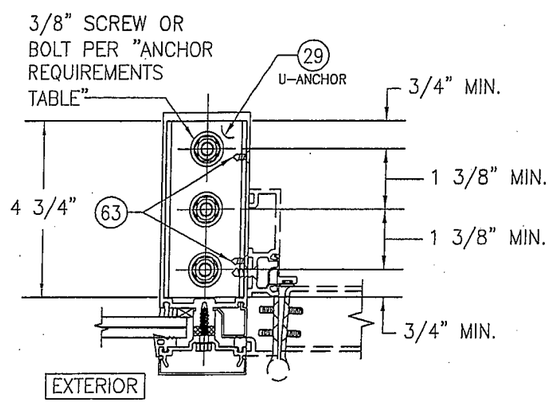

SECTION "H-H" (INTO STEEL)
SCALE: 1/4 FULL

NO.	REVISION DESCRIPTION	BY	DATE

DRAWN BY: W.W.S. | CHECKED BY: W.W.S.
PLOT: 1=4 | DATE: 03/19/13

DRAWING TITLE: 7 13/16" DEEP 1600 SYSTEM 1 CURTAIN WALL (L.M.I.)

JOB INFORMATION: KAWNEER COMPANY, INC. 555 GUTHRIDGE COURT NORCROSS, GA 30092 770-449-5555

CONSULTANTS: W. W. SCHAEFER ENGINEERING & CONSULTING, P.A. (REG. NO. F-14980) 7480 150TH COURT NORTH PALM BEACH GARDENS, FL 33418 PHONE: 561-744-3424

CERTIFICATION: MAR 20 2013
WARREN W. SCHAEFER, P.E. P.E. NO. 113497

STATE OF TEXAS — WARREN W. SCHAEFER — 113497 — LICENSED PROFESSIONAL ENGINEER

DRAWING NO. 1789T | REV.
SHEET NO. 8 OF 18

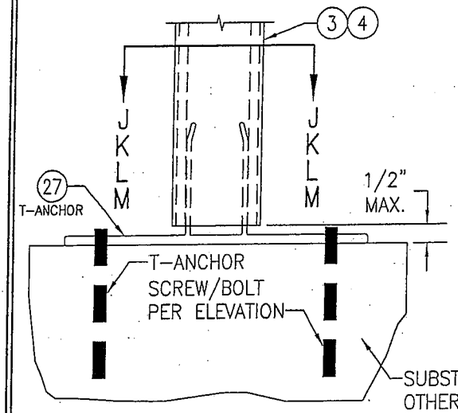

STANDARD T-ANCHOR
SCALE: 1/4 FULL

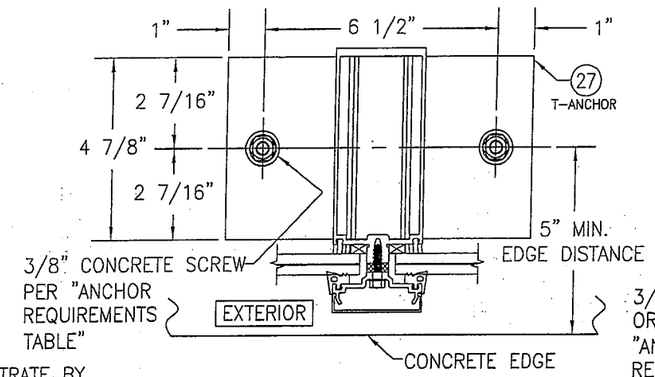

SECTION "J-J" (INTO CONCRETE)
SCALE: 1/4 FULL

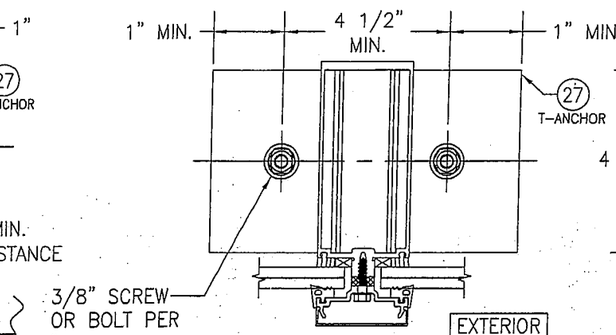

SECTION "K-K" (INTO STEEL)
SCALE: 1/4 FULL

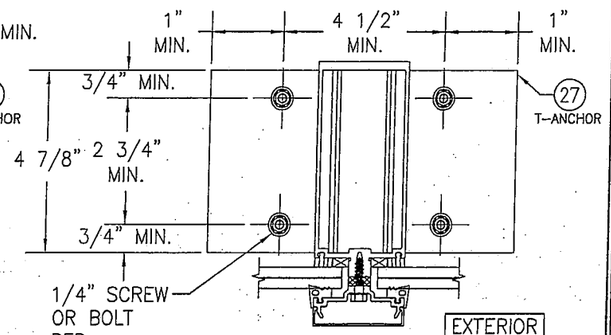

SECTION "L-L"
(ALTERNATE INTO STEEL)
SCALE: 1/4 FULL

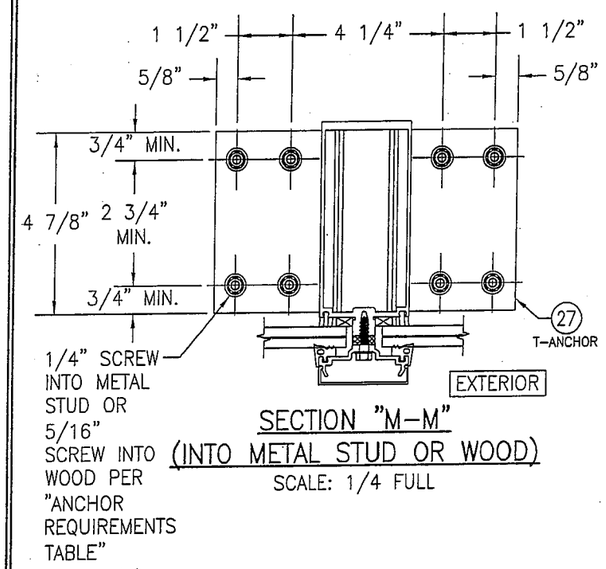

SECTION "M-M"
(INTO METAL STUD OR WOOD)
SCALE: 1/4 FULL

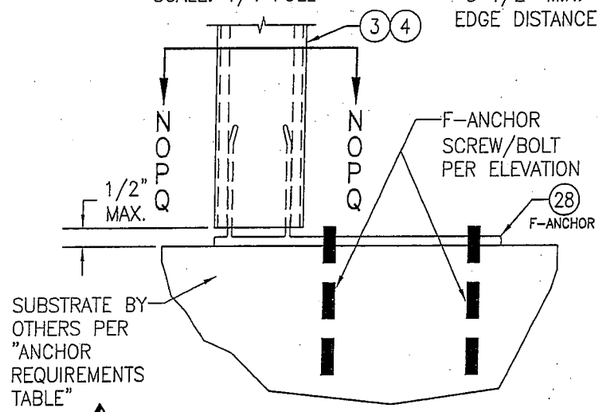

F-ANCHOR (FRAME MEMBER ENDS)
SCALE: 1/4 FULL

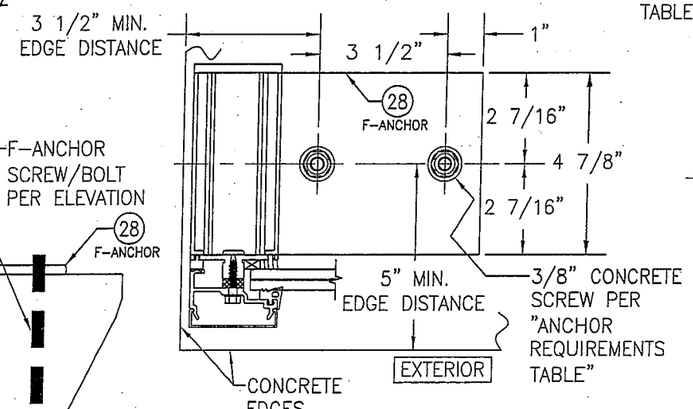

SECTION "N-N" (INTO CONCRETE)
SCALE: 1/4 FULL

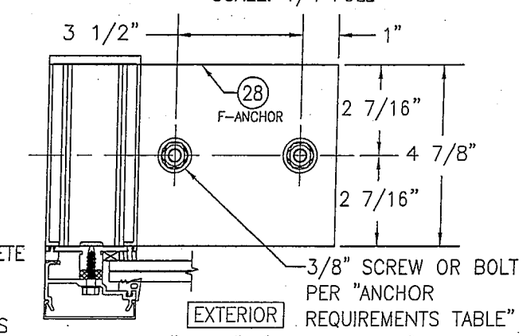

SECTION "O-O" (INTO STEEL)
SCALE: 1/4 FULL

THIS SHEET IS DEDICATED TO NON-REINFORCED SINGLE-SPAN ANCHOR CONDITIONS

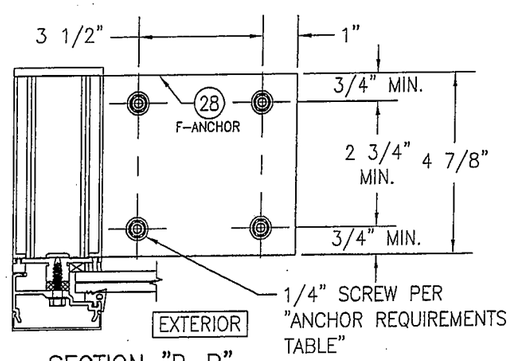

SECTION "P-P"
(ALTERNATE INTO STEEL)
SCALE: 1/4 FULL

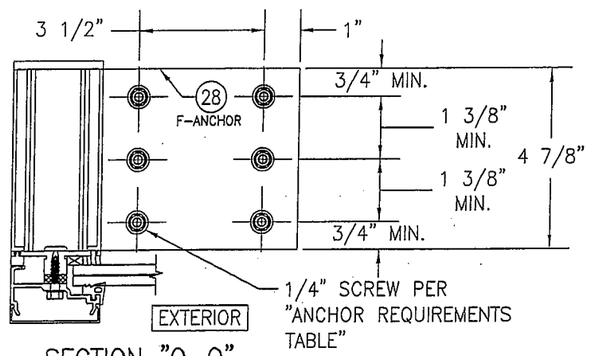

SECTION "Q-Q"
(INTO METAL STUD OR WOOD)
SCALE: 1/4 FULL

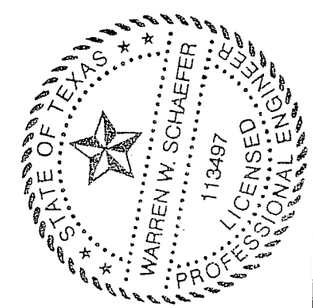

DRAWN BY: W.W.S.	CHECKED BY: W.W.S.
PLOT: 1=4	DATE: 03/19/13

NO.	REVISION DESCRIPTION	BY	DATE

DRAWING TITLE
7 13/16" DEEP 1600 SYSTEM 1 CURTAIN WALL (L.M.I.)

JOB INFORMATION:
KAWNEER COMPANY, INC.
555 GUTHRIDGE COURT
NORCROSS, GA 30092
770-449-5555

CONSULTANTS
W. W. SCHAEFER ENGINEERING & CONSULTING, P.A. (REG. NO. F-14980)
7480 150TH COURT NORTH
PALM BEACH GARDENS, FL 33418
PHONE: 561-744-3424

CERTIFICATION
MAR 20 2013
WARREN W. SCHAEFER, P.E.
P.E. NO. 113497

DRAWING NO. 1789T
REV.

SHEET NO. 9 OF 18

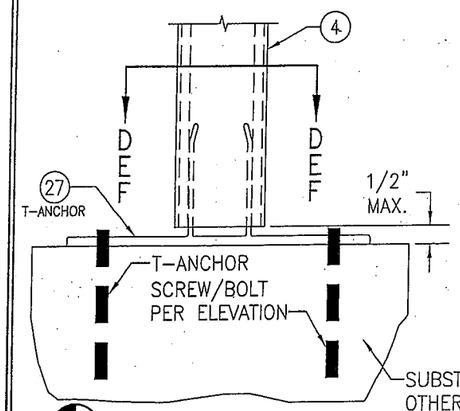

CORNER T-ANCHOR
SCALE: 1/4 FULL

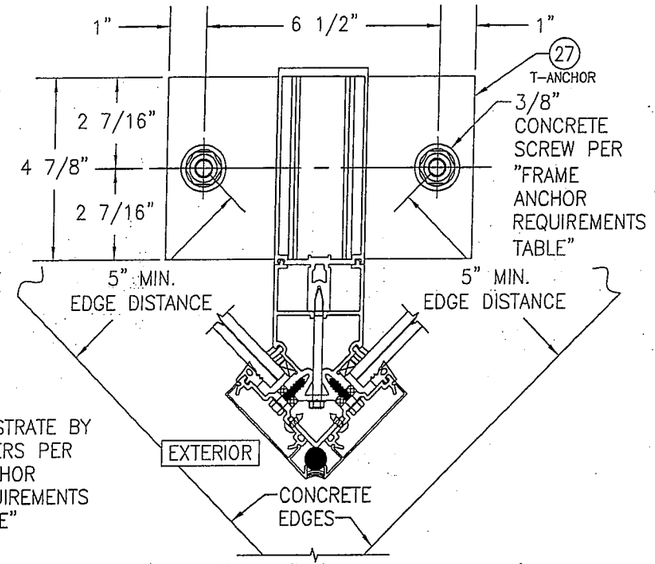

SECTION "W-W" (INTO CONCRETE)
SCALE: 1/4 FULL

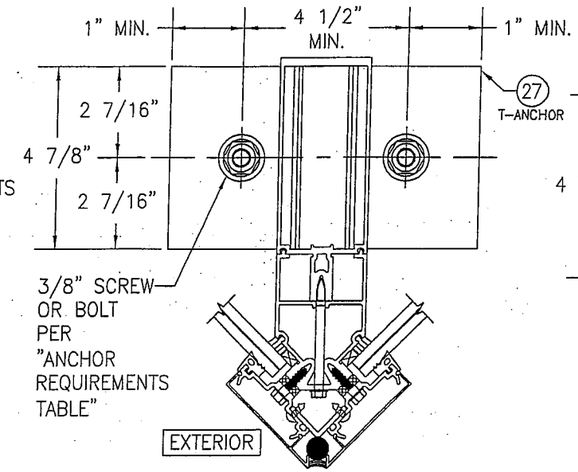

SECTION "X-X" (INTO STEEL)
SCALE: 1/4 FULL

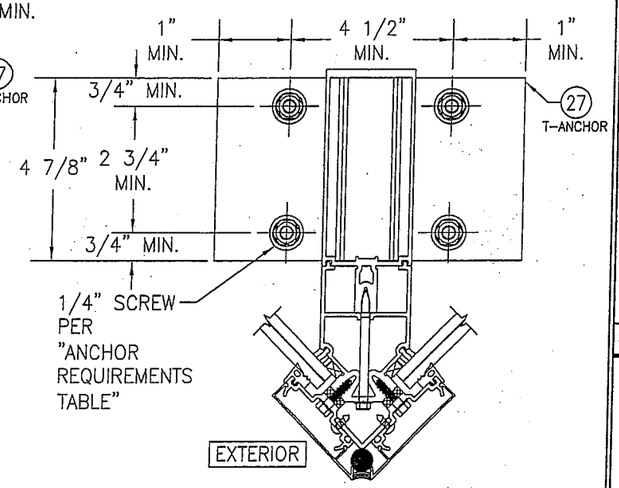

SECTION "Y-Y"
(ALTERNATE INTO STEEL)
SCALE: 1/4 FULL

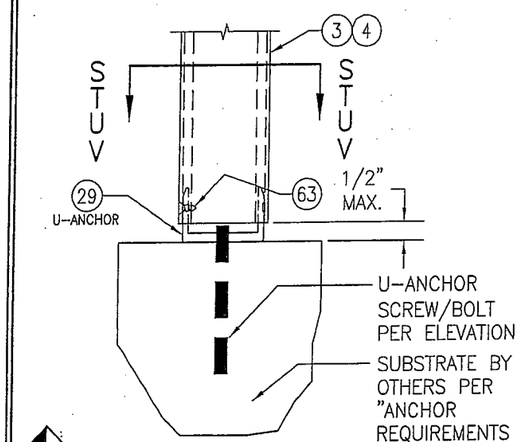

DOOR JAMB U-ANCHOR
SCALE: 1/4 FULL

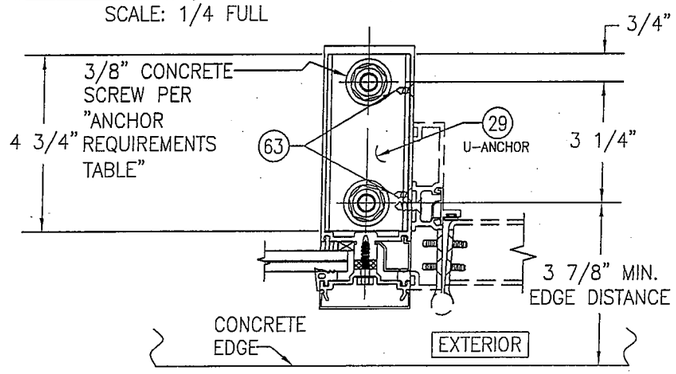

SECTION "S-S"
(INTO CONCRETE AT
INTERMEDIATE MEMBER)
SCALE: 1/4 FULL

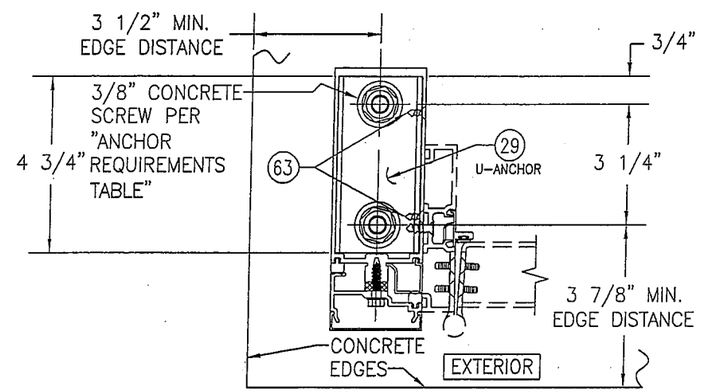

SECTION "T-T"
(INTO CONCRETE AT
PERIMETER SIDE JAMB MEMBER)
SCALE: 1/4 FULL

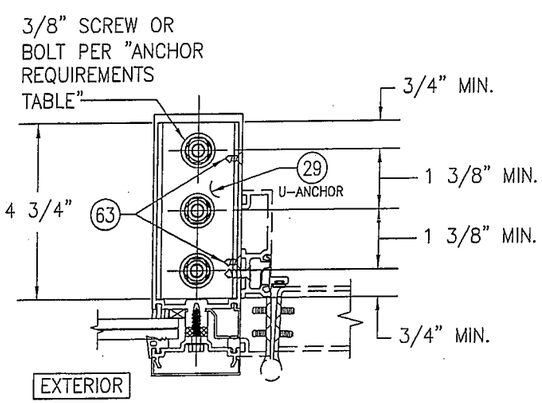

SECTION "U-U" (INTO STEEL)
SCALE: 1/4 FULL

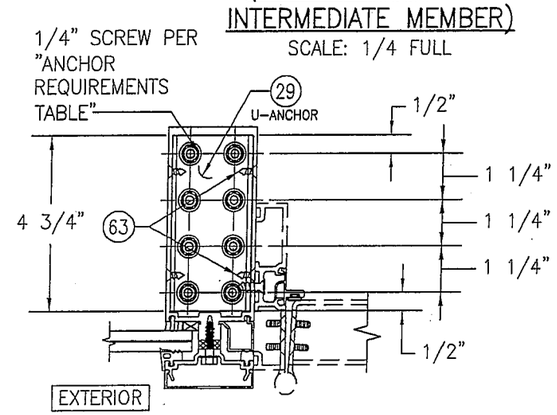

SECTION "V-V"
(INTO METAL STUD OR WOOD)
SCALE: 1/4 FULL

THIS SHEET IS DEDICATED TO NON-REINFORCED SINGLE-SPAN ANCHOR CONDITIONS

STATE OF TEXAS
WARREN W. SCHAEFER
113497
LICENSED
PROFESSIONAL ENGINEER

DRAWN BY: W.W.S.	CHECKED BY: W.W.S.
PLOT: 1=4	DATE: 03/19/13

NO.	REVISION DESCRIPTION	BY	DATE

DRAWING TITLE
7 13/16" DEEP 1600 SYSTEM 1 CURTAIN WALL (L.M.I.)

JOB INFORMATION:
KAWNEER COMPANY, INC.
555 GUTHRIDGE COURT
NORCROSS, GA 30092
770-449-5555

CONSULTANTS
W. W. SCHAEFER ENGINEERING & CONSULTING, P.A. (REG. NO. F-14980)
7480 150TH COURT NORTH
PALM BEACH GARDENS, FL 33418
PHONE: 561-744-3424

CERTIFICATION
MAR 20 2013
WARREN W. SCHAEFER, P.E.
P.E. NO. 113497

DRAWING NO. 1789T
REV.

SHEET NO. 10 OF 18

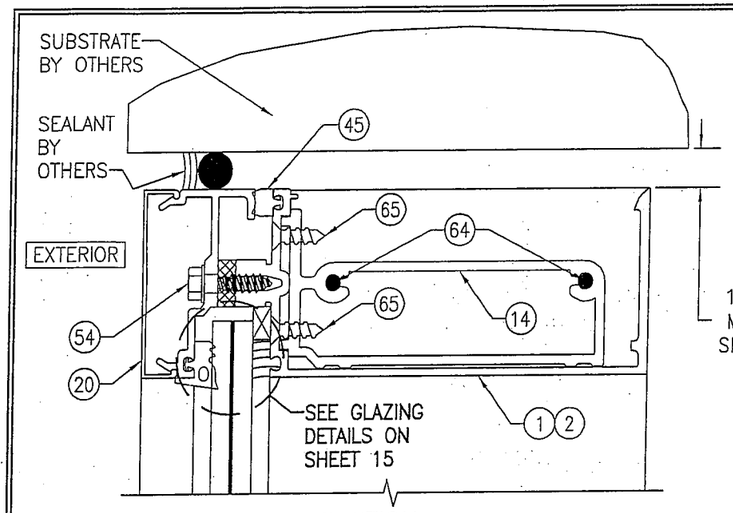

SECTION A1/11
SCALE: 1/2 FULL

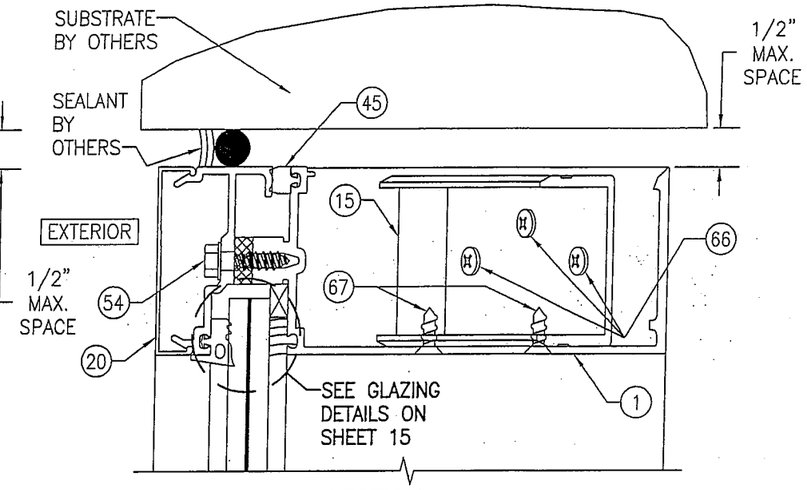

SECTION A2/11
SCALE: 1/2 FULL

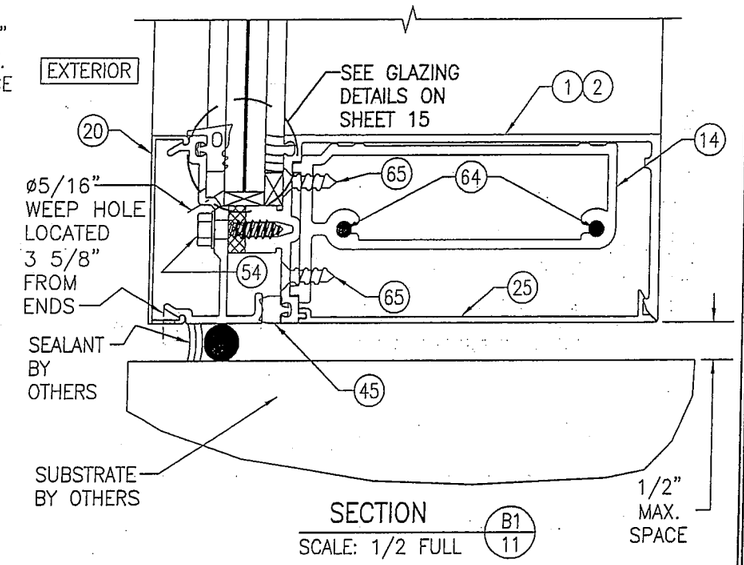

SECTION B1/11
SCALE: 1/2 FULL

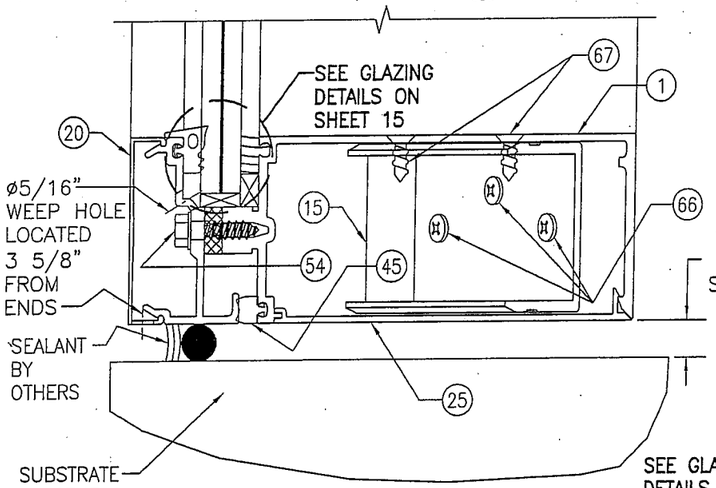

SECTION B2/11
SCALE: 1/2 FULL

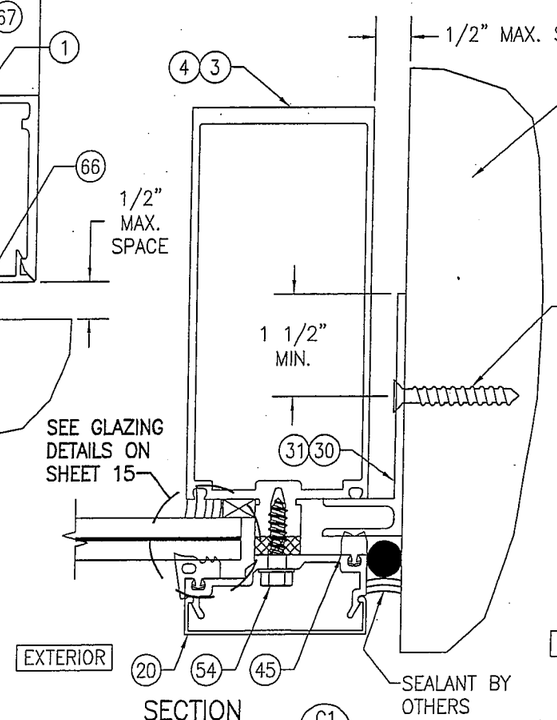

SECTION C1/11
SCALE: 1/2 FULL
(SIDE JAMB F-ANCHOR TO STEEL AND CONCRETE)

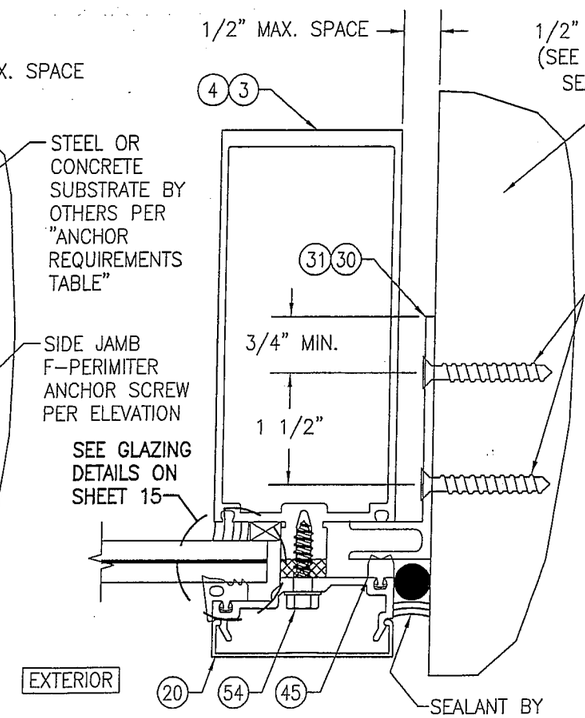

SECTION C2/11
SCALE: 1/2 FULL
(SIDE JAMB F-ANCHOR TO WOOD OR METAL STUD)

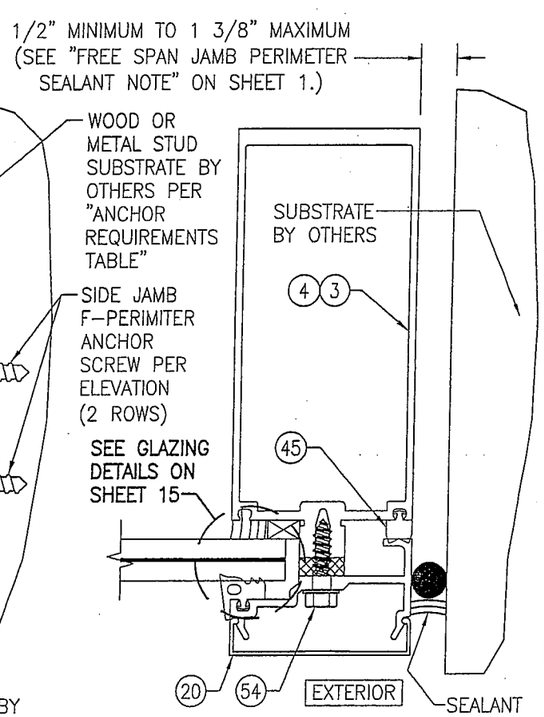

SECTION C3/11
SCALE: 1/2 FULL
(NO SIDE JAMB F-ANCHOR)

DRAWN BY: W.W.S.	CHECKED BY: W.W.S.
PLOT: 1=2	DATE: 03/19/13

NO.	REVISION DESCRIPTION	BY	DATE

DRAWING TITLE
7 13/16" DEEP 1600 SYSTEM 1 CURTAIN WALL (L.M.I.)

JOB INFORMATION:
KAWNEER COMPANY, INC.
555 GUTHRIDGE COURT
NORCROSS, GA 30092
770-449-5555

CONSULTANTS
W. W. SCHAEFER ENGINEERING & CONSULTING, P.A. (REG. NO. F-14980)
7480 150TH COURT NORTH
PALM BEACH GARDENS, FL 33418
PHONE: 561-744-3424

CERTIFICATION
MAR 20 2013
WARREN W. SCHAEFER, P.E.
P.E. NO. 113497

STATE OF TEXAS
WARREN W. SCHAEFER
113497
LICENSED PROFESSIONAL ENGINEER

DRAWING NO. 1789T
REV.
SHEET NO. 11 OF 18

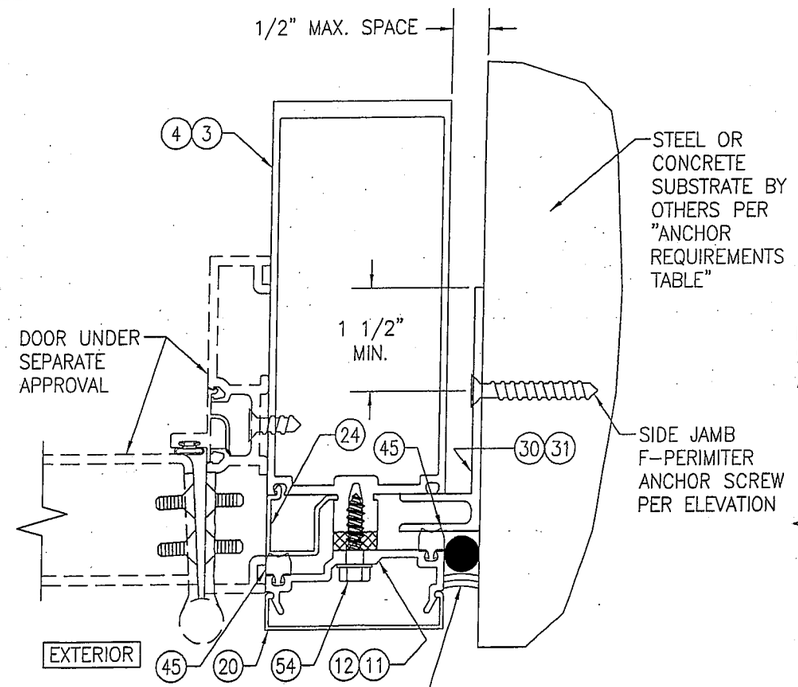

SECTION D1/12
SCALE: 1/2 FULL
(SIDE JAMB F-ANCHOR TO STEEL AND CONCRETE)

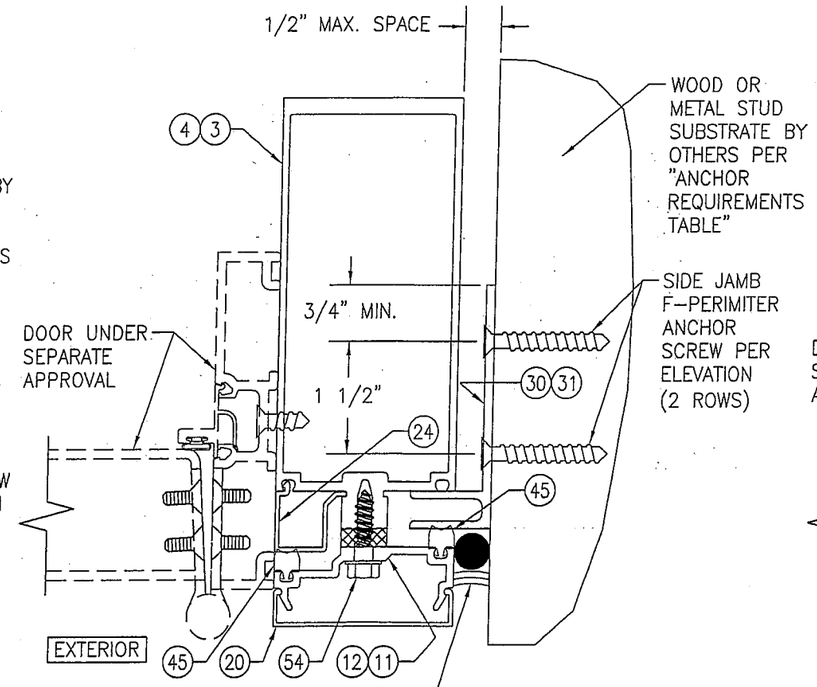

SECTION D2/12
SCALE: 1/2 FULL
(SIDE JAMB F-ANCHOR TO WOOD OR METAL STUD)

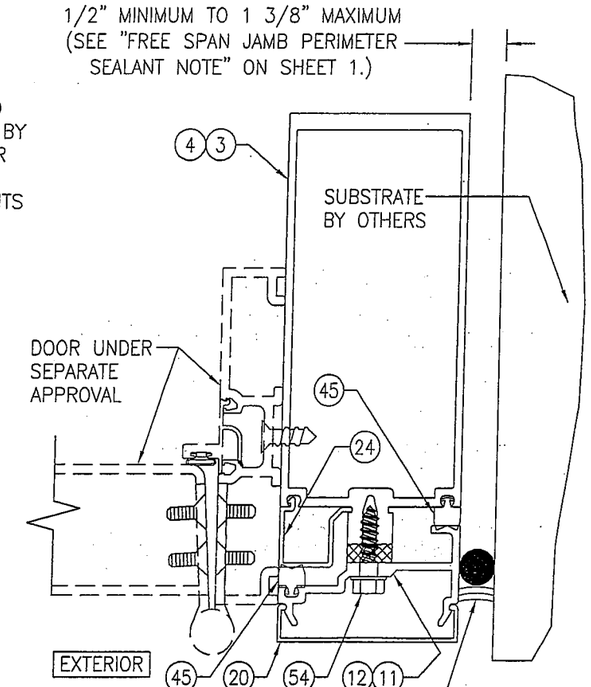

SECTION D3/12
SCALE: 1/2 FULL
(NO SIDE JAMB F-ANCHOR)

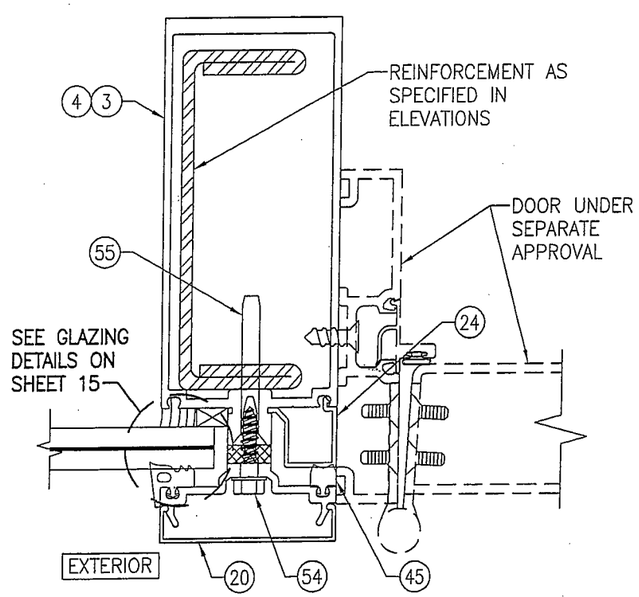

SECTION E/12
SCALE: 1/2 FULL

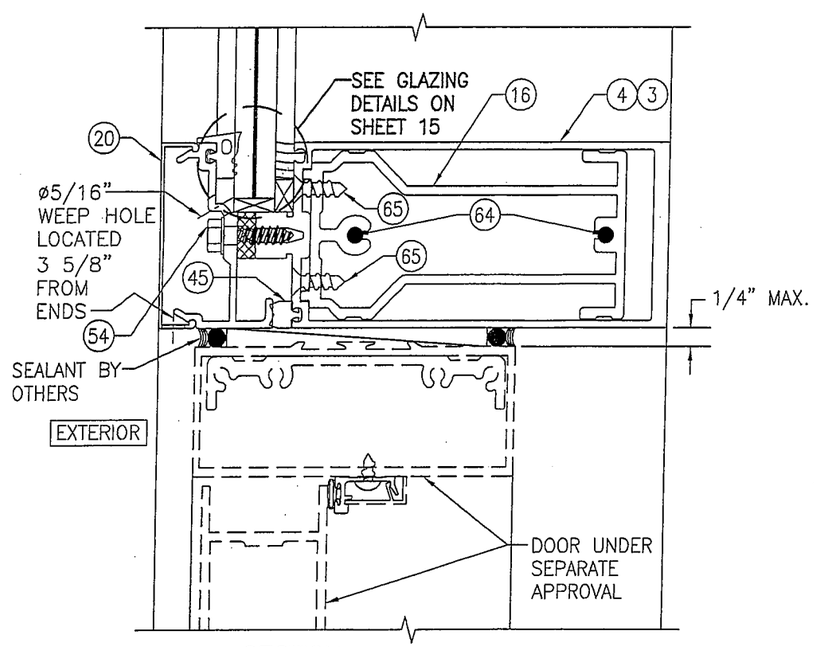

SECTION F/12
SCALE: 1/2 FULL

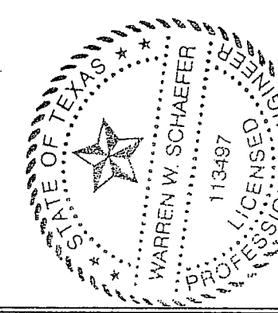

DRAWN BY: W.W.S.	CHECKED BY: W.W.S.
PLOT: 1=2	DATE: 03/19/13

NO.	REVISION DESCRIPTION	BY	DATE

DRAWING TITLE
7 13/16" DEEP 1600 SYSTEM 1 CURTAIN WALL (L.M.I.)

JOB INFORMATION:
KAWNEER COMPANY, INC.
555 GUTHRIDGE COURT
NORCROSS, GA 30092
770-449-5555

CONSULTANTS
W. W. SCHAEFER ENGINEERING & CONSULTING, P.A. (REG. NO. F-14980)
7480 150TH COURT NORTH
PALM BEACH GARDENS, FL 33418
PHONE: 561-744-3424

CERTIFICATION
MAR 20 2013
WARREN W. SCHAEFER, P.E.
P.E. NO. 113497

DRAWING NO. 1789T
REV.
SHEET NO. 12 OF 18

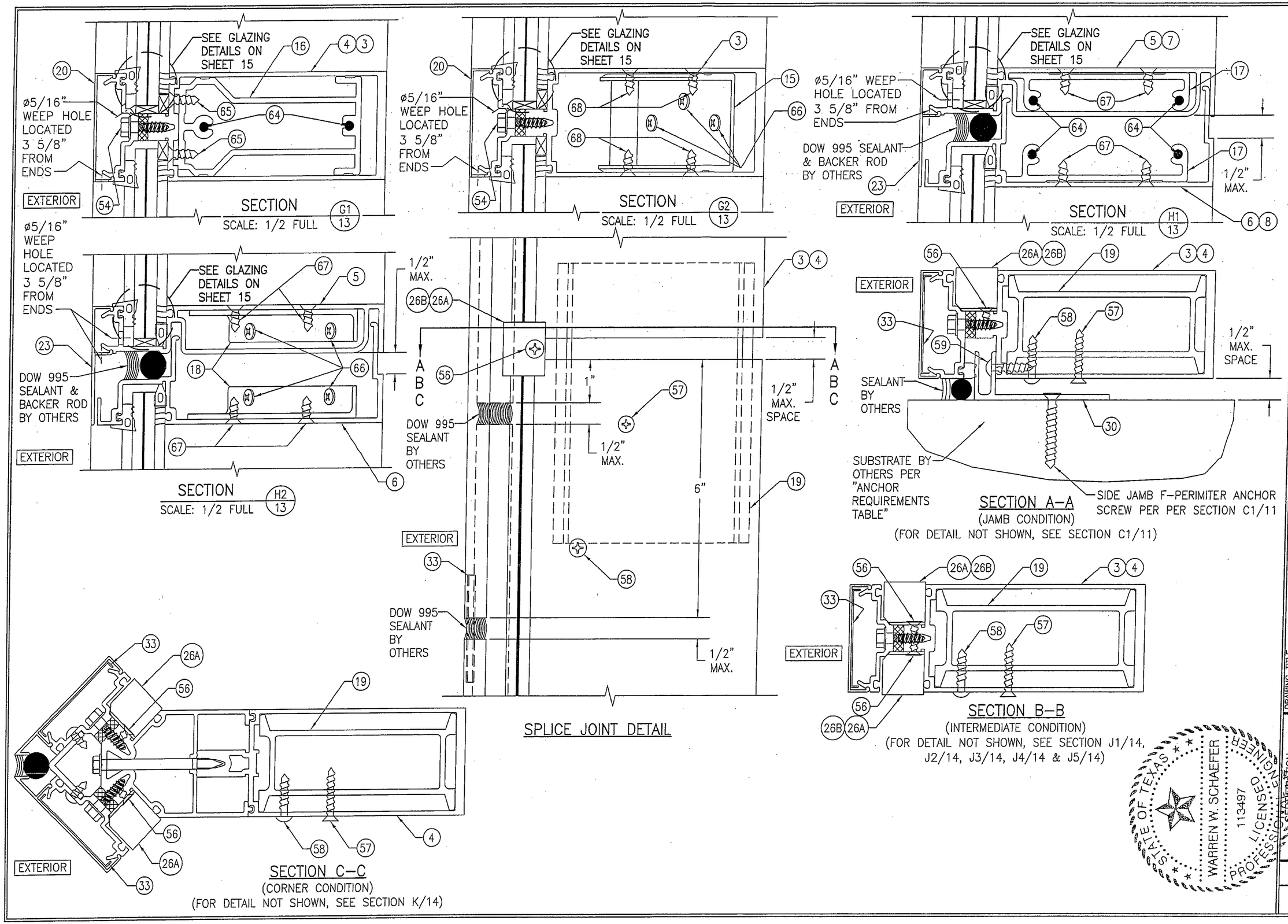

DRAWN BY: W.W.S.	CHECKED BY: W.W.S.
PLOT: 1=2	DATE: 03/19/13

NO.	REVISION DESCRIPTION	BY	DATE

DRAWING TITLE
7 13/16" DEEP 1600 SYSTEM 1 CURTAIN WALL (L.M.I.)

JOB INFORMATION:
KAWNEER COMPANY, INC.
555 GUTHRIDGE COURT
NORCROSS, GA 30092
770-449-5555

CONSULTANTS
W. W. SCHAEFER ENGINEERING & CONSULTING, P.A. (REG. NO. F-14980)
7480 150TH COURT NORTH
PALM BEACH GARDENS, FL 33418
PHONE: 561-744-3424

STATE OF TEXAS
WARREN W. SCHAEFER
113497
LICENSED PROFESSIONAL ENGINEER

MAR 20 2013

CERTIFICATION
WARREN W. SCHAEFER, P.E.
P.E. NO. 113497

DRAWING NO. 1789T
REV.

SHEET NO. 13 OF 18

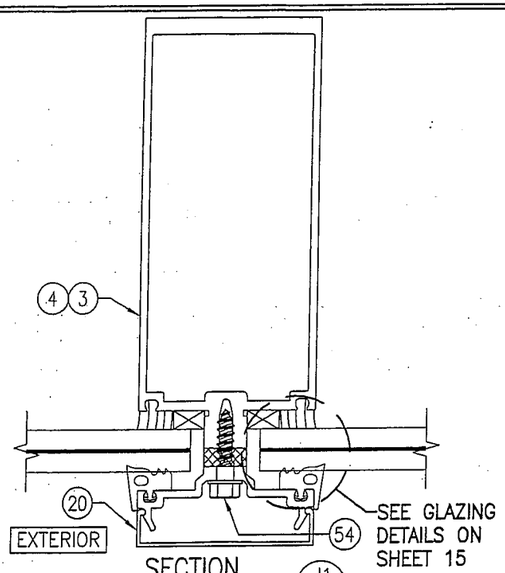

SECTION J1/14
SCALE: 1/2 FULL

VERTICAL FRAME MEMBER WITH NO REINFORCEMENT

I = 13.768 IN^4
S = 4.157 IN^3

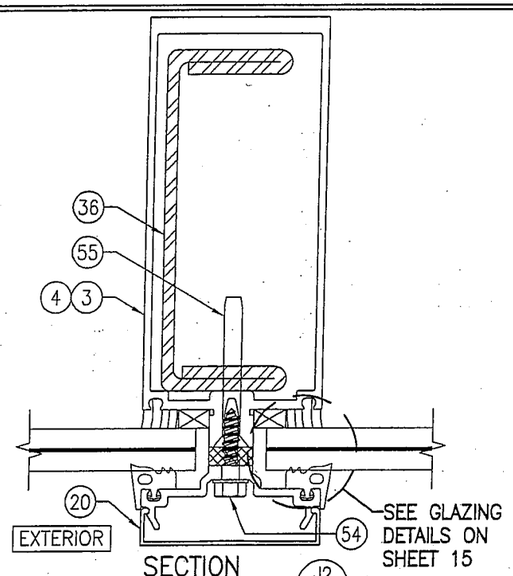

SECTION J2/14
SCALE: 1/2 FULL

VERTICAL FRAME MEMBER WITH REINFORCEMENT R1

I = 30.629 IN^4
S = 8.313 IN^3
(TRANSFORMED SECTION PROPERTIES IN TERMS OF ALUMINUM)

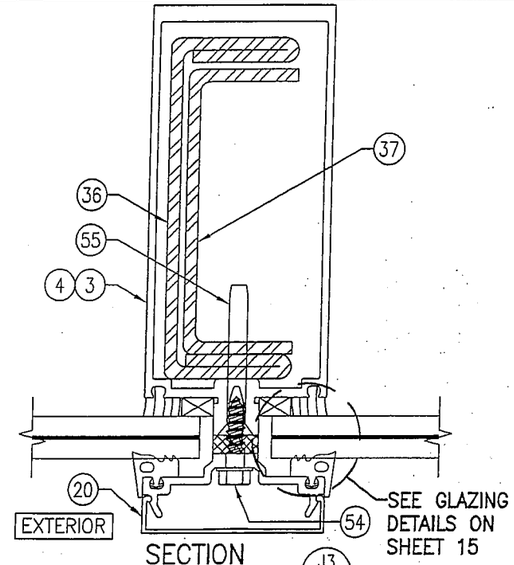

SECTION J3/14
SCALE: 1/2 FULL

VERTICAL FRAME MEMBER WITH REINFORCEMENT R2

I = 37.021 IN^4
S = 9.926 IN^3
(TRANSFORMED SECTION PROPERTIES IN TERMS OF ALUMINUM)

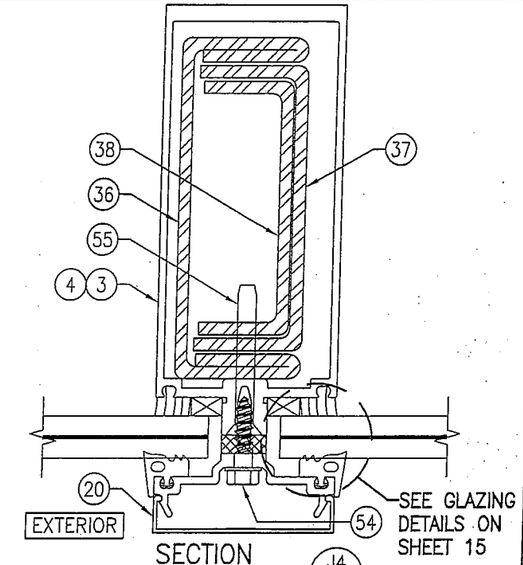

SECTION J4/14
SCALE: 1/2 FULL

VERTICAL FRAME MEMBER WITH REINFORCEMENT R3

I = 41.202 IN^4
S = 11.01 IN^3
(TRANSFORMED SECTION PROPERTIES IN TERMS OF ALUMINUM)

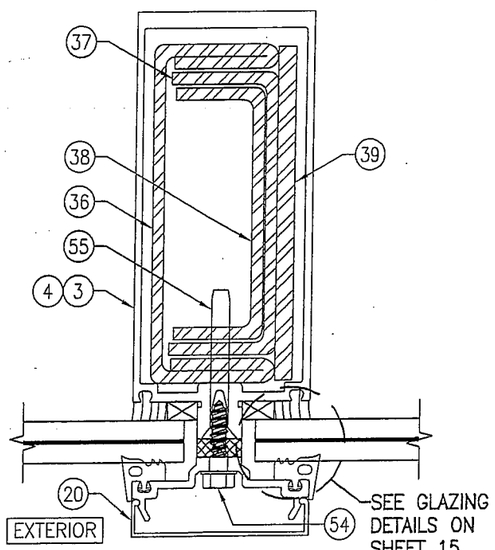

SECTION J5/14
SCALE: 1/2 FULL

VERTICAL FRAME MEMBER WITH REINFORCEMENT R4

I = 46.707 IN^4
S = 12.387 IN^3
(TRANSFORMED SECTION PROPERTIES IN TERMS OF ALUMINUM)

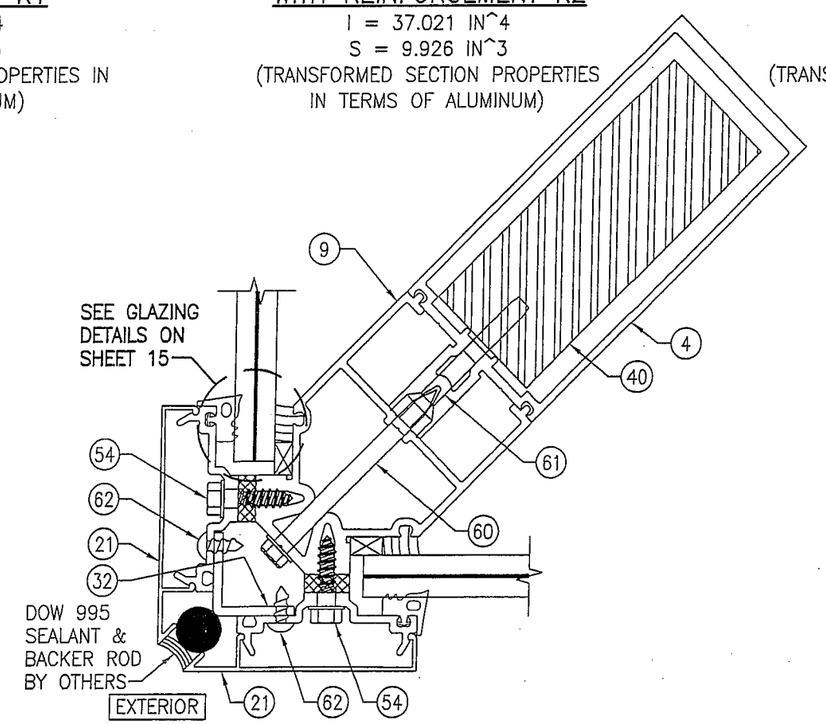

SECTION K/14
SCALE: 1/2 FULL

VERTICAL CORNER/FRAME MEMBER WITH REINFORCEMENT R5

I = 116.75 IN^4
S = 17.296 IN^3
(TRANSFORMED SECTION PROPERTIES IN TERMS OF ALUMINUM)

STATE OF TEXAS
WARREN W. SCHAEFER
113497
LICENSED PROFESSIONAL ENGINEER

DRAWN BY: W.W.S.	CHECKED BY: W.W.S.
PLOT: 1=2	DATE: 03/19/13

NO.	REVISION DESCRIPTION	BY	DATE

DRAWING TITLE
7 13/16" DEEP 1600 SYSTEM 1 CURTAIN WALL (L.M.I.)

JOB INFORMATION:
KAWNEER COMPANY, INC.
555 GUTHRIDGE COURT
NORCROSS, GA 30092
770-449-5555

CONSULTANTS
W. W. SCHAEFER ENGINEERING & CONSULTING, P.A. (REG. NO. F-14980)
7480 150TH COURT NORTH
PALM BEACH GARDENS, FL 33418
PHONE: 561-744-3424

CERTIFICATION
MAR 20 2013
WARREN W. SCHAEFER, P.E.
P.E. NO. 113497

DRAWING NO. 1789T
REV.

SHEET NO. 14 OF 18

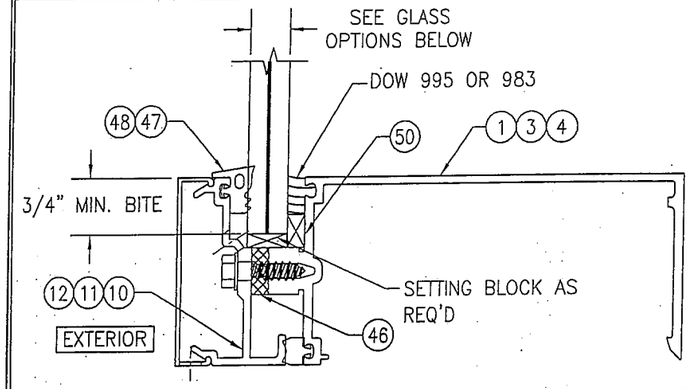

TYPICAL GLAZING DETAIL; MONOLITHIC LAMINATED GLASS TO STANDARD FRAMING

GLASS OPTIONS:
OPTION 1: 5/8" THICK LAMINATED VIRACON HRG-2 GLASS (1/4" HT. ST./0.050" URETHANE/0.080" POLYCARBONATE/0.050" URETHANE/1/4" HT. ST.)
OPTION 2 9/16" THICK LAMINATED GLASS (1/4" HT. ST./0.100" SOLUTIA SAFLEX HP/1/4" HT. ST.)
OPTION 3: 9/16" THICK LAMINATED GLASS (1/4" HT. ST./0.090" DUPONT SG/1/4" HT. ST.)
OPTION 4: 9/16" THICK LAMINATED GLASS (1/4" HT. ST./0.090" SOLUTIA SAFLEX/1/4" HT. ST.)
OPTION 5: 9/16" THICK LAMINATED GLASS (1/4" HT. ST./0.090" DUPONT BUTACITE PVB/1/4" HT. ST.)

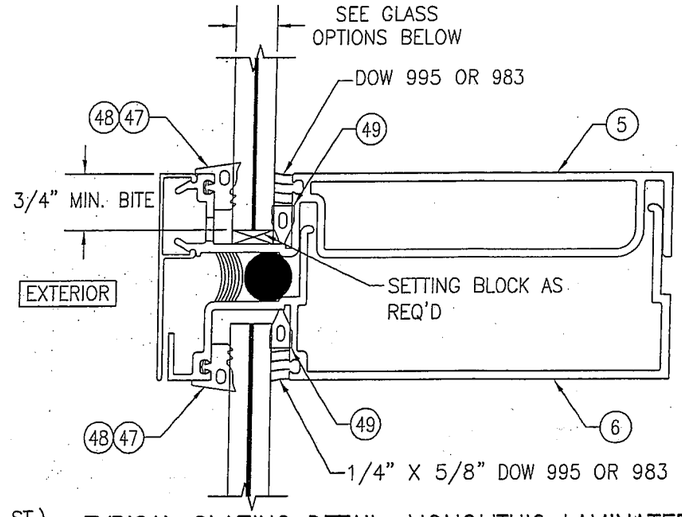

TYPICAL GLAZING DETAIL; MONOLITHIC LAMINATED GLASS TO SPLICE JOINT FRAMING

GLASS OPTIONS:
OPTION 1: 5/8" THICK LAMINATED VIRACON HRG-2 GLASS (1/4" HT. ST./0.050" URETHANE/0.080" POLYCARBONATE/0.050" URETHANE/1/4" HT. ST.)
OPTION 2 9/16" THICK LAMINATED GLASS (1/4" HT. ST./0.100" SOLUTIA SAFLEX HP/1/4" HT. ST.)
OPTION 3: 9/16" THICK LAMINATED GLASS (1/4" HT. ST./0.090" DUPONT SG/1/4" HT. ST.)
OPTION 4: 9/16" THICK LAMINATED GLASS (1/4" HT. ST./0.090" SOLUTIA SAFLEX/1/4" HT. ST.)
OPTION 5: 9/16" THICK LAMINATED GLASS (1/4" HT. ST./0.090" DUPONT BUTACITE PVB/1/4" HT. ST.)

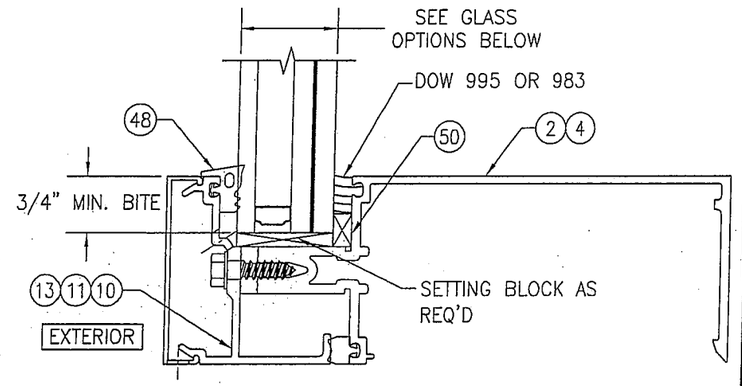

TYPICAL GLAZING DETAIL; I.G. GLASS TO STANDARD FRAMING

(NOT APPLICABLE TO CORNER FRAME MEMBER)

GLASS OPTIONS:
OPTION 6: 1 5/16" THICK I.G LAMINATED GLASS (1/4" HT. ST. OR TEMPERED EXTERIOR; 1/2" AIR SPACE; 1/4" HT. ST./0.090" SOLUTIA SAFLEX/1/4" HT. ST. INTERIOR)
OPTION 7: 1 5/16" THICK I.G LAMINATED GLASS (1/4" HT. ST. OR TEMPERED EXTERIOR; 1/2" AIR SPACE; 1/4" HT. ST./0.090" DUPONT BUTACITE PVB/1/4" HT. ST. INTERIOR)

NOTE: EXTERIOR GLASS PANE OF I.G. GLAZING SHALL BE TEMPERED WHEN CURTAIN WALL GLASS IS INSTALLED IN A SMALL MISSILE IMPACT LOCATION OF A BUILDING OR WHEN GLASS IS REQUIRED TO BE SAFETY GLAZED.

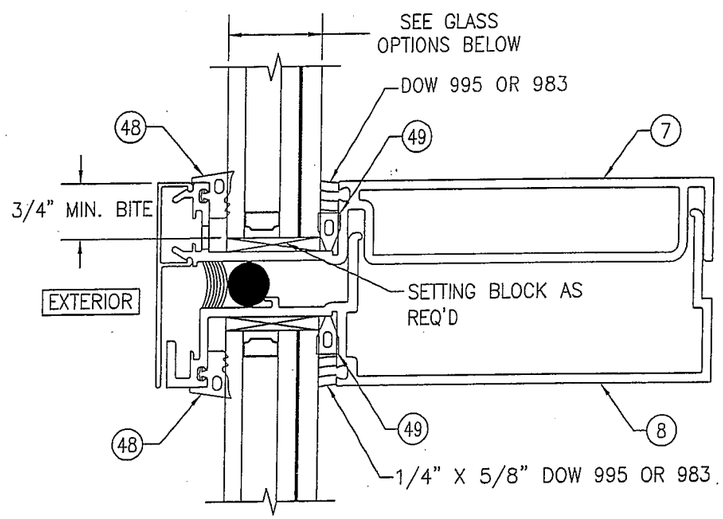

TYPICAL GLAZING DETAIL; I.G. GLASS TO SPLICE JOINT FRAMING

NOTE: EXTERIOR GLASS PANE OF I.G. GLAZING SHALL BE TEMPERED WHEN CURTAIN WALL GLASS IS INSTALLED IN A SMALL MISSILE IMPACT LOCATION OF A BUILDING OR WHEN GLASS IS REQUIRED TO BE SAFETY GLAZED.

GLASS OPTIONS:
OPTION 6: 1 5/16" THICK I.G LAMINATED GLASS (1/4" HT. ST. OR TEMPERED EXTERIOR; 1/2" AIR SPACE; 1/4" HT. ST./0.090" SOLUTIA SAFLEX/1/4" HT. ST. INTERIOR)
OPTION 7: 1 5/16" THICK I.G LAMINATED GLASS (1/4" HT. ST. OR TEMPERED EXTERIOR; 1/2" AIR SPACE; 1/4" HT. ST./0.090" DUPONT BUTACITE PVB/1/4" HT. ST. INTERIOR)

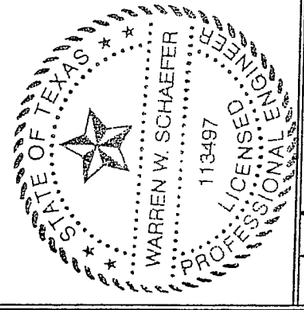

DRAWN BY: W.W.S.	CHECKED BY: W.W.S.
PLOT: 1=2	DATE: 03/19/13

NO.	REVISION DESCRIPTION	BY	DATE

DRAWING TITLE
7 13/16" DEEP 1600 SYSTEM 1 CURTAIN WALL (L.M.I.)

JOB INFORMATION:
KAWNEER COMPANY, INC.
555 GUTHRIDGE COURT
NORCROSS, GA 30092
770-449-5555

CONSULTANTS
W. W. SCHAEFER ENGINEERING & CONSULTING, P.A. (REG. NO. F-14980)
7480 150TH COURT NORTH
PALM BEACH GARDENS, FL 33418
PHONE: 561-744-3424

CERTIFICATION
MAR 20 2013
WARREN W. SCHAEFER P.E.
P.E. NO. 113497

DRAWING NO. 1789T
REV.
SHEET NO. 15 OF 18

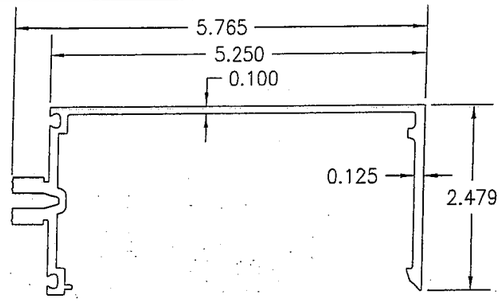

1 HEAD & SILL HORIZONTAL FRAMING USED WITH MONOLITHIC GLASS

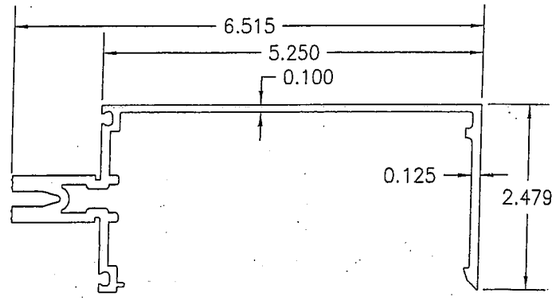

2 HEAD & SILL HORIZONTAL FRAMING USED WITH I.G. GLASS

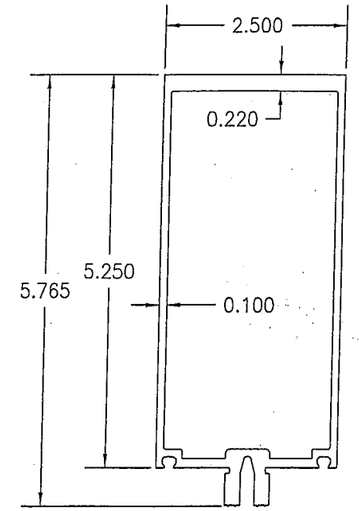

3 STANDARD VERTICAL MULLION OR HORIZONTAL INTERMEDIATE MEMBER USED WITH MONOLITHIC GLASS

I = 9.607^4

S = 3.169^3

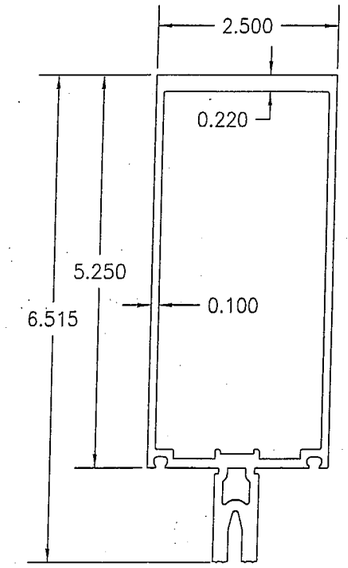

4 CORNER MULLION USED WITH MONOLITHIC GLASS AND STANDARD VERTICAL MULLION OR HORIZONTAL INTERMEDIATE MEMBER USED WITH I.G. GLASS

I = 12.767^4

S = 3.805^3

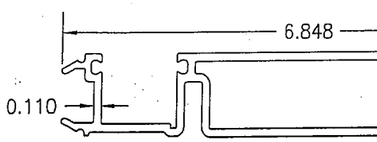

5 FEMALE HALF EXPANSION HORIZONTAL USED WITH MONOLITHIC GLASS

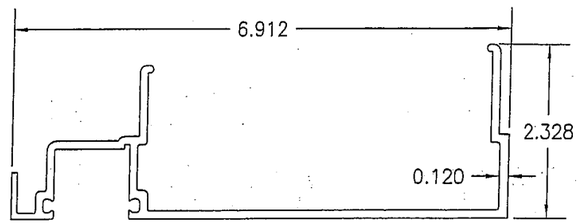

6 MALE HALF EXPANSION HORIZONTAL USED WITH MONOLITHIC GLASS

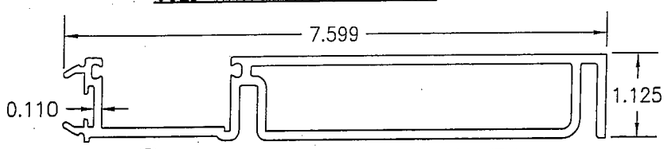

7 FEMALE HALF EXPANSION HORIZONTAL USED WITH I.G. GLASS

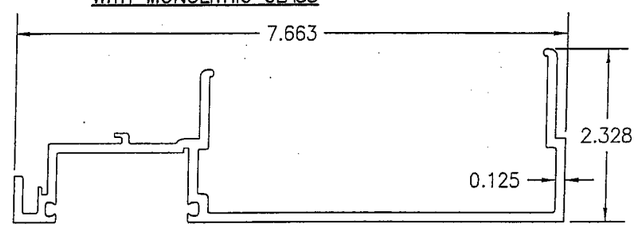

8 MALE HALF EXPANSION HORIZONTAL USED WITH I.G. GLASS

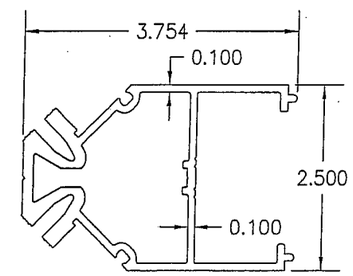

9 CORNER MULLION ADAPTOR

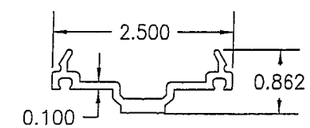

10 PRESSURE PLATE

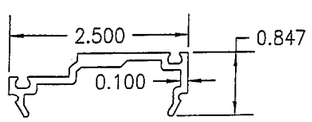

11 PRESSURE PLATE

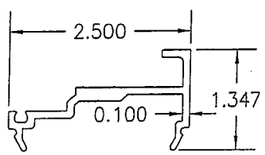

12 PRESSURE PLATE

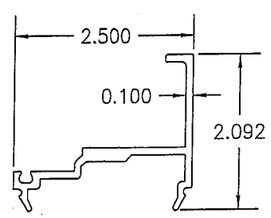

13 PRESSURE PLATE

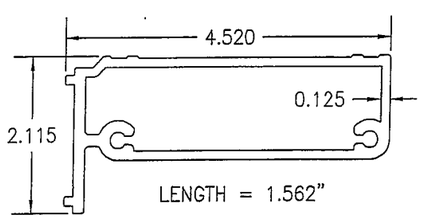

14 SHEAR BLOCK (HORIZONTAL FRAMING TO STANDARD VERTICAL MULLION)

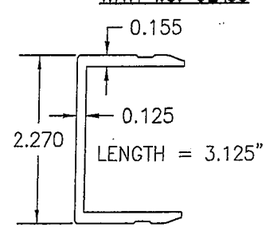

15 SHEAR BLOCK (HORIZONTAL FRAMING TO CORNER MULLION)

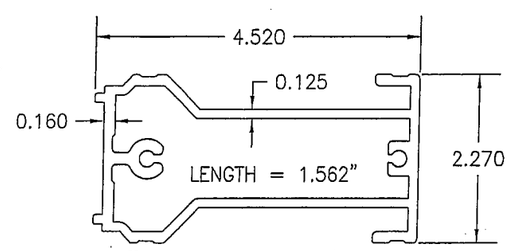

16 SHEAR BLOCK (TRANSOM MULLION TO STANDARD VERTICAL MULLION)

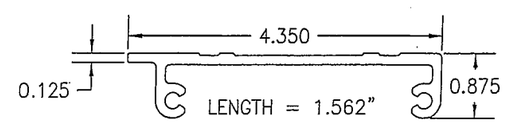

17 SHEAR BLOCK (HORIZONTAL EXPANSION MULLION TO STANDARD VERTICAL MULLION)

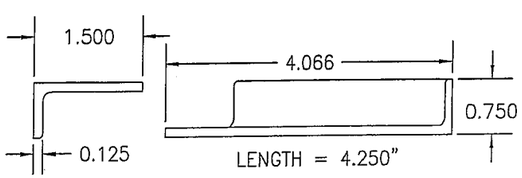

18 SHEAR BLOCK (HORIZONTAL EXPANSION MULLION TO CORNER MULLION)

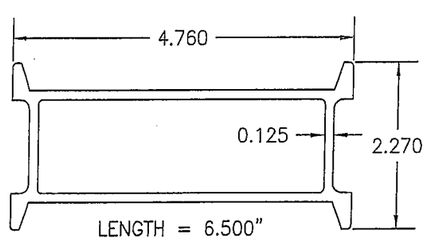

19 VERTICAL MULLION SPLICE SLEEVE

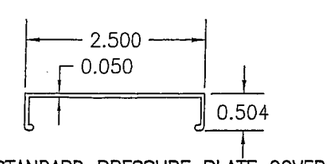

20 STANDARD PRESSURE PLATE COVER

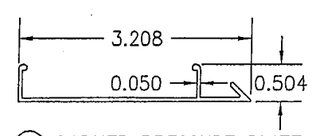

21 CORNER PRESSURE PLATE COVER

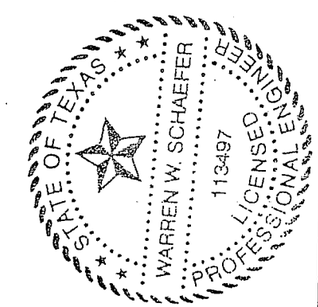

DRAWN BY: W.W.S.	CHECKED BY: W.W.S.
PLOT: 1=2	DATE: 03/19/13

NO.	REVISION DESCRIPTION	BY	DATE

DRAWING TITLE: 7 13/16" DEEP 1600 SYSTEM 1 CURTAIN WALL (L.M.I.)

JOB INFORMATION:

KAWNEER COMPANY, INC.
555 GUTHRIDGE COURT
NORCROSS, GA 30092
770-449-5555

CONSULTANTS:
W. W. SCHAEFER ENGINEERING & CONSULTING, P.A. (REG. NO. F-14980)
7480 150TH COURT NORTH
PALM BEACH GARDENS, FL 33418
PHONE: 561-744-3424

CERTIFICATION

MAR 20 2013

WARREN W. SCHAEFER, P.E.
P.E. NO. 113497

DRAWING NO. 1789T | REV.

SHEET NO. 16 OF 18

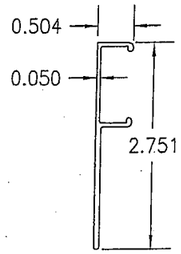

(23) EXPANSION HORIZONTAL MULLION COVER

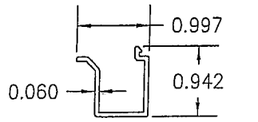

(24) DOOR POCKET FILLER

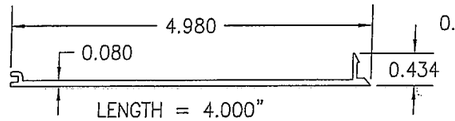

(25) SILL FRAMING FILLER

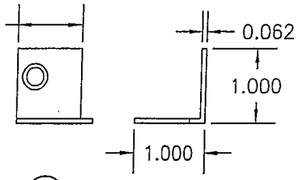

(26A) JOINT PLUG USED WITH MONOLITHIC GLASS SYSTEMS

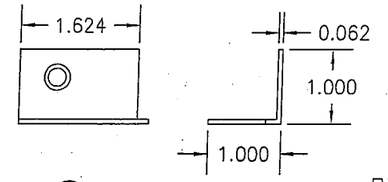

(26B) JOINT PLUG USED WITH I.G. GLASS SYSTEMS

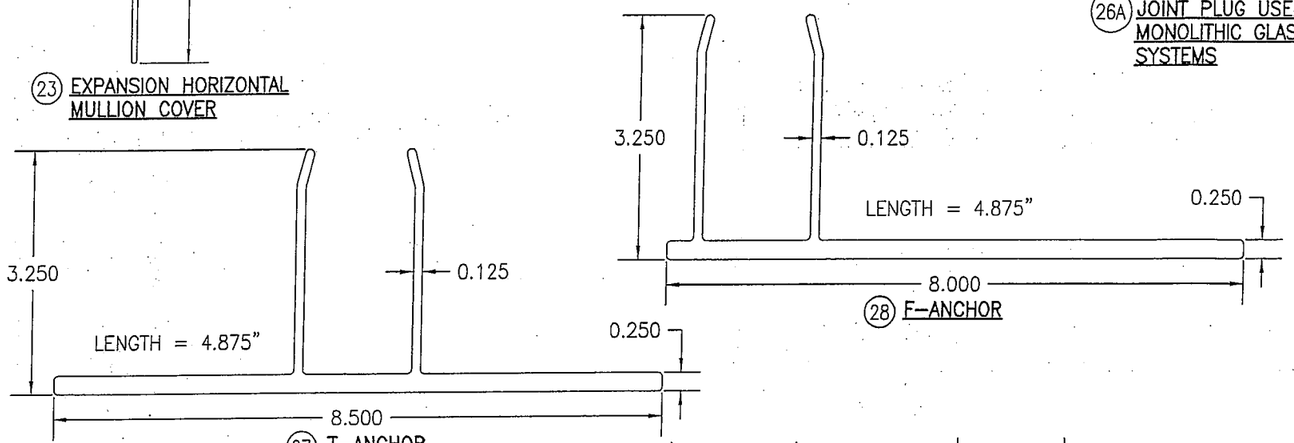

(28) F-ANCHOR

(27) T-ANCHOR

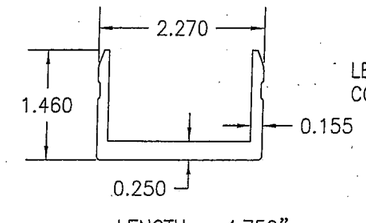

(29) U-ANCHOR

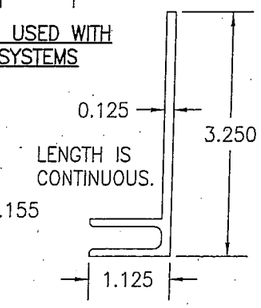

(30) F-PERIMITER ANCHOR USED WITH MONOLITHIC GLASS SYSTEMS

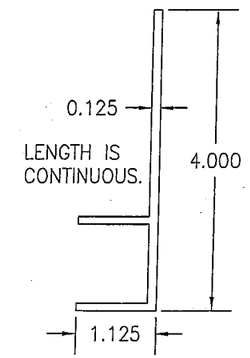

(31) F-PERIMITER ANCHOR USED WITH WITH I.G. GLASS SYSTEMS

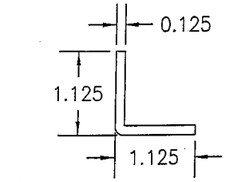

(32) CORNER MULLION JOINER

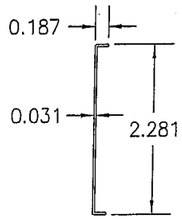

LENGTH = 2.500"

(33) COVER SPLICE

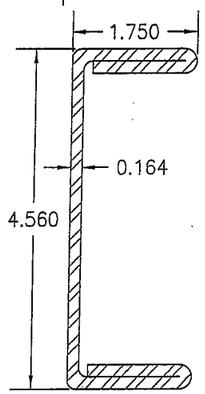

(36) MULLION REINFORCEMENT
I = 5.667 IN^4
S = 2.485 IN^3

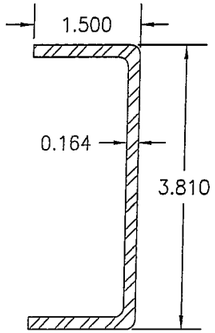

(37) MULLION REINFORCEMENT
I = 2.208 IN^4
S = 1.159 IN^3

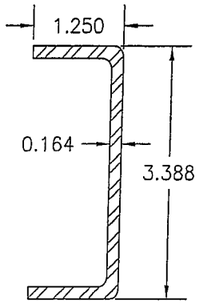

(38) MULLION REINFORCEMENT
I = 1.453 IN^4
S = 0.858 IN^3

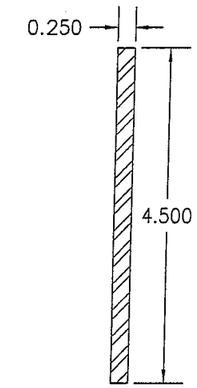

(39) MULLION REINFORCEMENT
I = 1.898 IN^4
S = 0.844 IN^3

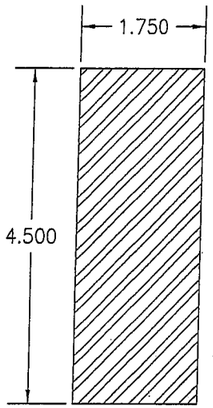

(40) CORNER MULLION REINFORCEMENT
I = 13.289 IN^4
S = 5.906 IN^3

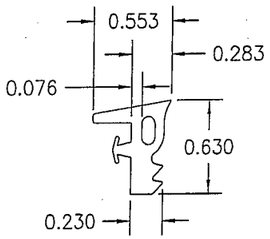

(47) EXTERIOR GLAZING FIXED GASKET USED WITH 5/8" MONOLITHIC GLASS

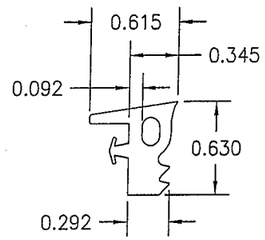

(48) EXTERIOR GLAZING FIXED GASKET

STATE OF TEXAS
WARREN W. SCHAEFER
113497
LICENSED PROFESSIONAL ENGINEER

DRAWN BY: W.W.S.	CHECKED BY: W.W.S.
PLOT: 1=2	DATE: 03/19/13

NO.	REVISION DESCRIPTION	BY	DATE

DRAWING TITLE
7 13/16" DEEP 1600 SYSTEM 1 CURTAIN WALL (L.M.I.)

JOB INFORMATION:
KAWNEER COMPANY, INC.
555 GUTHRIDGE COURT
NORCROSS, GA 30092
770-449-5555

CONSULTANTS
W. W. SCHAEFER ENGINEERING & CONSULTING, P.A. (REG. NO. F-14980)
7480 150TH COURT NORTH
PALM BEACH GARDENS, FL 33418
PHONE: 561-744-3424

CERTIFICATION
MAR 20 2013
WARREN W. SCHAEFER, P.E.
P.E. NO. 113497

DRAWING NO. 1789T
REV.

SHEET NO. 17 OF 18

ITEM #	ITEM DESCRIPTION	MANUFACTURER/NOTES
	PARTS	
1	HEAD & SILL HORIZONTAL FRAMING USED WITH MONOLITHIC GLASS	6063–T6 ALUMINUM
2	HEAD & SILL HORIZONTAL FRAMING USED WITH I.G. GLASS	6063–T6 ALUMINUM
3	STANDARD VERTICAL MULLION OR HORIZONTAL INTERMEDIATE MEMBER USED WITH MONOLITHIC GLASS	6063–T6 ALUMINUM
4	CORNER MULLION USED WITH MONOLITHIC GLASS AND STANDARD VERTICAL MULLION OR HORIZONTAL INTERMEDIATE MEMBER USED WITH I.G. GLASS	6063–T6 ALUMINUM
5	FEMALE HALF EXPANSION HORIZONTAL USED WITH MONOLITHIC GLASS	6063–T6 ALUMINUM
6	MALE HALF EXPANSION HORIZONTAL USED WITH MONOLITHIC GLASS	6063–T6 ALUMINUM
7	FEMALE HALF EXPANSION HORIZONTAL USED WITH I.G. GLASS	6063–T6 ALUMINUM
8	MALE HALF EXPANSION HORIZONTAL USED WITH I.G. GLASS	6063–T6 ALUMINUM
9	CORNER MULLION ADAPTOR	6063–T6 ALUMINUM
10	PRESSURE PLATE	6063–T6 ALUMINUM
11	PRESSURE PLATE	6063–T6 ALUMINUM
12	PRESSURE PLATE	6063–T6 ALUMINUM
13	PRESSURE PLATE	6063–T6 ALUMINUM
14	SHEAR BLOCK (HORIZONTAL FRAMING TO STANDARD VERTICAL MULLION)	6063–T6 ALUMINUM
15	SHEAR BLOCK (HORIZONTAL FRAMING TO CORNER MULLION)	6063–T6 ALUMINUM
16	SHEAR BLOCK (TRANSOM MULLION TO STANDARD VERTICAL MULLION)	6063–T6 ALUMINUM
17	SHEAR BLOCK (HORIZONTAL EXPANSION MULLION TO STANDARD VERTICAL MULLION)	6063–T6 ALUMINUM
18	SHEAR BLOCK (HORIZONTAL EXPANSION MULLION TO CORNER MULLION)	6063–T6 ALUMINUM
19	VERTICAL MULLION SPLICE SLEEVE	6063–T6 ALUMINUM
20	STANDARD PRESSURE PLATE COVER	6063–T6 ALUMINUM
21	CORNER PRESSURE PLATE COVER	6063–T6 ALUMINUM
23	EXPANSION HORIZONTAL MULLION COVER	6063–T6 ALUMINUM
24	DOOR POCKET FILLER	6063–T6 ALUMINUM
25	SILL FRAMING FILLER	6063–T6 ALUMINUM (AT 1/4 POINTS OF FRAMING SPAN)
26A	JOINT PLUG USED WITH MONOLITHIC GLASS SYSTEMS	6063–T6 ALUMINUM
26B	JOINT PLUG USED WITH I.G. GLASS SYSTEMS	6063–T6 ALUMINUM
27	T–ANCHOR	6063–T6 ALUMINUM
28	F–ANCHOR	6063–T6 ALUMINUM
29	U–ANCHOR	6063–T6 ALUMINUM
30	F–PERIMITER ANCHOR USED WITH WITH MONOLITHIC GLASS SYSTEMS	6063–T6 ALUMINUM
31	F–PERIMITER ANCHOR USED WITH WITH I.G. GLASS SYSTEMS	6063–T6 ALUMINUM
32	CORNER MULLION JOINER	5005 H32 ALUMINUM
33	COVER SPLICE	5005 H32 ALUMINUM

ITEM #	ITEM DESCRIPTION	MANUFACTURER/NOTES
	PARTS	
36	MULLION REINFORCEMENT	ASTM A1011 GRADE 50 STEEL
37	MULLION REINFORCEMENT	ASTM A1011 GRADE 50 STEEL
38	MULLION REINFORCEMENT	ASTM A1011 GRADE 50 STEEL
39	MULLION REINFORCEMENT	ASTM A36 STEEL
40	CORNER MULLION REINFORCEMENT	ASTM A36 STEEL
41	5" X 3" X 3/8" X 6" LONG ANGLE	50 KSI STEEL
42	8" X 3" X 3/8" X 6" LONG BENT PLATE	50 KSI STEEL
	SEALS & SEALANTS	
45	FIXED GASKET	TREMCO TR4726P EPDM DUROMETER 70 +/–5
46	THERMAL SEPERATOR	TREMCO TR–4015P EPDM DUROMETER 60 +/–5
47	EXTERIOR GLAZING FIXED GASKET USED WITH 5/8" MONOLITHIC GLASS	TREMCO TR–4860W EPDM DUROMETER 60 +/–5
48	EXTERIOR GLAZING FIXED GASKET USED WITH I.G. & 9/16" MONOLITHIC GLASS	TREMCO TR–4014P EPDM DUROMETER 60 +/–5
49	WEDGE GLAZING GASKET	TREMCO TR–4873S SILICONE DUROMETER 70 +/–5
50	5/16" X 7/16" GLAZING TAPE	NORTON V2100 FOAM OR TREMCO 920
51	STEEL TO ALUMINUM SEPERATOR	THERMO–TOK TN–9004
	FASTENERS	
54	1/4" X 1" HWHTFS 300 SERIES S.S.	WITHIN 3" FROM ENDS & 9" MAX. O.C.
55	1/4–20 X 2" FNTCS 300 SERIES S.S.	WITHIN 9" FROM ENDS & 9" MAX. O.C.
56	NO. 10 X 3/8" FHTFS 300 SERIES S.S.	1 PER JOINT PLUG
57	10–16 X 1 1/4" FHSDS 300 SERIES S.S.	1 PER VERTICAL MULLION SPLICE SLEEVE
58	NO. 12 X 1" PHTFS 300 SERIES S.S.	1 PER VERTICAL MULLION SPLICE SLEEVE
59	NO. 12 X 1" PHTFS 300 SERIES S.S.	2 ABOVE SPLICE; WITHIN 3" OF END 3" O.C.
60	1/4" X 3" S.S. HWHTFS FNTCS 300 SERIES S.S.	WITHIN 9" FROM ENDS & 9" MAX. O.C.
61	1/4–20 X 2" FNTCS 300 SERIES S.S.	WITHIN 9" FROM ENDS & 24" MAX. O.C.
62	NO. 10 X 1/2" PHTFS 300 SERIES S.S.	WITHIN 6" FROM ENDS & 18" MAX. O.C.
63	NO. 8 X 1/2" FHTFS 300 SERIES S.S.	2 PER U–ANCHOR
64	NO. 12 X 1 7/8" PHTFS 300 SERIES S.S.	2 PER SHEAR BLOCK
65	NO. 12 X 7/8" FHTFS 300 SERIES S.S.	2 PER SHEAR BLOCK
66	NO. 12 X 7/16" PHTFS 300 SERIES S.S.	3 PER SHEAR BLOCK
67	NO. 12 X 1/2" FHTFS 300 SERIES S.S.	2 PER SHEAR BLOCK
68	NO. 12 X 1/2" FHTFS 300 SERIES S.S.	4 PER SHEAR BLOCK

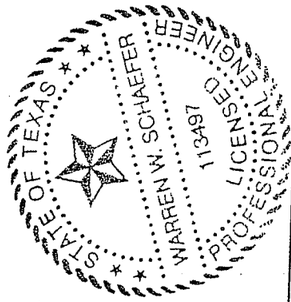

DRAWN BY: W.W.S. | CHECKED BY: W.W.S.
PLOT: 1=2 | DATE: 03/19/13

NO.	REVISION DESCRIPTION	BY	DATE

DRAWING TITLE
7 13/16" DEEP 1600 SYSTEM 1 CURTAIN WALL (L.M.I.)

JOB INFORMATION:
KAWNEER COMPANY, INC.
555 GUTHRIDGE COURT
NORCROSS, GA 30092
770–449–5555

CONSULTANTS
W. W. SCHAEFER ENGINEERING & CONSULTING, P.A. (REG. NO. F–14980)
7480 150TH COURT NORTH
PALM BEACH GARDENS, FL 33418
PHONE: 561–744–3424

CERTIFICATION
MAR 20 2013
WARREN W. SCHAEFER P.E.
P.E. NO. 113497

DRAWING NO. 1789T | REV.
SHEET NO. 18 OF 18