GENERAL NOTES:

1. THESE STORE FRONT SYSTEMS HAVE BEEN TESTED, ANALYZED & APPROVED FOR DESIGN PRESSURES NOT TO EXCEED THOSE SHOWN IN THE "ALLOWABLE DESIGN PRESSURE TABLE(S).
2. OPENINGS, BUCKING & BUCKING FASTENERS MUST BE PROPERLY DESIGNED & INSTALLED TO TRANSFER WIND LOADS TO THE STRUCTURE.
3. ALL HARDWARE & FASTENERS SHALL BE IN ACCORDANCE WITH THESE DRAWINGS & SHALL NOT VARY UNLESS SPECIFICALLY MENTIONED ON THE DRAWINGS. SPECIFIED ANCHOR EMBED TO BASE MATERIAL SHALL BE BEYOND WALL FINISH OR STUCCO.
4. THE DETAILS & SPECIFICATIONS SHOWN HEREIN REPRESENT THE PRODUCTS TESTED & PROPOSED FOR WATER, AIR, IMPACT, CYCLIC & UNIFORM STATIC AIR PRESSURE TESTING IN CONFORMANCE WITH ASTM E330, E283, E331, E1886 & E1996 FOR LARGE MISSILE IMPACT STORE FRONT SYSTEMS.
5. THESE STORE FRONT SYSTEMS HAVE BEEN DESIGNED IN ACCORDANCE WITH AND MEET THE REQUIREMENTS OF THE INTERNATIONAL BUILDING CODE (IBC).
6. IMPACT SHUTTERS ARE NOT REQUIRED WITH THIS STORE FRONT SYSTEM.
7. ALL ANCHORS SECURING STORE FRONT FRAME TO PRESSURE TREATED BUCKS OR WOOD FRAMING SHALL BE CAPABLE OF RESISTING CORROSION CAUSED BY THE PRESSURE TREATING CHEMICALS IN THE WOOD.
8. DETERMINE THE POSITIVE & NEGATIVE DESIGN LOADS TO USE WHEN REFERENCING THESE DOCUMENTS IN ACCORDANCE WITH THE GOVERNING CODE AND GOVERNING WIND VELOCITY. FOR WIND LOAD CALCULATIONS IN ACCORDANCE WITH THE INTERNATIONAL BUILDING CODE, A DIRECTIONALITY FACTOR OF KD = 0.85 MAY BE APPLIED PER THE ASCE-7 STANDARD.
9. NO INCREASE IN ALLOWABLE STRESS HAS BEEN USED IN THE CERTIFICATION OF THIS PRODUCT. WIND LOAD DURATION FACTOR CD = 1.6 WAS USED FOR WOOD SCREW ANALYSIS ONLY.
10. MATERIALS, INCLUDING BUT NOT LIMITED TO STEEL SCREWS, THAT COME INTO CONTACT WITH OTHER DISSIMILAR MATERIALS SHALL BE SEPARATED OR COATED AS REQUIRED TO AVOID CORROSION OF EITHER MATERIAL.
11. TO THE BEST OF OUR KNOWLEDGE, THE STORE FRONT SYSTEMS SHOWN HEREIN ARE QUALITY ASSURED BY AN APPROVED CERTIFICATION/QA ENTITY & SHALL BE LABELED IN ACCORDANCE WITH APPLICABLE STANDARDS. THESE DRAWINGS SHOW ALL APPLICABLE ELEVATION, COMBINATION, INSTALLATION & COMPARATIVE ANALYSIS CONDITIONS AS DETERMINED THROUGH TESTING & ENGINEERING RATIONAL ANALYSIS. STORE FRONT ASSEMBLY SHALL BE IN ACCORDANCE WITH THESE DRAWINGS, THE MANUFACTURER'S QUALITY ASSURANCE SPECIFICATIONS & TESTING REPORTS.
12. CERTIFICATION OF THESE STORE FRONT SYSTEMS SHALL BE CONSIDERED VOID IF THEY ARE INSTALLED WITHOUT A BUILDING PERMIT FROM THE APPLICABLE LOCAL BUILDING DEPARTMENT OR IF THEY ARE INSTALLED BY ANYONE OTHER THAN A LICENSED CONTRACTOR EXPERIENCED WITH STORE FRONT INSTALLATIONS.

ALLOWABLE D.L.O. SIZE TABLE

MAXIMUM D.L.O. HEIGHT (IN.)	MAXIMUM D.L.O. WIDTH (IN.)
115 1/4	43 3/4
108	46 1/2
102	49 1/4
96	52 1/2
92 3/4	54 1/4
90	56
84	60

CORNER CONSTRUCTION:

FRAME CORNERS & VERTICAL INTERMEDIATE CORNERS: HORIZONTAL MEMBERS ARE SQUARE CUT, BUTTED TO THE VERTICAL MEMBER, FASTENED WITH 3 TO 4 S.S. NO. 12 X 1" PHTFS FASTENERS THROUGH THE VERTICAL MEMBERS INTO THE HORIZONTAL MEMBER SCREW SPLINES & SEALED WITH SILICONE.
PROJECT-OUT FRAME CORNERS: MITERED, JOINED TOGETHER VIA A CORNER KEY (ITEM #24) & SEALED WITH SILICONE SEALANT.
PROJECT-OUT SASH CORNERS: MITERED, JOINED TOGETHER VIA A CORNER KEY (ITEM #25) & SEALED WITH SILICONE SEALANT.

FRAME ANCHOR REQUIREMENTS TABLE

OPENING TYPE (SUBSTRATE)	FRAME/FIN TO OPENING FASTENER TYPE	MINIMUM EMBED	MINIMUM EDGE DIST.
FRAME & STRAP ANCHOR SCREWS			
(1) MIN. 2X_ WOOD FRAME OR BUCK (MIN. GR. 3 & G=0.55)	NO. 14 SMS OR WOOD SCREW	1 3/8"	1"
MIN. 16 GA. 33 KSI METAL STUD	1/4" SELF TAP/DRILL SCREW	FULL	1/2"
MIN. 1/8" THK A36 STEEL	1/4" SELF TAP/DRILL SCREW	FULL	1/2"
MIN. 0.100" THK 6063-T6 ALUM.	1/4" SELF TAP/DRILL SCREW	FULL	1/2"
(2) CONCRETE FILLED CMU	(3) 1/4" CONCRETE SCREW	1 3/4"	2 1/2"
3000 PSI CONCRETE	(3) 1/4" CONCRETE SCREW	1 3/4"	2 1/2"

(1) FRAME SCREW MOUNT REQUIRES MIN. 2X4; STRAP ANCHOR MOUNT REQUIRES MIN. 2X6.
(2) WHEN SUBSTRATE IS WOOD & FRAME SCREWS ARE REQUIRED AT SIDES OF OPENING, THE SHIM SPACE AT THE SIDES SHALL NOT BE GREATER THAN 1/4" UNLESS THE SCREWS ARE GRADE 5 (MAY BE UP TO 3/8" WITH GR. 5 SCREWS)
(3) CMU IS APPLICABLE AT SIDES ONLY & MUST BE CONCRETE FILLED WHEN SIDE JAMB ANCHORS ARE REQUIRED.
(4) CONCRETE SCREWS SHALL BE ELCO ULTRACONS (C.S.), ELCO CRETE-FLEX (S.S.), ITW RAMSET/RED HEAD TAPCONS (C.S. OR S.S.) OR HILTI KWIK-CON II (C.S OR S.S.).

MULLION PRESSURE TABLE (VERTICAL INTERMEDIATE MULLION)

MAXIMUM FRAME HEIGHT DIMENSION (IN.)	MAXIMUM LOAD WIDTH DIMENSION (IN.)	ALLOWABLE PRESSURE (PSF) 6 ANCHORS	4 ANCHORS
121 1/4	62 3/4	56.6	36.5
	56 3/4	62.6	40.4
	50 3/4	70.0	45.2
	44 3/4	70.0	51.2
	38 3/4	70.0	59.2
	32 3/4	70.0	70.0
109 1/4	62 3/4	62.8	40.6
	56 3/4	69.5	44.8
	50 3/4	70.0	50.1
	44 3/4	70.0	56.9
	38 3/4	70.0	65.7
	35 3/4	70.0	70.0
97 1/4	62 3/4	70.0	45.6
	56 3/4	70.0	50.4
	50 3/4	70.0	56.3
	44 3/4	70.0	63.9
	40 3/4	70.0	70.0
90	62 3/4	70.0	49.2
	56 3/4	70.0	54.4
	50 3/4	70.0	60.9
	44 3/4	70.0	69.0
84	62 3/4	70.0	52.7
	56 3/4	70.0	58.3
	50 3/4	70.0	65.2
	46 3/4	70.0	70.0
78	62 3/4	70.0	56.8
	56 3/4	70.0	62.8
	50 3/4	70.0	70.0
72	62 3/4	70.0	61.5
	56 3/4	70.0	68.0
	54 3/4	70.0	70.0
66	62 3/4	70.0	67.1
	59 3/4	70.0	70.0
65	62 3/4	70.0	70.0

1. DIMENSIONS SHOWN ARE +/-1/4".

MULLION PRESSURE TABLE (5" SIDE JAMB)

MAXIMUM FRAME HEIGHT DIMENSION (IN.)	MAXIMUM LOAD WIDTH DIMENSION (IN.)	ALLOWABLE PRESSURE (PSF) 3 ANCHORS PER END	2 ANCHORS PER END
121 1/4	35	58.0	38.5
	32	63.4	42.1
	29	70.0	46.5
	26	70.0	51.8
	23	70.0	58.6
	20	70.0	67.4
	17	70.0	70.0
109 1/4	35	64.4	42.7
	32	70.0	46.7
	29	70.0	51.6
	26	70.0	57.5
	23	70.0	65.0
	20	70.0	70.0
97 1/4	35	70.0	48.0
	32	70.0	52.5
	29	70.0	57.9
	26	70.0	64.6
	23	70.0	70.0
90	35	70.0	51.9
	32	70.0	56.7
	29	70.0	62.6
	26	70.0	69.8
	25	70.0	70.0
84	35	70.0	55.6
	32	70.0	60.8
	29	70.0	67.1
	27	70.0	70.0
78	35	70.0	59.8
	32	70.0	65.4
	29	70.0	70.0
72	35	70.0	64.8
	32	70.0	70.0
66	35	70.0	70.0

1. DIMENSIONS SHOWN ARE +/-1/4".

MULLION PRESSURE TABLE (2 3/4" SIDE JAMB)

MAXIMUM FRAME HEIGHT DIMENSION (IN.)	MAXIMUM LOAD WIDTH DIMENSION (IN.)	ALLOWABLE PRESSURE (PSF) 3 ANCHORS PER END	2 ANCHORS PER END
90	32 3/4	70.0	46.5
	29 3/4	70.0	51.1
	26 3/4	70.0	56.9
	23 3/4	70.0	64.1
	20 3/4	70.0	70.0
84	32 3/4	70.0	49.8
	29 3/4	70.0	54.8
	26 3/4	70.0	60.9
	23 3/4	70.0	68.6
	22 3/4	70.0	70.0
78	32 3/4	70.0	53.6
	29 3/4	70.0	59.0
	26 3/4	70.0	65.6
	23 3/4	70.0	70.0
72	32 3/4	70.0	58.1
	29 3/4	70.0	63.9
	26 3/4	70.0	70.0
66	32 3/4	70.0	63.4
	29 3/4	70.0	69.7
	28 3/4	70.0	70.0
60	32 3/4	70.0	69.7
	31 3/4	70.0	70.0

1. DIMENSIONS SHOWN ARE +/-1/4".
2. FRAME HEIGHTS CONSIDERED ARE FOR SINGLE SPAN JAMBS ONLY. WHEN JAMB HAS MID-SPAN ANCHORS & IS SPLIT INTO 2 SPANS, THIS TABLE DOES NOT APPLY, ALLOWABLE PRESSURE ON THE 2-SPAN JAMB IS +/-70 PSF FOR ALL UNIT SIZE CONDITIONS & ONLY 2 ANCHORS ARE REQUIRED AT JAMB ENDS.

EVALUATION OF THIS PRODUCT IS BASED ON APPLICABLE STANDARDS AND/OR INFORMATION & RESULTS FROM APPLICABLE TEST REPORTS. THE BUILDING CODE VERSION CONSIDERED WITH THIS EVALUATION WAS THAT IN FORCE AT THE TIME OF THE EVALUATION. IN THE EVENT OF CODE VERSION CHANGES/UPDATES OR IN THE EVENT THAT NEW OR ADDITIONAL TESTING IS COMPLETED ON THIS PRODUCT, PRIOR TO STATING CODE COMPLIANCE, THE MANUFACTURER SHALL CONFIRM WITH THE EVALUATION ENGINEER OF RECORD THAT EVERYTHING SPECIFIED HERE-IN IS CURRENT WITH ALL CURRENT TESTING, CODES AND APPLICABLE STANDARDS.

THESE DRAWINGS ARE APPLICABLE ONLY TO THE PRODUCT SPECIFIED. THEY MAY NOT BE USED FOR THE ASSEMBLY AND/OR INSTALLATION OF ANY OTHER PRODUCT NOR MAY THEY BE USED FOR RATIONAL AND/OR LOCAL APPROVAL OF ANY PRODUCT NOT PRODUCED BY THE MANUFACTURER STATED ON THESE DRAWINGS.

STATE OF TEXAS · WARREN W. SCHAEFER · 113497 · LICENSED PROFESSIONAL ENGINEER

DRAWN BY: W.R.M. | CHECKED BY: W.W.S.
PLOT: 1=24 | DATE: 03/19/13

NO.	REVISION DESCRIPTION	BY	DATE

DRAWING TITLE: IR501UT ALUMINUM LARGE MISSILE IMPACT (WET GLAZED) STORE FRONT SYSTEM

JOB INFORMATION: KAWNEER COMPANY, INC. 555 GUTHRIDGE COURT NORCROSS, GA 30092 770-449-5555

CONSULTANTS: W. W. SCHAEFER ENGINEERING & CONSULTING, P.A. (REG. NO. F-14980) 7480 150TH COURT NORTH PALM BEACH GARDENS, FL 33418 PHONE: 561-744-3424

CERTIFICATION: MAR 20 2013
WARREN W. SCHAEFER, P.E. P.E. NO. 113497

DRAWING NO. 1758T | REV.
SHEET NO. 1 OF 10

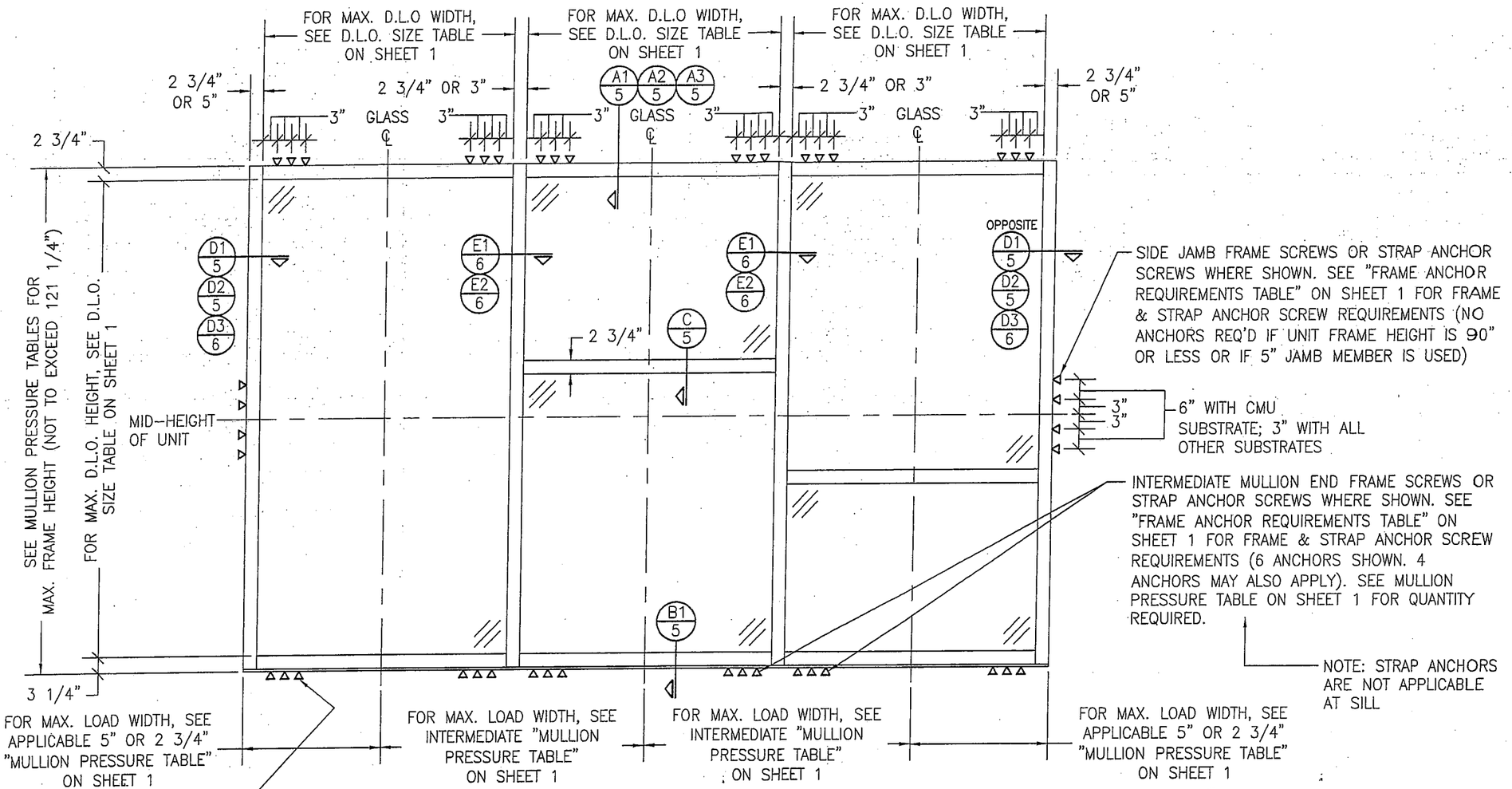

EXTERIOR ELEVATION:
MULTIPLE FIXED PANEL STORE FRONT ASSEMBLY

SCALE: 1/2" = 1'-0"

(HORIZONTAL STACKING & OVERALL UNIT WIDTH IS UNLIMITED PROVIDING DIMENSIONS SPECIFIED ARE NOT EXCEEDED. NUMBER OF VERTICAL STACKED GLASS PANELS IS UNLIMITED BUT MUST FIT INSIDE MAXIMUM UNIT HEIGHT SHOWN)

NOTE: IT IS RECOMMENDED TO USE AN EXPANSION MULLION EVERY 20 FT. MAXIMUM ACROSS ALL OPENINGS OVER 20 FT. WIDE.

ALLOWABLE DESIGN PRESSURE (STORE FRONT ASSEMBLY)
PRESSURE IS CONTROLLED BY VERTICAL FRAMING MEMBERS/MULLIONS & THEIR END ANCHOR QUANTITIES. SEE MULLION PRESSURE TABLES ON SHEET 1 FOR ALLOWABLE MULLION PRESSURE CONDITIONS.

STATE OF TEXAS
WARREN W. SCHAEFER
113497
LICENSED PROFESSIONAL ENGINEER

DRAWN BY: W.R.M. | CHECKED BY: W.W.S.
PLOT: 1=24 | DATE: 03/19/13

NO.	REVISION DESCRIPTION	BY	DATE

DRAWING TITLE: IR501UT ALUMINUM LARGE MISSLE IMPACT STORE FRONT SYSTEM (WET GLAZED)

JOB INFORMATION:
KAWNEER COMPANY, INC.
555 GUTHRIDGE COURT
NORCROSS, GA 30092
770-449-5555

CONSULTANTS
W. W. SCHAEFER ENGINEERING & CONSULTING, P.A. (REG. NO. F-14980)
7480 150TH COURT NORTH
PALM BEACH GARDENS, FL 33418
PHONE: 561-744-3424

CERTIFICATION
MAR 20 2013
WARREN W. SCHAEFER, P.E.
P.E. NO. 113497

DRAWING NO. 1758T | REV.
SHEET NO. 2 OF 10

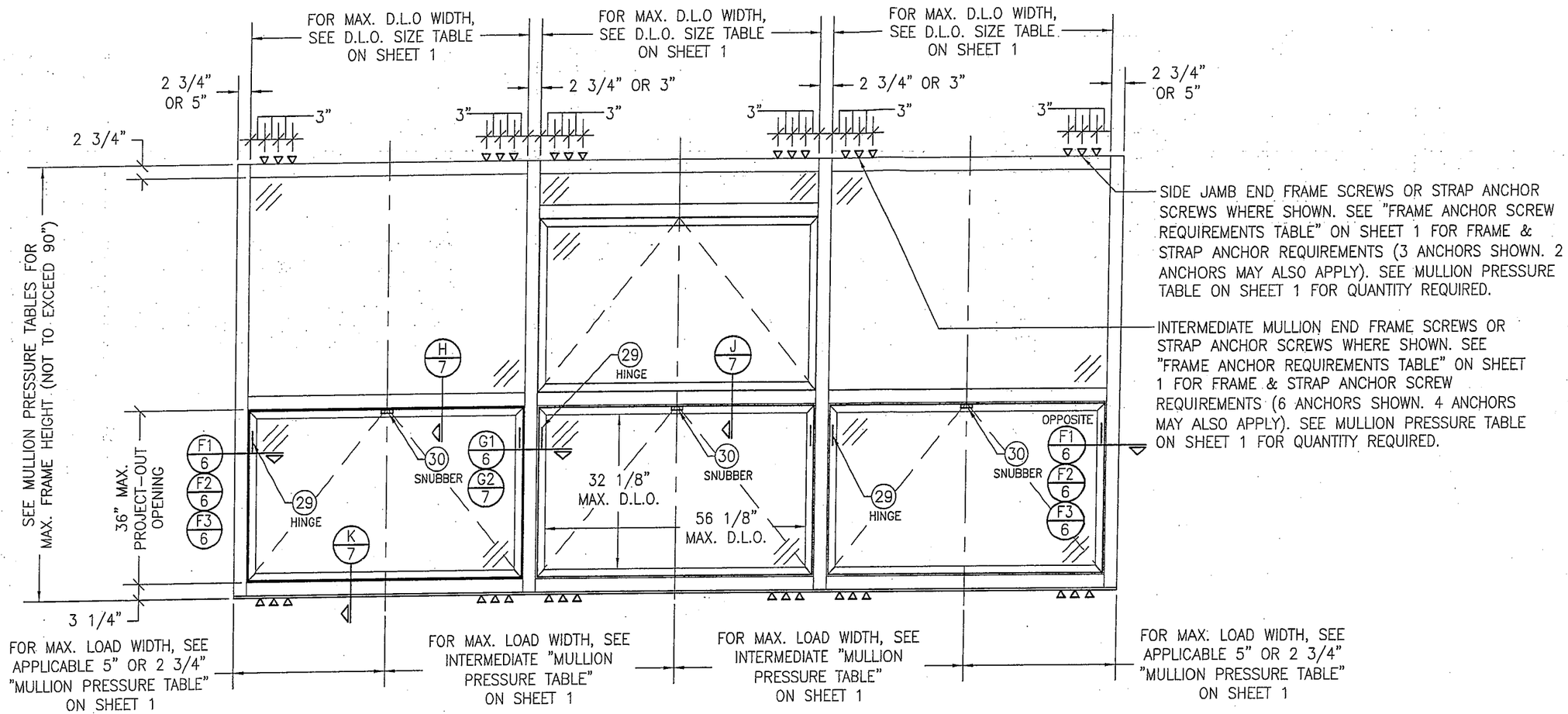

EXTERIOR ELEVATION:
STORE FRONT ASSEMBLY WITH PROJECT-OUT WINDOWS

SCALE: 1/2" = 1'-0"

(FOR STORE FRONT DETAIL & INSTALLATION NOT SHOWN, SEE ELEVATION ON SHEET 2)

ALLOWABLE DESIGN PRESSURE (STORE FRONT ASSEMBLY WITH PROJECT-OUT WINDOWS)
PRESSURE IS CONTROLLED BY VERTICAL FRAMING MEMBERS/MULLIONS & THEIR END ANCHOR QUANTITIES. SEE MULLION PRESSURE TABLES ON SHEET 1 FOR ALLOWABLE MULLION PRESSURE CONDITIONS.

STORE FRONT ASSEMBLY WITH PROJECT-OUT WINDOW NOTES:

1. PROJECT-OUT WINDOWS MAY BE PLACED ANYWHERE WITHIN THE STORE FRONT FRAMING.
2. THERE IS NO LIMIT ON THE NUMBER OF PROJECT-OUT WINDOWS THAT MAY BE PLACED IN ANY ONE BAY OF THE STORE FRONT SYSTEM. NOTE: IT IS RECOMMENDED TO USE AN EXPANSION MULLION EVERY 20 FT. MAXIMUM ACROSS ALL OPENINGS OVER 20 FT. WIDE.
3. WHEN PROJECT-OUT WINDOWS EXIST, OVERALL FRAME HEIGHT SHALL BE LIMITED AS SHOWN. POTENTIAL INCREASED HEIGHTS SHALL BE REVIEWED & APPROVED BASED ON SEPARATE CERTIFICATION FOR ONE-TIME JOB APPROVAL IF NECESSARY.

STATE OF TEXAS
WARREN W. SCHAEFER
113497
LICENSED PROFESSIONAL ENGINEER

DRAWN BY: W.R.M. | CHECKED BY: W.W.S.
PLOT: 1=24 | DATE: 03/19/13

NO.	REVISION DESCRIPTION	BY	DATE

JOB INFORMATION:
KAWNEER COMPANY, INC.
555 GUTHRIDGE COURT
NORCROSS, GA 30092
770-449-5555

DRAWING TITLE
IR501UT ALUMINUM LARGE MISSLE IMPACT
STORE FRONT SYSTEM (WET GLAZED)

CONSULTANTS
W. W. SCHAEFER ENGINEERING & CONSULTING, P.A. (REG. NO. F-14980)
7480 150TH COURT NORTH
PALM BEACH GARDENS, FL 33418
PHONE: 561-744-3424

CERTIFICATION
MAR 20 2013
WARREN W. SCHAEFER, P.E.
P.E. NO. 113497

DRAWING NO. 1758T | REV.
SHEET NO. 3 OF 10

CORNER MULLION PRESSURE TABLE (135 DEG. CORNER)

MAXIMUM FRAME HEIGHT DIMENSION (IN.)	MAXIMUM LOAD WIDTH "A" OR "B" (IN.)	ALLOWABLE PRESSURE (PSF)
121 1/4	33.5	38.7
	30.5	42.5
	27.5	47.1
	24.5	52.9
	21.5	60.2
	18.5	70.0
109 1/4	33.5	47.6
	30.5	52.3
	27.5	58.0
	24.5	65.1
	21.5	70.0
97 1/4	33.5	60.1
	30.5	66.0
	27.5	70.0
90	33.5	70.0

(1) DIMENSIONS SHOWN ARE +/-1/4".
(2) LOAD WIDTH DIMENSION TO BE CONSIDERED FOR USE WITH THIS LOAD TABLE SHALL BE THE GRATER VALUE OF "A" & "B".

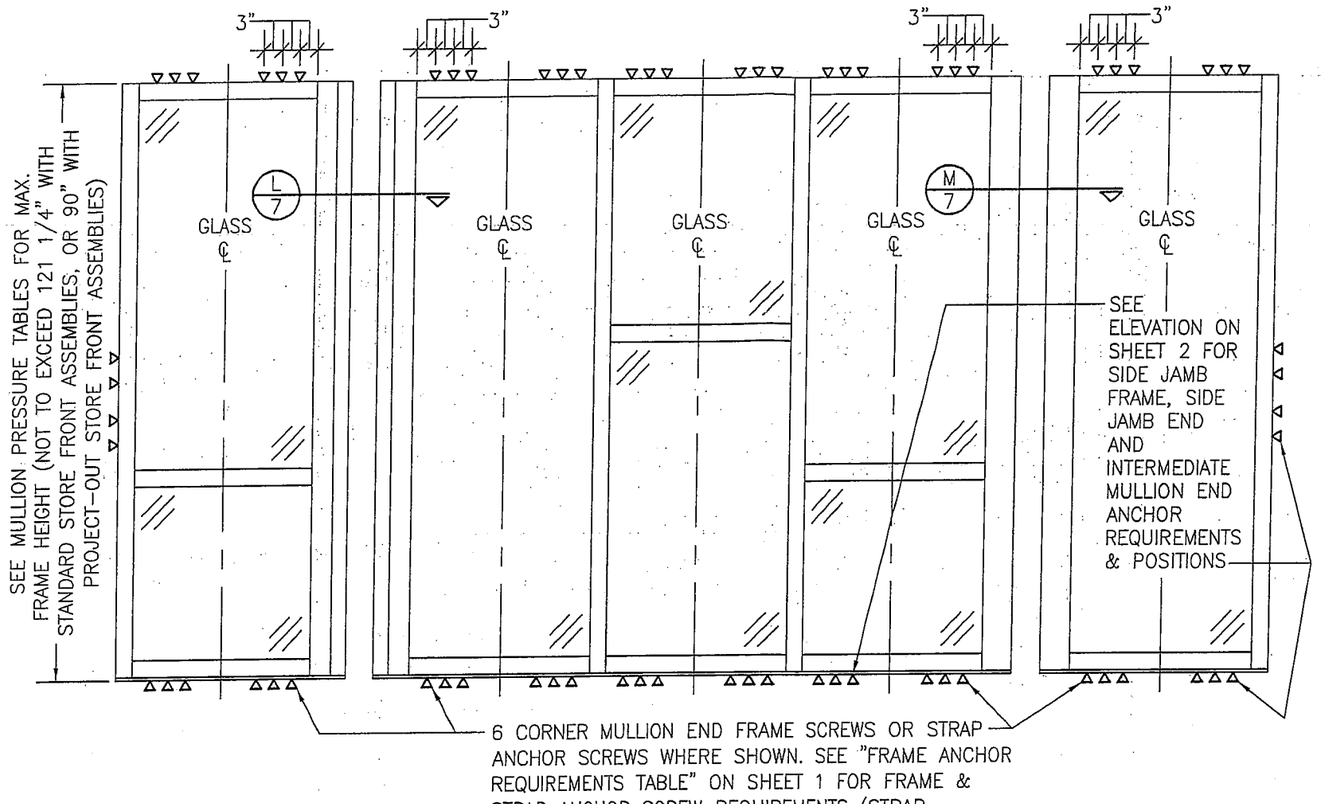

CORNER MULLION PRESSURE TABLE (90 DEG. CORNER)

MAXIMUM FRAME HEIGHT DIMENSION (IN.)	MAXIMUM LOAD WIDTH "A" OR "B" (IN.)	ALLOWABLE PRESSURE (PSF)
121 1/4	35	40.0
	32	43.8
	29	48.3
	26	53.8
	23	60.9
	20	70.0
109 1/4	35	49.3
	32	53.9
	29	59.5
	26	66.3
	23	70.0
97 1/4	35	62.2
	32	68.0
	29	70.0
90	35	70.0

(1) DIMENSIONS SHOWN ARE +/-1/4".
(2) LOAD WIDTH DIMENSION TO BE CONSIDERED FOR USE WITH THIS LOAD TABLE SHALL BE THE GRATER VALUE OF "A" & "B".

EXTERIOR ELEVATION:
MULTIPLE FIXED PANEL STORE FRONT ASSEMBLY WITH 90° AND/OR 135° CORNERS

SCALE: 1/2" = 1'-0"

(FOR ALL DETAIL INSTALLATION & MULLION LOAD TABLES NOT SHOWN, SEE LOAD TABLES & ELEVATIONS ON SHEETS 1, 2 & 3)
(WHILE SHOWN WITH BOTH 90° AND 135° CORNERS, ONE OR BOTH MAY APPLY ON ANY JOB)
(PROJECT-OUT WINDOWS ALSO APPLY TO THIS ELEVATION)

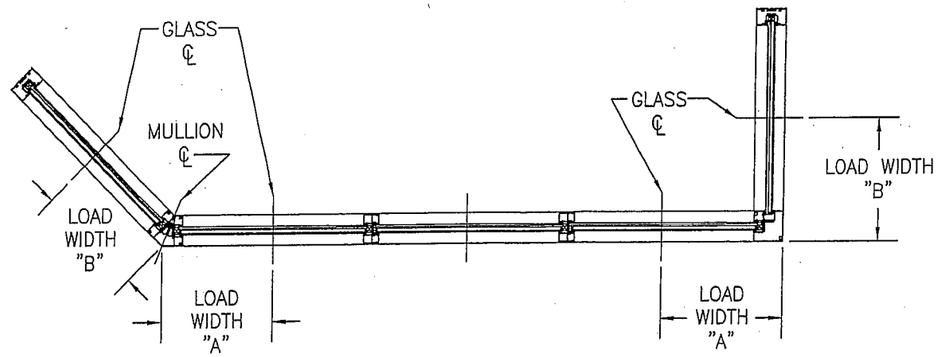

STATE OF TEXAS
WARREN W. SCHAEFER
113497
LICENSED PROFESSIONAL ENGINEER

DRAWN BY: W.R.M.
CHECKED BY: W.W.S.
PLOT: 1=24
DATE: 03/19/13

NO.	REVISION DESCRIPTION	BY	DATE

DRAWING TITLE: IR501UT ALUMINUM LARGE MISSLE IMPACT STORE FRONT SYSTEM (WET GLAZED)

JOB INFORMATION:
KAWNEER COMPANY, INC.
555 GUTHRIDGE COURT
NORCROSS, GA 30092
770-449-5555

CONSULTANTS
W. W. SCHAEFER ENGINEERING & CONSULTING, P.A. (REG. NO. F-14980)
7480 150TH COURT NORTH
PALM BEACH GARDENS, FL 33418
PHONE: 561-744-3424

CERTIFICATION
MAR 20 2013
WARREN W. SCHAEFER, P.E.
P.E. NO. 113497

DRAWING NO. 1758T
REV.
SHEET NO. 4 OF 10

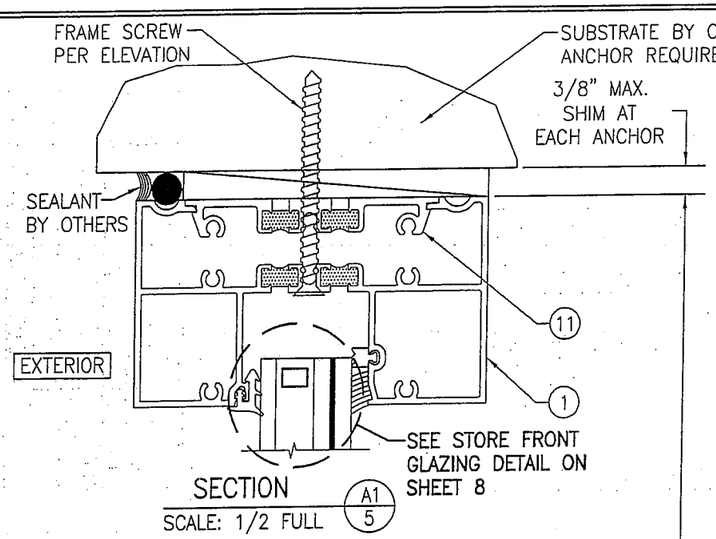

SECTION A1/5
SCALE: 1/2 FULL

(FRAME SCREW MOUNT)

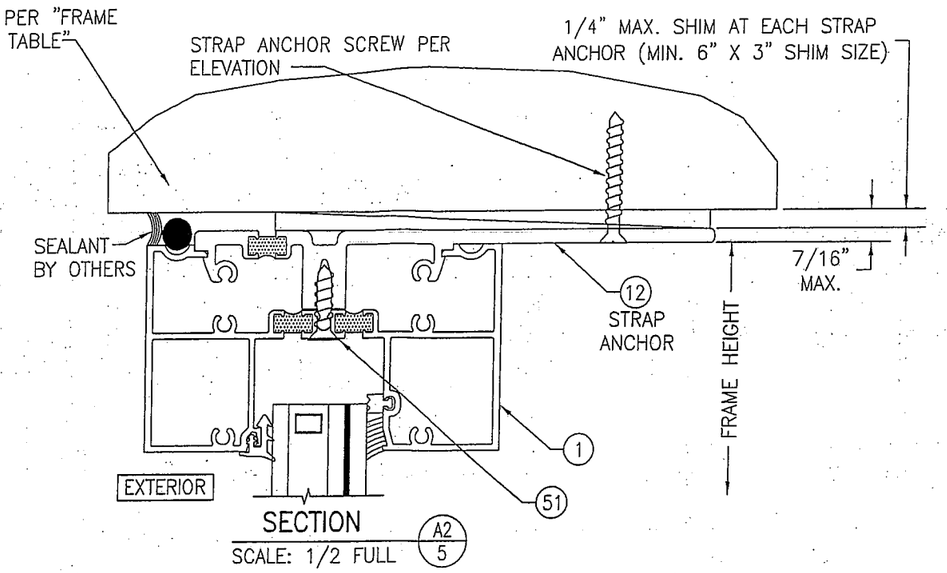

SECTION A2/5
SCALE: 1/2 FULL

(STRAP ANCHOR MOUNT)
(FOR DETAIL NOT SHOWN, SEE SECTION A1/5)

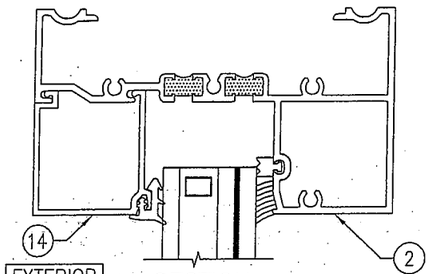

SECTION A3/5
SCALE: 1/2 FULL

(FOR INSTALLATION & DETAIL NOT SHOWN, SEE SECTIONS A1/5 & A2/5)

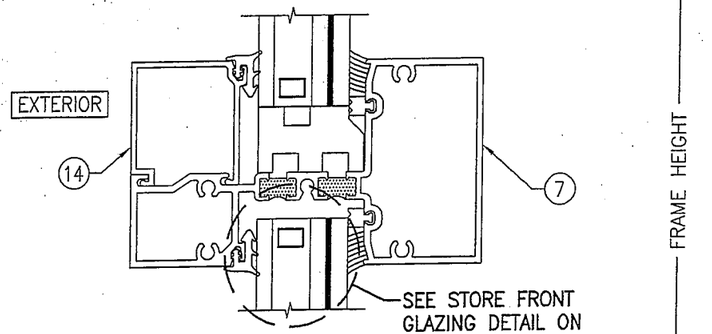

SECTION C/5
SCALE: 1/2 FULL

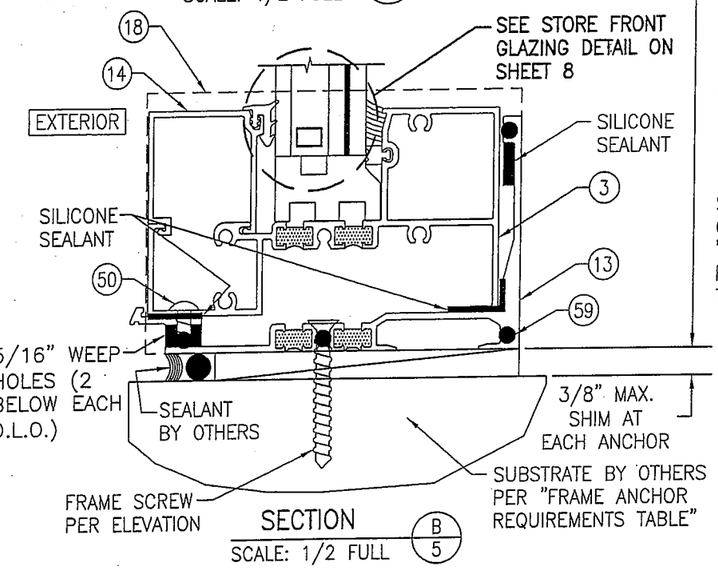

SECTION B/5
SCALE: 1/2 FULL

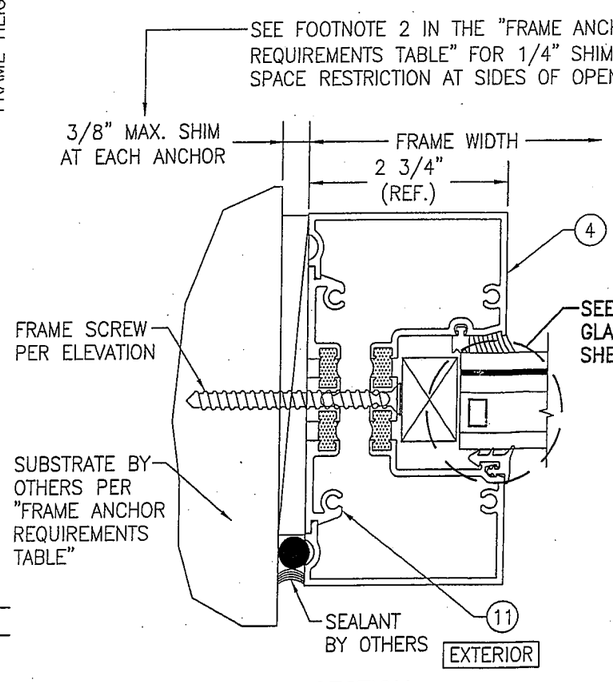

SECTION D1/5
SCALE: 1/2 FULL

(FRAME SCREW MOUNT)

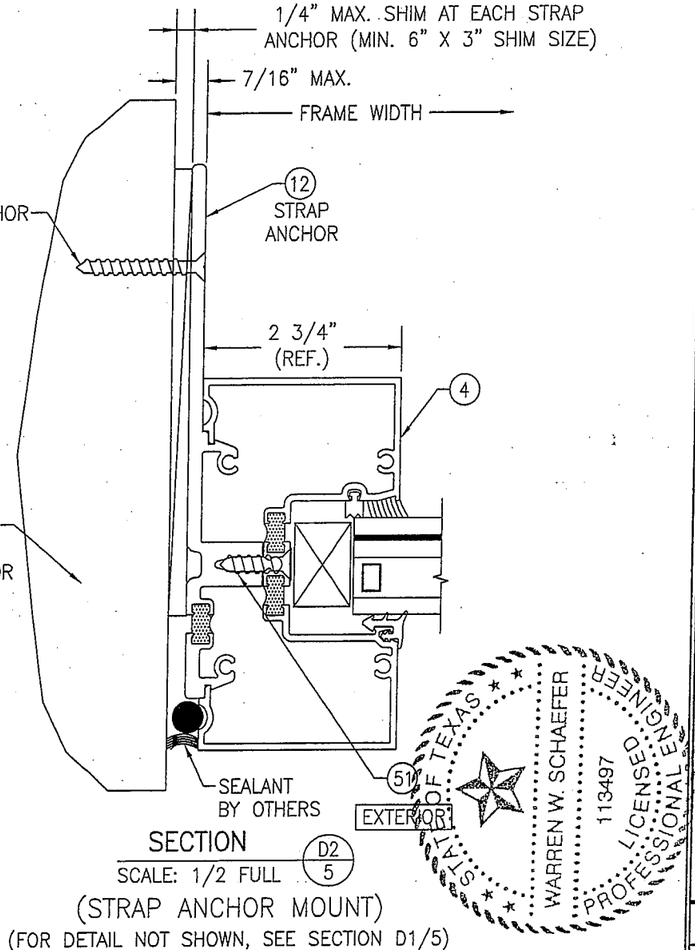

SECTION D2/5
SCALE: 1/2 FULL

(STRAP ANCHOR MOUNT)
(FOR DETAIL NOT SHOWN, SEE SECTION D1/5)

NO.	REVISION DESCRIPTION	BY	DATE

DRAWN BY: W.R.M. | CHECKED BY: W.W.S.
PLOT: 1=2 | DATE: 03/19/13

DRAWING TITLE: IR501UT ALUMINUM LARGE MISSLE IMPACT STORE FRONT SYSTEM (WET GLAZED)

JOB INFORMATION:

KAWNEER COMPANY, INC.
555 GUTHRIDGE COURT
NORCROSS, GA 30092
770-449-5555

CONSULTANTS
W. W. SCHAEFER ENGINEERING & CONSULTING, P.A. (REG. NO. F-14980)
7480 150TH COURT NORTH
PALM BEACH GARDENS, FL 33418
PHONE: 561-744-3424

CERTIFICATION
MAR 20 2013
WARREN W. SCHAEFER, P.E.
P.E. NO. 113497

STATE OF TEXAS
WARREN W. SCHAEFER
113497
LICENSED PROFESSIONAL ENGINEER

DRAWING NO. 1758T | REV.
SHEET NO. 5 OF 10

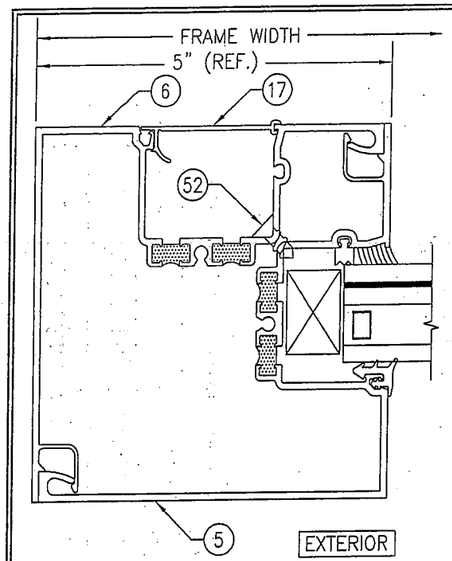

SECTION D3/6
SCALE: 1/2 FULL

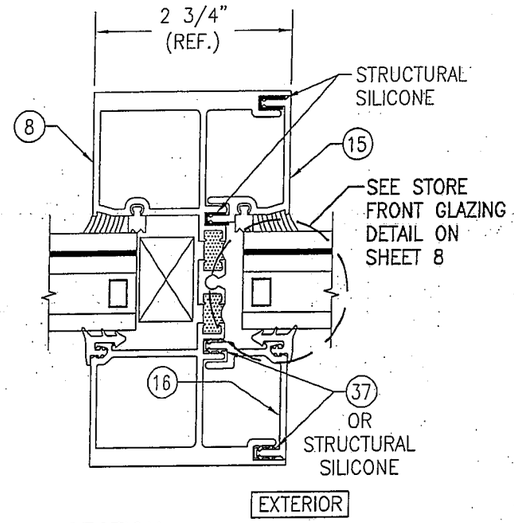

SECTION E1/6
SCALE: 1/2 FULL
(STANDARD MULLION)

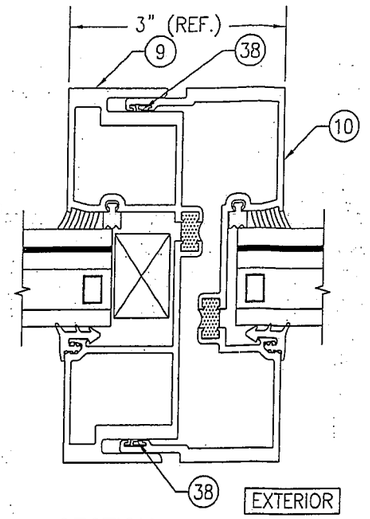

SECTION E2/6
SCALE: 1/2 FULL
(EXPANSION MULLION)
(FOR DETAIL NOT SHOWN, SEE SECTION E1/6)

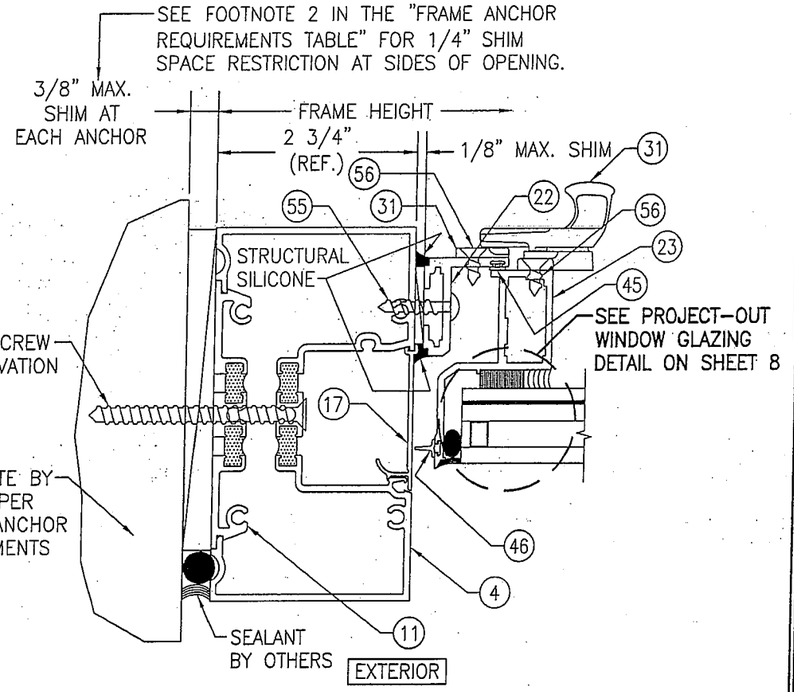

SECTION F1/6
SCALE: 1/2 FULL
(FRAME SCREW MOUNT)

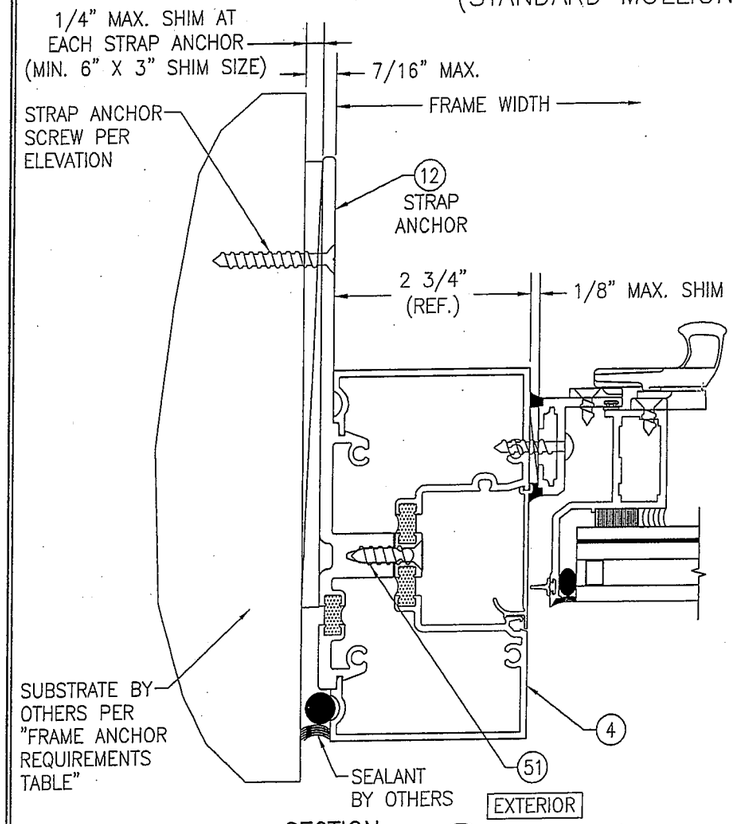

SECTION F2/6
SCALE: 1/2 FULL
(STRAP ANCHOR MOUNT)
(FOR DETAIL NOT SHOWN, SEE SECTION F1/6)

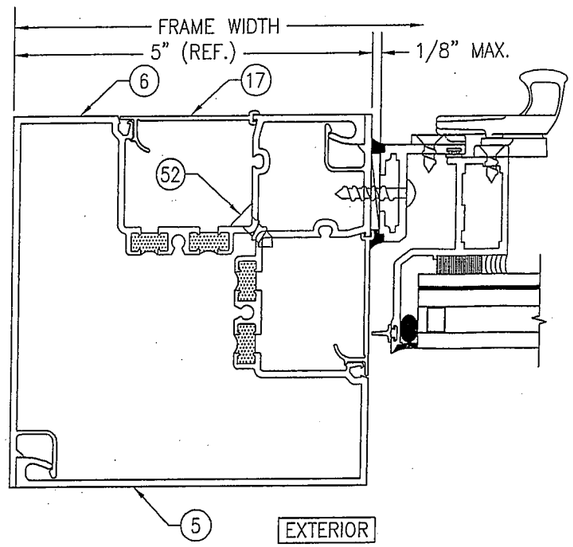

SECTION F3/6
SCALE: 1/2 FULL
(FOR DETAIL NOT SHOWN, SEE SECTION F1/6)

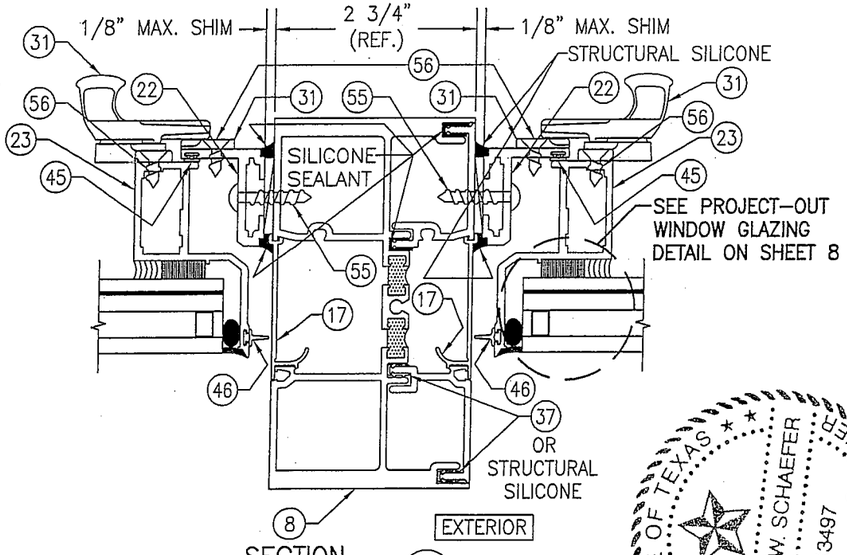

SECTION G1/6
SCALE: 1/2 FULL
(STANDARD MULLION)

NO.	REVISION DESCRIPTION	BY	DATE

DRAWN BY: W.R.M. | CHECKED BY: W.W.S.
PLOT: 1=2 | DATE: 03/19/13

DRAWING TITLE: IR501UT ALUMINUM LARGE MISSILE IMPACT STORE FRONT SYSTEM (WET GLAZED)

JOB INFORMATION:

KAWNEER COMPANY, INC.
555 GUTHRIDGE COURT
NORCROSS, GA. 30092
770-449-5555

CONSULTANTS
W. W. SCHAEFER ENGINEERING & CONSULTING, P.A. (REG. NO. F-14980)
7480 150TH COURT NORTH
PALM BEACH GARDENS, FL 33418
PHONE: 561-744-3424

STATE OF TEXAS
WARREN W. SCHAEFER
113497
LICENSED
PROFESSIONAL ENGINEER

MAR 20 2013

WARREN W. SCHAEFER, P.E.
P.E. NO. 113497

DRAWING NO. 1758T | REV.
SHEET NO. 6 OF 10

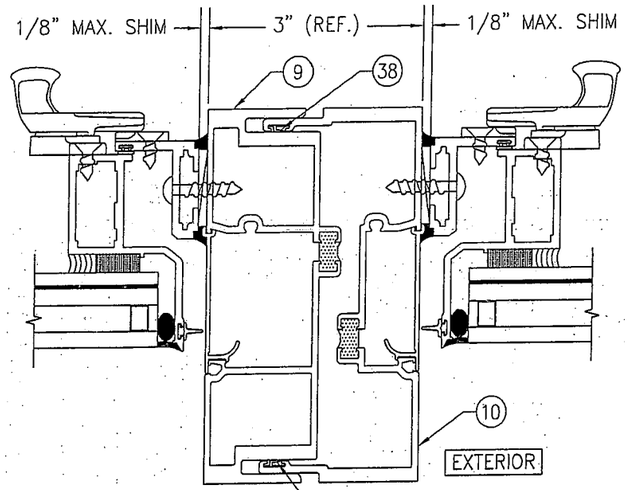

SECTION G2/7
SCALE: 1/2 FULL

(EXPANSION MULLION)

(FOR DETAIL NOT SHOWN, SEE SECTION G1/6)

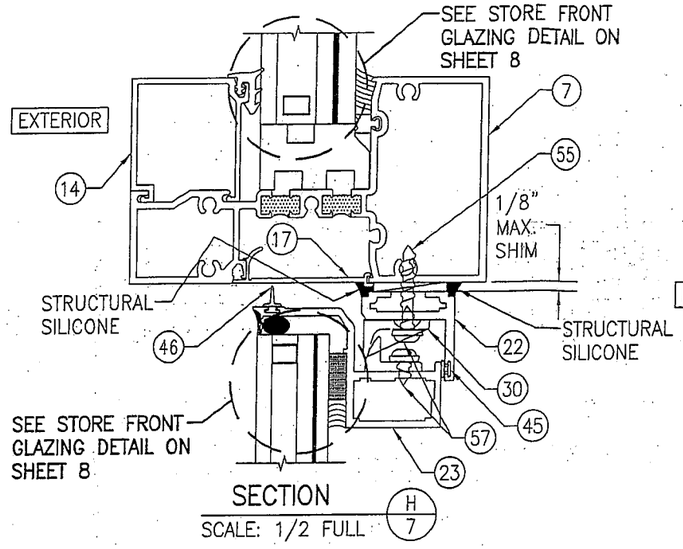

SECTION H/7
SCALE: 1/2 FULL

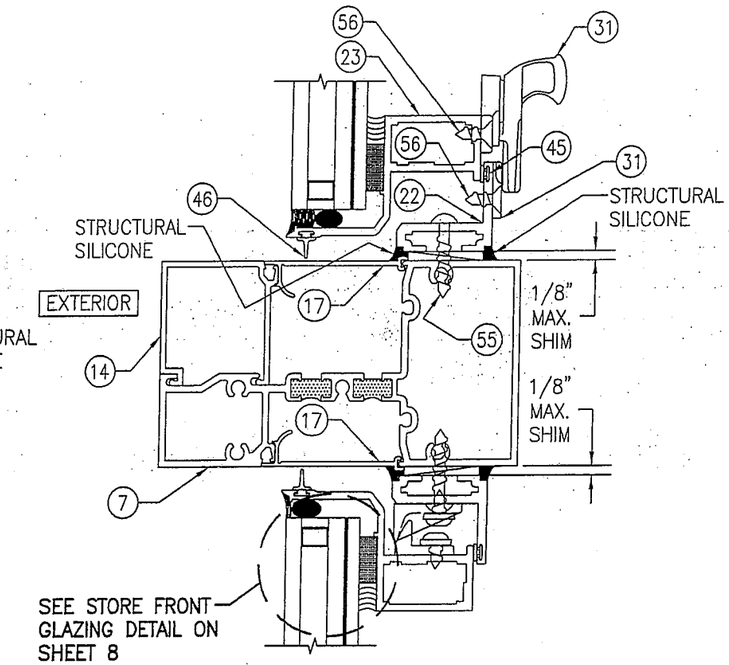

SECTION J/7
SCALE: 1/2 FULL

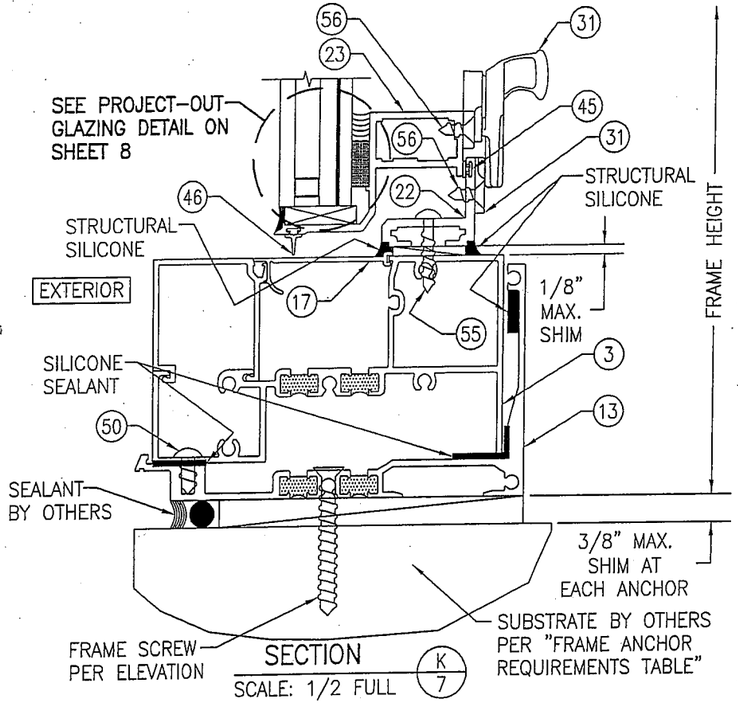

SECTION K/7
SCALE: 1/2 FULL

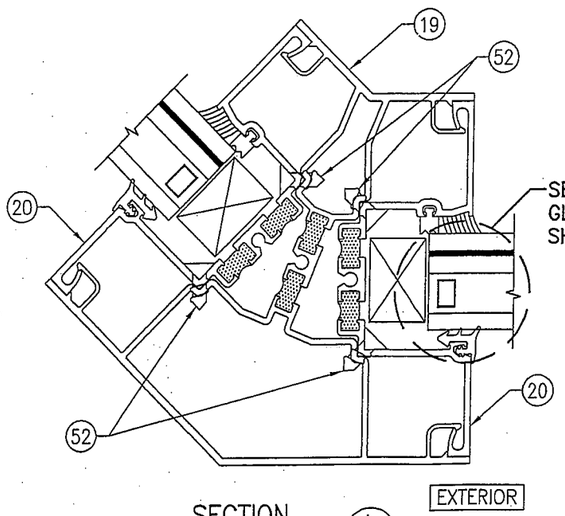

SECTION L/7
SCALE: 1/2 FULL

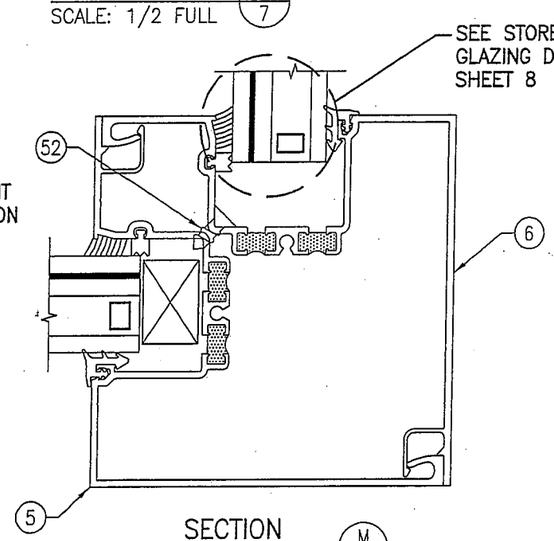

SECTION M/7
SCALE: 1/2 FULL

NO.	REVISION DESCRIPTION	BY	DATE

DRAWN BY: W.R.M. | CHECKED BY: W.W.S.
PLOT: 1=2 | DATE: 03/19/13

DRAWING TITLE: IR501UT ALUMINUM LARGE MISSLE IMPACT STORE FRONT SYSTEM (WET GLAZED)

JOB INFORMATION:

KAWNEER COMPANY, INC.
555 GUTHRIDGE COURT
NORCROSS, GA 30092
770-449-5555

CONSULTANTS
W. W. SCHAEFER ENGINEERING & CONSULTING, P.A. (REG. NO. F-14980)
7480 150TH COURT NORTH
PALM BEACH GARDENS, FL 33418
PHONE: 561-744-3424

CERTIFICATION

STATE OF TEXAS
WARREN W. SCHAEFER
113497
PROFESSIONAL ENGINEER

MAR 20 2013

WARREN W. SCHAEFER, P.E.
P.E. NO. 113497

DRAWING NO. 1758T | REV.

SHEET NO. 7 OF 10

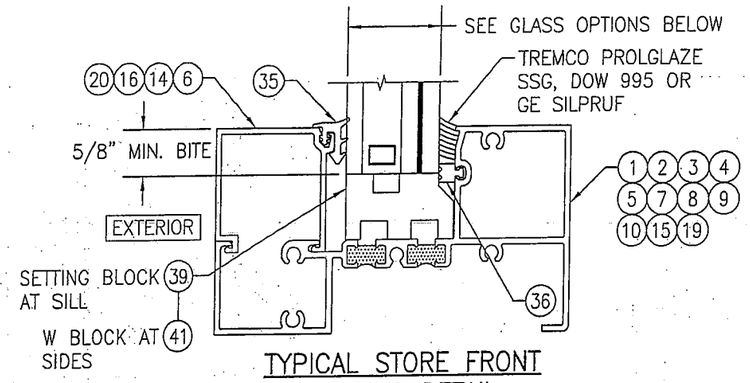

TYPICAL STORE FRONT GLAZING DETAIL

GLASS OPTIONS:

OPTION 1: 1 5/16" THICK I.G. GLASS (1/4" HT. ST. OR TEMP. EXTERIOR; 1/2" SPACER/1/4" HT. ST./0.09 DUPONT BUTACITE PVB/1/4" HT. ST. INTERIOR)

OPTION 2: 1 5/16" THICK I.G. GLASS (1/4" HT. ST. OR TEMP. EXTERIOR; 1/2" SPACER/1/4" HT. ST./0.09 SOLUTIA SAFLEX/1/4" HT. ST. INTERIOR)

NOTE: EXTERIOR GLASS PANE OF I.G. GLAZING SHALL BE TEMPERED WHEN STORE FRONT GLASS IS INSTALLED IN A SMALL MISSILE IMPACT LOCATION OF A BUILDING OR WHEN GLASS IS REQUIRED TO BE SAFETY GLAZED.

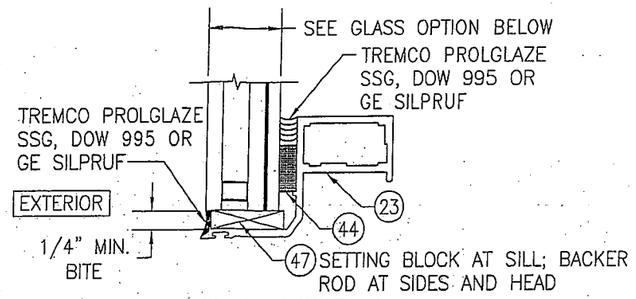

TYPICAL PROJECT-OUT WINDOW GLAZING DETAIL

GLASS OPTION:

OPTION 1: 1" THICK I.G. GLASS (3/16" TEMP. EXTERIOR; 3/8" SPACER/3/16" HT. ST./0.09 DUPONT BUTACITE PVB/3/16" HT. ST. INTERIOR)

STORE FRONT PARTS

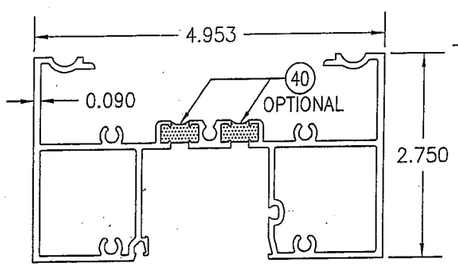

1 HEAD FRAME (OPTION 1)

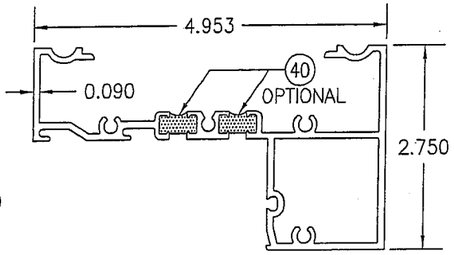

2 HEAD FRAME (OPTION 2)

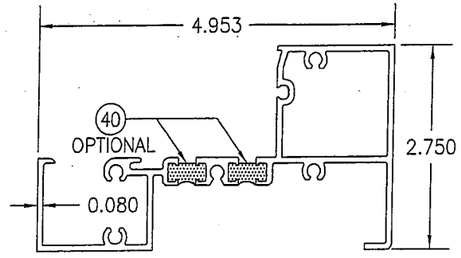

3 SILL FRAME

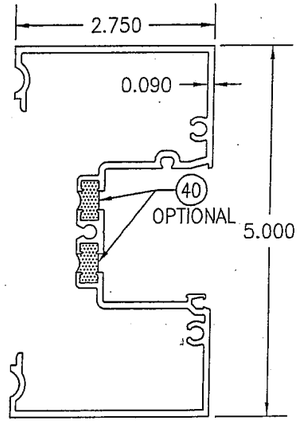

4 JAMB FRAME (OPTION 1)

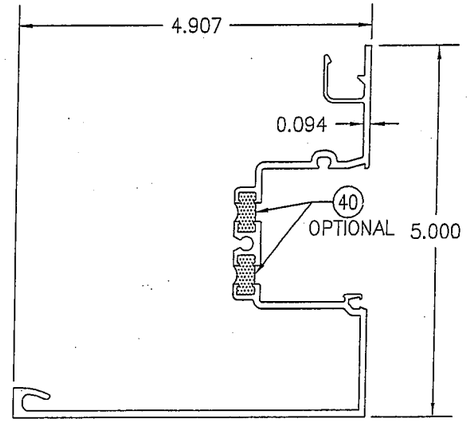

5 JAMB FRAME (OPTION 2) & 90° CORNER MULLION (PART 1 OF 2)

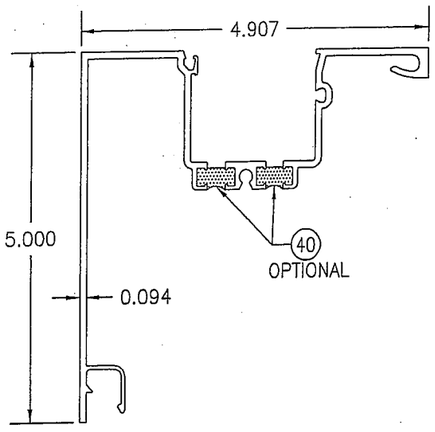

6 JAMB FRAME (OPTION 2) & 90° CORNER MULLION (PART 1 OF 2)

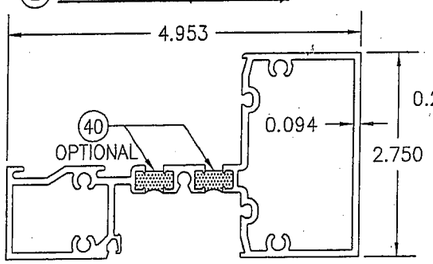

7 MID-RAIL

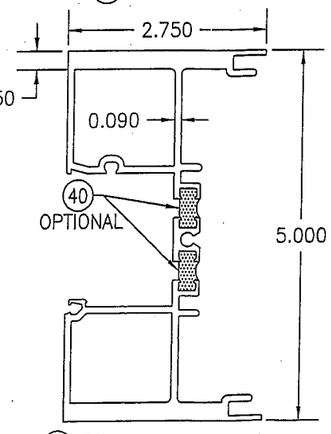

8 STANDARD MULLION (OPTION 1)

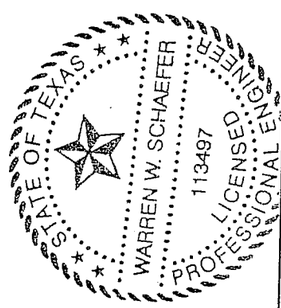

NO.	REVISION DESCRIPTION	BY	DATE

DRAWN BY: W.R.M. | CHECKED BY: W.W.S.
PLOT: 1=2 | DATE: 03/19/13

DRAWING TITLE: IR501UT ALUMINUM LARGE MISSLE IMPACT STORE FRONT SYSTEM (WET GLAZED)

JOB INFORMATION:

KAWNEER COMPANY, INC.
555 GUTHRIDGE COURT
NORCROSS, GA 30092
770-449-5555

CONSULTANTS
W. W. SCHAEFER ENGINEERING & CONSULTING, P.A. (REG. NO. F-14980)
7480 150TH COURT NORTH
PALM BEACH GARDENS, FL 33418
PHONE: 561-744-3424

CERTIFICATION
MAR 20 2013
WARREN W. SCHAEFER, P.E.
P.E. NO. 113497

DRAWING NO. 1758T | REV.
SHEET NO. 8 OF 10

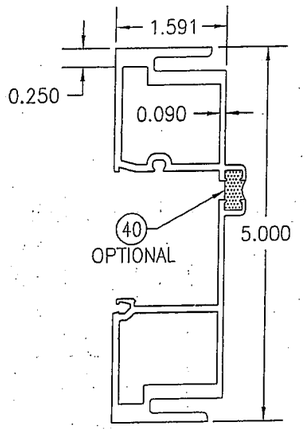

(9) FEMALE EXPANSION MULLION (OPTION 2)

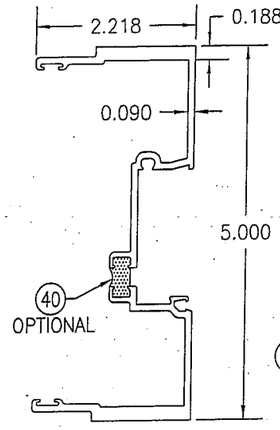

(10) MALE EXPANSION MULLION (OPTION 2)

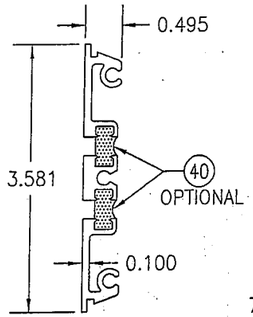

(11) FRAME SCREW FILLER
LENGTH = 6" TO 12"

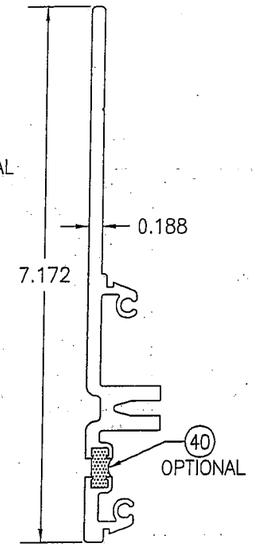

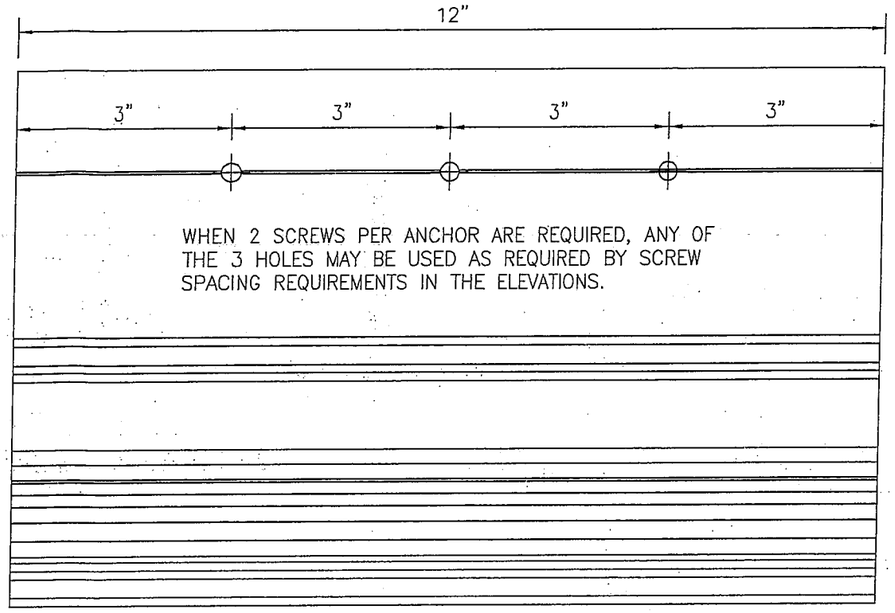

(12) STRAP ANCHOR

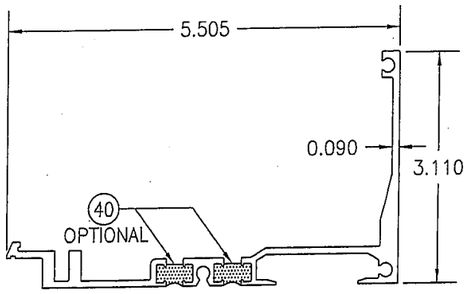

(13) SUB-SILL

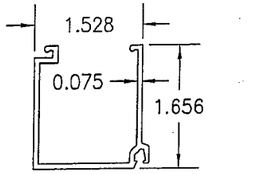

(14) GLAZING BEAD/FRAME FILLER

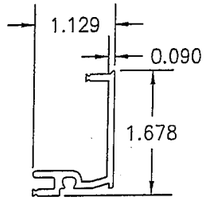

(15) INTERIOR MULLION INSERT

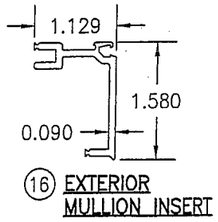

(16) EXTERIOR MULLION INSERT

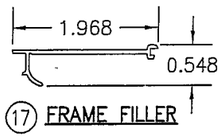

(17) FRAME FILLER

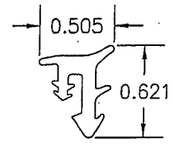

(35) GLAZING GASKET

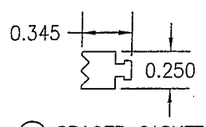

(36) SPACER GASKET

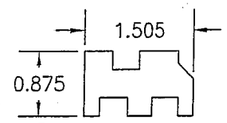

(39) SETTING BLOCK
LENGTH = 4.125

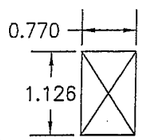

(41) W BLOCK
LENGTH = 0.770

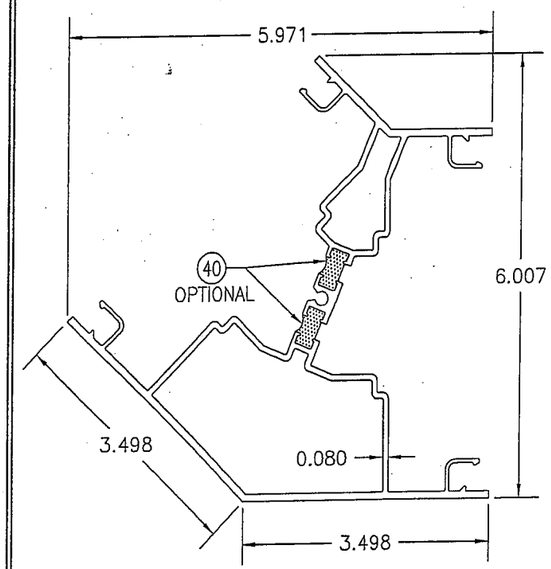

(19) 135° CORNER MULLION

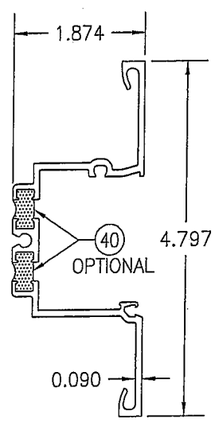

(20) DEEP POCKET MULLION INSERT

STORE FRONT PARTS

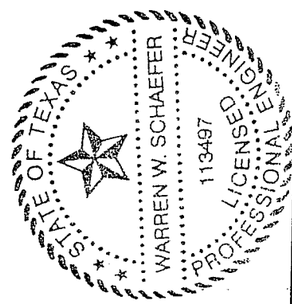

NO.	REVISION DESCRIPTION	BY	DATE

DRAWN BY: W.R.M. | CHECKED BY: W.W.S.
PLOT: 1=2 | DATE: 03/19/13

DRAWING TITLE: IR501UT ALUMINUM LARGE MISSILE IMPACT STORE FRONT SYSTEM (WET GLAZED)
JOB INFORMATION:

CONSULTANTS
W. W. SCHAEFER ENGINEERING & CONSULTING, P.A. (REG. NO. F-14980)
7480 150TH COURT NORTH
PALM BEACH GARDENS, FL 33418
PHONE: 561-744-3424

KAWNEER COMPANY, INC.
555 GUTHRIDGE COURT
NORCROSS, GA 30092
770-449-5555

CERTIFICATION
MAR 20 2013
WARREN W. SCHAEFER, P.E.
P.E. NO. 113497

DRAWING NO. 1758T | REV.
SHEET NO. 9 OF 10

ITEM #	ITEM DESCRIPTION	MANUFACTURER/NOTES
	STORE FRONT PARTS	
1	HEAD FRAME (OPTION 1)	6063–T6 ALUMINUM
2	HEAD FRAME (OPTION 2)	6063–T6 ALUMINUM
3	SILL FRAME	6063–T6 ALUMINUM
4	JAMB FRAME (OPTION 1)	6063–T6 ALUMINUM
5	JAMB FRAME (OPTION 2) & 90° CORNER MULLION (PART 1 OF 2)	6063–T6 ALUMINUM
6	JAMB FRAME (OPTION 2) & 90° CORNER MULLION (PART 2 OF 2)	6063–T6 ALUMINUM
7	MID–RAIL	6063–T6 ALUMINUM
8	STANDARD MULLION (OPTION 1)	6063–T6 ALUMINUM
9	FEMALE EXPANSION MULLION (OPTION 2)	6063–T6 ALUMINUM
10	MALE EXPANSION MULLION (OPTION 2)	6063–T6 ALUMINUM
11	FRAME SCREW FILLER	6063–T6 ALUMINUM
12	STRAP ANCHOR	6063–T6 ALUMINUM
13	SUB–SILL	6063–T6 ALUMINUM
14	GLAZING BEAD/FRAME FILLER	6063–T6 ALUMINUM
15	INTERIOR MULLION INSERT	6063–T6 ALUMINUM
16	EXTERIOR MULLION INSERT	6063–T6 ALUMINUM
17	POCKET FILLER	ABS PLASTIC
18	SILL END DAM PLATE (5.281"X3.5"X0.062" THICK)	PLASTIC
19	135° CORNER MULLION	6063–T6 ALUMINUM
20	DEEP POCKET MULLION INSERT	6063–T6 ALUMINUM
	PROJECT–OUT GLASS VENT PARTS	
22	FRAME	6063–T6 ALUMINUM
23	STILE & RAIL	6063–T6 ALUMINUM
24	FRAME CORNER KEY	6063–T6 ALUMINUM
25	SASH CORNER KEY	6063–T6 ALUMINUM
	PROJECT–OUT GLASS VENT HARDWARE	
29	4" BAR HINGE	ADVANTAGE 316–AT
30	SNUBBER DRIVER & VENT DEFLECTION STOP	KENCO PLASTICS; NYLON WITH GLASS FILL
31	CAM LOCK & LOCK STRIKE 3 REQ'D AT BOTTOM RAIL; 1 REQ'D EACH STILE	BRONZE CRAFT US–25–D; WHITE BRONZE

ITEM #	ITEM DESCRIPTION	MANUFACTURER/NOTES
	STORE FRONT SEALS & SEALANTS	
35	GLAZING GASKET	TREMCO TR–14815E CLOSED CELLULAR EPDM (70 DUROMETER)
36	SPACER GASKET	POLYPROPYLENE & SANDOPRENE; KRP 60 +/–5 DUROMETER
37	SEALING GASKET	PVC
38	FIXED GASKET	KRP POLYPROPYLENE & TPV
39	SETTING BLOCK	EPDM (DUROMETER = 85 +/–5)
40	OPTIONAL POURED IN DEBRIDGING/ THERMAL BREAK	STRUCTURAL THERMAL BARRIER POLYMER (UNIVERSAL NO–TAPE 303–12T BY AZON)
41	W BLOCK	EPDM (DUROMETER = 85 +/–5)
	PROJECT–OUT GLASS VENT SEALS & SEALANTS	
44	GLAZING TAPE	POLYURETHANE FOAM
45	BULB GASKET	AMESBURY #32005 POLYPROPYLENE
46	KERF GASKET	ASTRO PLASTICS #C–9131 POLYPROPYLENE & SANDOPRENE
47	SETTING BLOCK	EPDM (DUROMETER = 85 +/–5)
	STORE FRONT FASTENERS	
50	1/4–20 X 7/16" PHTC	QTY = 3 AT EA. SUB–SILL END (2" FROM ENDS AND 2.5" O.C.)
51	1/4–20 X 1" PHTC TYPE "D" OR "F"	QUANTITY TO MATCH THAT OF STRAP ANCHOR INSTALLATION SCREWS (SPACED 2.5" O.C.)
52	1/4–20 X 5/8" FHTC TYPE "D"	WITHIN 6" FROM MULL ENDS & 18" MAX. O.C.
	PROJECT–OUT GLASS VENT FASTENERS	
55	NO. 10 X 1" PHTF "AB"	WITHIN 6" FROM EA. END & 18" MAX. O.C.
56	NO. 10 X 1/2" FHTF TYPE "B"	2 PER EACH CAM LOCK & KEEPER
57	NO. 10–16 X 5/16" CRIMPTITE TYPE "B"	2 PER EACH SNUBBER DRIVER & KEEPER
58	NO. 10–16 X 7/16" PHTF TYPE "B"	3 PER HINGE BAR
59	NO. 12 X 1" PHTF "AB"	4 PER END DAM

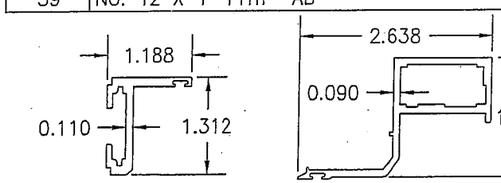

(22) FRAME (23) STILE & RAIL

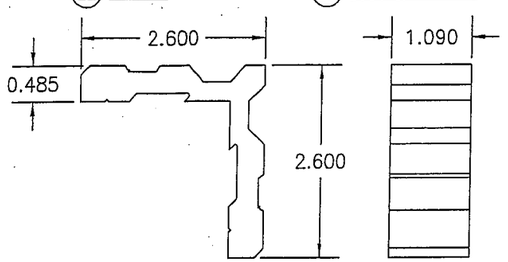

(24) FRAME CORNER KEY

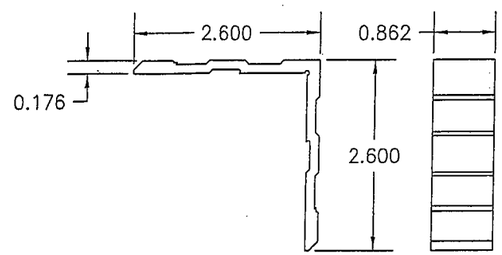

(25) SASH CORNER KEY

PROJECT–OUT WINDOW PARTS

STATE OF TEXAS WARREN W. SCHAEFER 113497 LICENSED PROFESSIONAL ENGINEER

DRAWN BY: W.R.M.	CHECKED BY: W.W.S.
PLOT: 1=2	DATE: 03/19/13

NO.	REVISION DESCRIPTION	BY	DATE

DRAWING TITLE: IR501UT ALUMINUM LARGE MISSLE IMPACT STORE FRONT SYSTEM (WET GLAZED)

JOB INFORMATION:

KAWNEER COMPANY, INC.
555 GUTHRIDGE COURT
NORCROSS, GA 30092
770–449–5555

CONSULTANTS
W. W. SCHAEFER ENGINEERING & CONSULTING, P.A. (REG. NO. F–14980)
7480 150TH COURT NORTH
PALM BEACH GARDENS, FL 33418
PHONE: 561–744–3424

CERTIFICATION
MAR 20 2013
WARREN W. SCHAEFER, P.E. NO. 113497 P.E.

DRAWING NO. 1758T | REV.

SHEET NO. 10 OF 10