RELIANCE STORMMAX IMPACT–RESISTANT SSG CURTAIN WALL SYSTEM
FOR USE IN HURRICANE ZONES REQUIRING LARGE MISSILE IMPACT PROTECTION.

GENERAL NOTES:

1. RELIANCE STORMMAX IMPACT RESISTANT SSG CURTAIN WALL SYSTEM LARGE MISSILE IMPACT INSULATED LAMINATED GLASS, SHOWN ON THIS PRODUCT APPROVAL DOCUMENT (P.A.D.) HAS BEEN VERIFIED FOR COMPLIANCE IN ACCORDANCE WITH THE 2006 EDITION OF THE INTERNATIONAL BUILDING CODE, (I.B.C) AND INTERNATIONAL RESIDENTIAL CODE, (I.R.C) WITH THE 2006 TEXAS REVISIONS, EFFECTIVE JANUARY 1, 2008.

   DESIGN WIND LOADS SHALL BE DETERMINED AS PER SECTION 1609 OF THE INTERNATIONAL BUILDING CODE, FOR A BASIC WIND SPEED AS REQUIRED BY THE JURISDICTION WHERE PRODUCT WILL BE INSTALLED, AND FOR A DIRECTIONALITY FACTOR Kd = 0.85, IN ACCORDANCE WITH ASCE 7–05 STANDARD, AND SHALL NOT EXCEED THE DESIGN PRESSURE RATING INDICATED ON NOTE 2.

   IN ORDER TO VERIFY THAT ANCHORS ON THIS P.E.D., AS TESTED, WERE NOT OVERSTRESSED, A 33% INCREASE IN ALLOWABLE STRESS FOR WIND LOADS WAS NOT USED IN THEIR ANALYSIS. FASTENERS SPACING TO WOOD HAS BEEN DETERMINED IN ACCORDANCE WITH N.D.S. 2005.

   THIS PRODUCT'S ADEQUACY FOR IMPACT AND CYCLIC RESISTANCE HAS BEEN VERIFIED IN ACCORDANCE WITH SECTIONS 1609.1.4 AND R301.2.1.2 OF THE ABOVE MENTIONED CODES RESPECTIVELY, AS PER FLORIDA BUILDING CODE HIGH VELOCITY HURRICANE ZONES PROTOCOLS TAS–201, TAS–202, TAS–203, PER ARCHITECTURAL TESTING LAB REPORTS # A8744.01–801–18, & CONSTRUCTION CONSULTING LAB INTERNATIONAL REPORT # CCLI–11–230 AND AS PER SUBMITTED STRUCTURAL CALCULATIONS, PERFORMED AS PER SECTION 1604 OF THE ABOVE MENTIONED BUILDING CODE.

2. MAXIMUM DESIGN PRESSURE RATING FOR THIS CURTAIN WALL SHALL BE AS SHOWN ON SHEETS 8, 9A, 10A, 12 AND 13.

3. THIS PRODUCT WILL NOT REQUIRE A HURRICANE PROTECTION DEVICE FOR INSTALLATIONS UP TO 30 FEET ABOVE GRADE.

4. THIS PRODUCT IS APPROVED FOR AIR/WATER INFILTRATION (15.0 PSF WATER PRESSURE).

5. RELIANCE STORMMAX IMPACT RESISTANT SSG CURTAIN WALL SYSTEM LARGE MISSILE IMPACT INSULATED LAMINATED GLASS, SHALL COMPLY WITH SECTION 2406 OF THE INTERNATIONAL BUILDING CODE.

6. ALL STEEL FRAMING SHALL BE WELDED IN ACCORDANCE WITH THE AMERICAN WELDING SOCIETY A.W.S. D.1.1 REGULATIONS. USE CERTIFIED WELDERS. USE E–70XX ELECTRODES. ALL JOINT WELDING BETWEEN ANGLES AND STEEL STRUCTURE SHALL BE 3/16" FILLET WELD TYPE.

7. PROVIDE 1/2" MAX. LOAD BEARING SHIM (TYP.), WHEN ALLOWED BY THIS DRAWING.

8. SEE ANCHOR SCHEDULES ON SHEETS 12 AND 13 FOR ANCHOR TYPE IDENTIFICATION AND SPACING.

9. REMAINING COMPONENTS FOR THIS PRODUCT SHALL BE AS INDICATED ON BILL OF MATERIALS, SHEETS 4 & 5 OF THIS DRAWING.

10. ALL ALUMINUM EXTRUSIONS IN CONTACT WITH STEEL, CONCRETE, GROUT FILLED CONCRETE BLOCK AND WOOD SHALL COMPLY WITH SECTION 6.7 OF THE ALUMINUM DESIGN MANUAL 2005 EDITION.

11. SHOP DRAWINGS PREPARED BASED ON THIS T.D.I REPORT AND TAKING INTO ACCOUNT THE SPECIFIC JOB CONDITIONS, SHALL BE SUBMITTED TO THE BUILDING OFFICIAL AS PART OF THE PERMIT DOCUMENTS.

12. SUBSTRATE MATERIAL NOTED ON THESE DRAWINGS AS "BY OTHERS" MUST WITHSTAND THE LOADS IMPOSED BY THE CURTAIN WALL SYSTEM.

13. THIS PRODUCT'S INSTALLATION SHALL COMPLY WITH ALL SPECS INDICATED IN THIS DRAWING PLUS ANY BUILDING AND ZONING REGULATIONS PROVIDED BY THE JURISDICTION WHERE PERMIT IS APPLIED TO.

14. (a) THIS P.E.D. PREPARED BY THIS ENGINEER IS GENERIC AND DOES NOT PROVIDE INFORMATION FOR A SITE SPECIFIC PROJECT; i.e. WHERE THE SITE CONDITIONS DEVIATE FROM THE P.E.D.

    (b) CONTRACTOR TO BE RESPONSIBLE FOR THE SELECTION, PURCHASE AND INSTALLATION INCLUDING LIFE SAFETY OF THIS PRODUCT, BASED ON THIS P.E.D., PROVIDED HE/SHE DOES NOT DEVIATE FROM THE CONDITIONS DETAILED ON THIS DOCUMENT. CONSTRUCTION SAFETY AT SITE IS THE CONTRACTOR'S RESPONSIBILITY.

    (c) THIS P.E.D. WILL BE CONSIDERED INVALID IF ALTERED BY ANY MEANS.

    (d) SITE SPECIFIC PROJECTS SHALL BE PREPARED BY A PROFESSIONAL ENGINEER OR ARCHITECT WHICH WILL BECOME THE ENGINEER OF RECORD (E.O.R.) FOR THE PROJECT AND WHO WILL BE RESPONSIBLE FOR THE PROPER USE OF THE P.E.D. ENGINEER OF RECORD, ACTING AS A DELEGATED ENGINEER TO THE P.E.D. ENGINEER, SHALL SUBMIT TO THIS LATTER THE SITE SPECIFIC DRAWINGS FOR REVIEW.

    (e) ORIGINAL P.E.D. SHALL BEAR THE DATE AND ORIGINAL SEAL AND SIGNATURE OF THE PROFESSIONAL ENGINEER OF RECORD THAT PREPARED IT.

15. PRODUCT MANUFACTURE'S LABEL SHALL BE LOCATED ON A READILY VISIBLE LOCATION AT PRODUCT IN ACCORDANCE WITH TEXAS DEPARTMENT OF INSURANCE REQUIREMENTS. ONE LABEL SHALL BE PLACED FOR EVERY OPENING.

INDEX:

SHEET 1: GENERAL NOTES, INDEX AND INSTRUCTIONS.
SHEET 2: RELIANCE STORMMAX IMPACT RESISTANT SSG CURTAIN WALL SYSTEM COMPONENTS.
SHEET 3: RELIANCE STORMMAX IMPACT RESISTANT SSG CURTAIN WALL SYSTEM COMPONENTS (CONTINUED).
SHEET 4: BILL OF MATERIALS.
SHEET 5: BILL OF MATERIALS (CONTINUED).
SHEET 6: ISOMETRIC ELEVATION FOR RELIANCE STORMMAX IMPACT RESISTANT SSG CURTAIN WALL SYSTEM.
SHEET 7: TYPICAL GLAZING DETAILS.
SHEET 8: MAX. FRAME WIDTH "b" & FRAME LENGTH "a" VERSUS DESIGN PRESSURE RATING (p.s.f.) SCHEDULE.
SHEET 9: DEFINITIONS OF MULLION SECTIONS FOR SINGLE SPAN
SHEET 9A: MAX. DESIGN PRESSURE RATING FOR STD, DOOR JAMB, CORNER & JAMB MULLIONS FOR SINGLE SPAN
SHEET 10: DEFINITONS OF MULLION SECTIONS FOR TWIN SPAN
SHEET 10A:MAX. DESIGN PRESSURE RATING FOR STD, JAMB, DOOR JAMB AND CORNER MULLIONS FOR TWIN SPAN
SHEET 11: OPTIONS FOR JAMB, STANDARD AND CORNER MULLIONS SPLICED TWIN SPAN CURTAIN WALL SYSTEM
SHEET 11A: OPTIONS FOR JAMB, STANDARD AND CORNER MULLIONS CONTINUOUS TWIN SPAN CURTAIN WALL SYSTEM
SHEET 12: MAX. DESIGN PRESSURE RATING FOR SINGLE & TWIN SPAN STANDARD OR CORNER MULLIONS CONNECTION
SHEET 13: MAX. DESIGN PRESSURE RATING FOR SINGLE & TWIN SPAN JAMB OR DOOR JAMB MULLIONS CONNECTION
SHEET 14: HEAD CONNECTION DETAILS (SIDE VIEWS).
SHEET 15: HORIZONTAL (NON EXPANSION) CONNECTION DETAILS FOR INSULATED GLASS (SIDE VIEWS)
SHEET 16: HORIZONTAL (NON EXPANSION) CONNECTION DETAIL FOR INSULATED GLASS (SIDE VIEW)
SHEET 17: EXPANSION HORIZONTAL CONNECTION DETAILS (SIDE VIEWS)
SHEET 18: SILL CONNECTION DETAILS (SIDE VIEWS).
SHEET 19: SILL/HEAD CONNECTION DETAILS FOR STANDARD MULLION AT SINGLE & TWIN SPAN (PLAN).
SHEET 20: SILL/HEAD CONNECTION DETAILS FOR JAMB MULLION AT SINGLE & TWIN SPAN (PLAN).
SHEET 21: SILL/HEAD CONNECTION DETAILS FOR CORNER MULLION AT SINGLE & TWIN SPAN (PLAN).
SHEET 22: HORIZONTAL SECTIONS AT STANDARD MULLIONS (PLAN).
SHEET 23: HORIZONTAL SECTIONS AT JAMB MULLIONS (PLAN).
SHEET 24: HORIZONTAL SECTION AT CORNER MULLION (PLAN).
SHEET 25: HORIZONTAL SECTION AT INSIDE CORNER JAMB MULLION (PLAN).
SHEET 26: APPLICABILITY OF REQUIRED ANCHORS & FASTENERS FOR MULLION TYPE & SUBSTRATE
SHEET 27: JAMB MULLION INTERMEDIATE SUPPORT W/ DEAD & WIND LOAD ANCHOR AT TWIN SPAN
SHEET 28: STANDARD MULLION INTERMEDIATE SUPPORT W/ DEAD & WIND LOAD ANCHOR AT TWIN SPAN
SHEET 29: CORNER MULLION INTERMEDIATE SUPPORT W/ DEAD & WIND LOAD ANCHOR AT TWIN SPAN
SHEET 30: CORNER MULLION INTERMEDIATE SUPPORT W/ DEAD & WIND LOAD ANCHOR AT TWIN SPAN
SHEET 31: JAMB & STANDARD MULLION SPLICES AT TWIN SPAN (PLAN).
SHEET 32: JAMB & STANDARD MULLION SPLICES AT TWIN SPAN (SECTION).
SHEET 33: CORNER MULLION SPLICE DETAIL AT TWIN SPAN (PLAN).
SHEET 34: CORNER MULLION SPLICE DETAIL AT TWIN SPAN (SECTION).
SHEET 35: DOOR HEADER CONNECTION TO CURTAIN WALL HORIZONTALS.
SHEET 36: DOOR JAMBS CONNECTION TO CURTAIN WALL.
SHEET 37: SILL CONNECTION FOR JAMB MULLION & DOOR JAMB MULLION FOR DOORS INSTALLED AT EXISTING STRUCTURE OR ADJACENT TO CURTAIN WALL
SHEET 38: SILL CONNECTION FOR JAMB MULLION & DOOR JAMB MULLION FOR DOORS INSTALLED AT EXISTING STRUCTURE OR ADJACENT TO CURTAIN WALL
SHEET 39: ZONE PLUG INSTALLATION.
SHEET 40: PRESSURE PLATE AND FACE CAP INSTALLATION.

INSTRUCTIONS:

STEP 1: DETERMINE DESIGN WIND LOAD REQUIREMENTS BASED ON WIND VELOCITY, BUILDING HEIGHT, RISK CATEGORY BUILDING, WIND ZONE, USING APPLICABLE ASCE 7 STANDARD.

STEP 2: GO TO SCHEDULE ON SHEET 8 TO DETERMINE MAXIMUM DESIGN PRESSURE RATING "W" (psf) OF DESIRED GLASS SIZE BASED ON GLASS PANEL DIMENSIONS.

STEP 3: DETERMINE MAXIMUM MULLION AND JAMB SPAN "L"(FT) FOR A GIVEN MULLION EFFECTIVE SPACING "b", FOR SINGLE AND TWIN SPANS ON SCHEDULES ON SHEETS 9A AND 10A.

STEP 4: USING SCHEDULES ON SHEETS 12 AND 13 SELECT ANCHOR OPTION FOR MULLIONS AND JAMBS WITH DESIGN PRESSURE RATING EQUAL OR GREATER THAN DESIGN LOAD SPECIFIED IN STEP 1.

STEP 5: THE LOWEST VALUE OF DESIGN PRESSURE RATING RESULTING FROM STEPS 2, 3, AND 4 SHALL APPLY TO THE ENTIRE SYSTEM.

THIS DRAWING SHALL ONLY BE USED TO OBTAIN PERMITS UNDER THE TEXAS DEPARTMENT OF INSURANCE JURISDICTION

TEXAS DEPARTMENT OF INSURANCE – 2006
RELIANCE STORMMAX SSG CURTAIN WALL SYSTEM LARGE MISSILE IMPACT INSULATED LAMINATED GLASS

DRAWN BY: F.R.L 10/16/14 | DATE | 14–079 DRAWING No | SHEET 1 OF 40

Oldcastle BuildingEnvelope®
803 AIRPORT RD. TERRELL TX 75160
www.OldcastleBE.com-Phone 800-869-4567

MFR. No.	DESCRIPTION	DATE

WALTER A. TILLIT Jr P.E.
PROFESSIONAL ENGINEER
6355 N.W 36 STREET, STE. 305
VIRGINIA GARDENS, FL 33166
PHONE(305) 871–1531 FAX (305) 871–1530
TEXAS LIC. # 90691
FIRM REGISTRATION # F–13790

1/5/16

P.E. SEAL/SIGNATURE/DATE

SSG RELIANCE STORMMAX CURTAIN WALL SYSTEM COMPONENTS

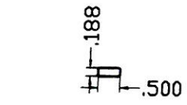

(1) CW-2101 SETTING BLOCK

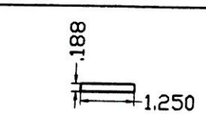

(2) CW-2102 SETTING BLOCK

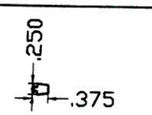

(3) FG-5185S GASKET

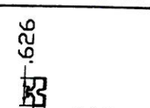

(11) GP-107 ISOLATOR

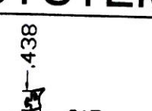

(12) GP-117 GASKET

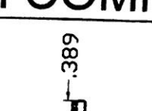

(13) GP-160 GASKET

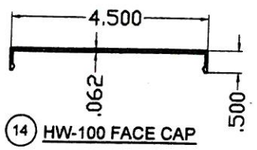

(14) HW-100 FACE CAP

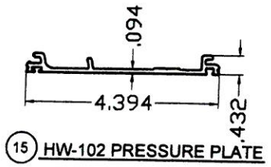

(15) HW-102 PRESSURE PLATE

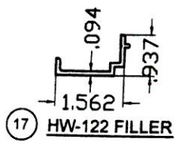

(17) HW-122 FILLER

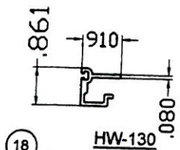

(18) HW-130 GLAZING ADAPTOR

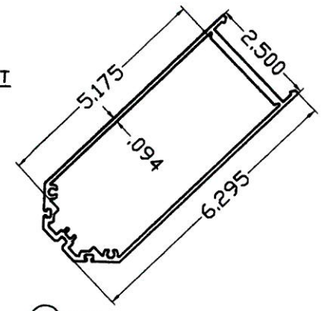

(20) HW-240 CORNER MULLION

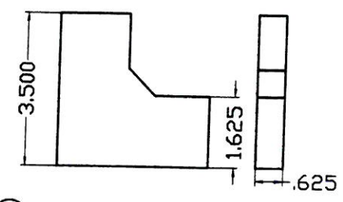

(21) HW-312 CORNER BRIDGE

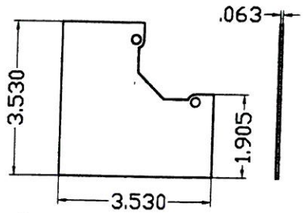

(22) HW-323 CORNER MULL CAP

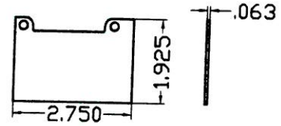

(24) HW-338 JAMB CAP

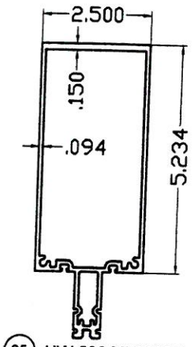

(25) HW-500 MULLION

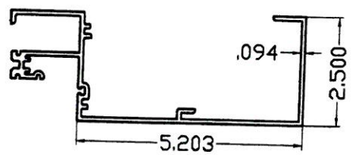

(26) HW-501 HEAD

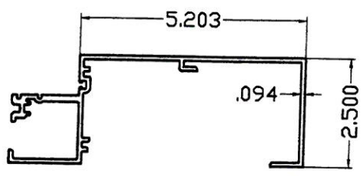

(27) HW-502 SILL

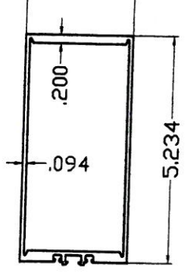

(28) HW-504 HEAVY MULLION

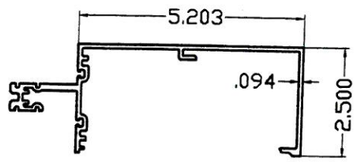

(29) HW-532 ROLL OVER HORIZONTAL

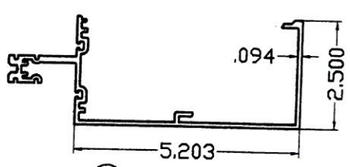

(30) HW-533 ROLL UNDER HORIZONTAL

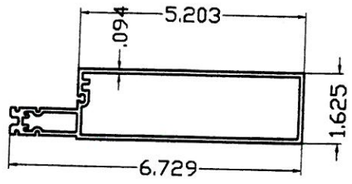

(31) HW-536 HORIZONTAL

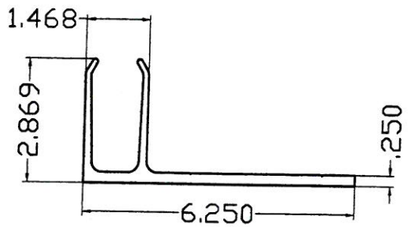

(32) HW-103-01 "F" ANCHOR (JAMB MULLION)

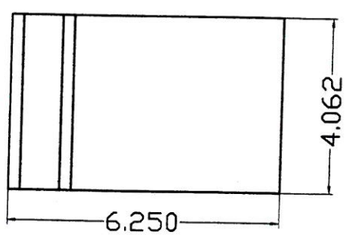

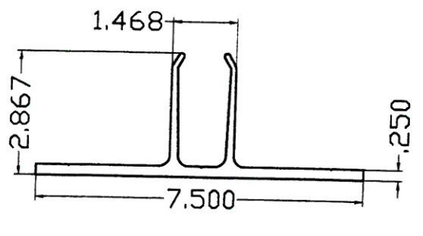

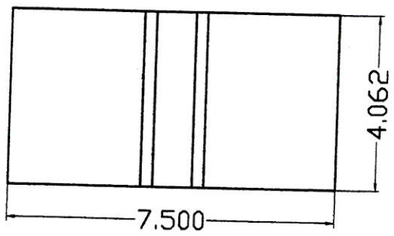

(33) HW-105-01 "T" ANCHOR (STANDARD MULLION & TOP OF DOOR JAMB MULLION)

TEXAS DEPARTMENT OF INSURANCE – 2006

RELIANCE STORMMAX SSG CURTAIN WALL SYSTEM LARGE MISSILE IMPACT INSULATED LAMINATED GLASS

DRAWN BY: F.R.L
DATE: 10/16/14
14-079 DRAWING No
SHEET 2 OF 40

Oldcastle BuildingEnvelope
803 AIRPORT RD. TERRELL TX 75160
www.OldcastleBEI.com-Phone 800-669-4567

MFR. No	DESCRIPTION	DATE	MFR. No	DESCRIPTION	DATE

WALTER A. TILLIT Jr P.E.
PROFESSIONAL ENGINEER
6355 N.W 36 STREET, STE. 305
VIRGINIA GARDENS, FL 33166
PHONE(305) 871-1531 FAX (305) 871-1530
TEXAS LIC. # 90691
FIRM REGISTRATION # F-13790

1/5/16

P.E. SEAL/SIGNATURE/DATE

SSG RELIANCE STORMMAX CURTAIN WALL SYSTEM COMPONENTS (CONTINUED)

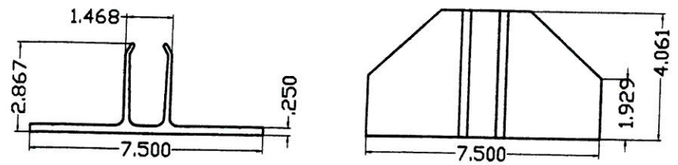

(34) HW-105-02 "T" ANCHOR (CORNER MULLION)

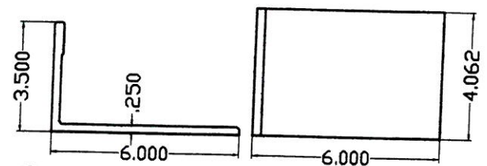

(35) HW-174-01 "L" ANCHOR (JAMB & STD MULLION)

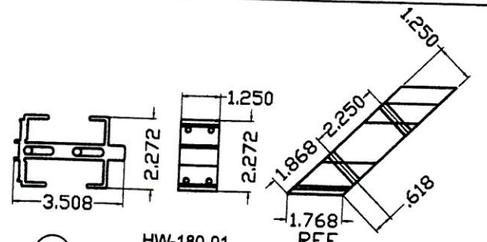

(36) HW-180-01 CORNER SHEAR BLOCK

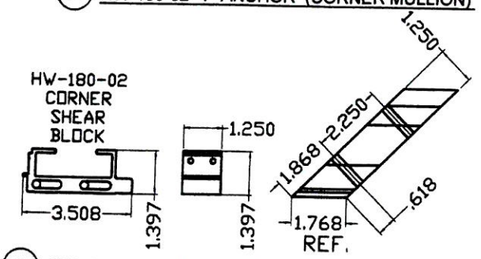

(37) HW-180-02 CORNER SHEAR BLOCK

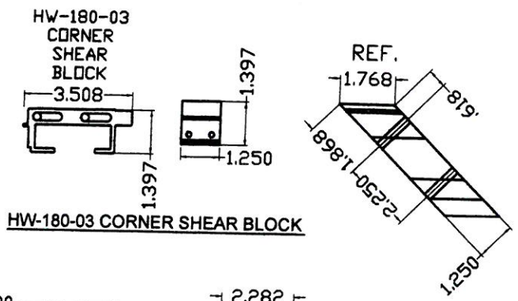

(38) HW-180-03 CORNER SHEAR BLOCK

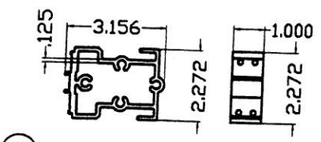

(39) HW-183-01 SHEAR BLOCK

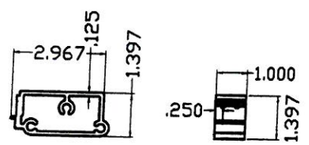

(40) HW-184-01 SHEAR BLOCK

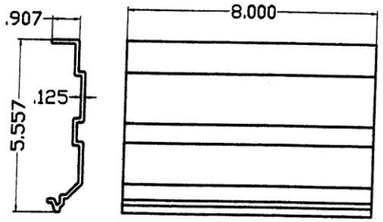

(41) HW-191-01 CORNER SPLICE

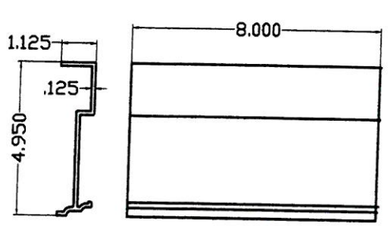

(42) HW-194-01 MULLION SPLICE

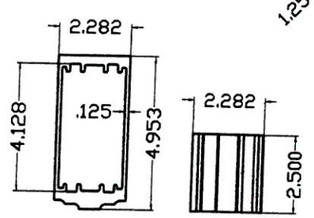

(43) HW-200-01 (FOR HW-500/HW-240) STANDARD ANCHOR SLEEVE

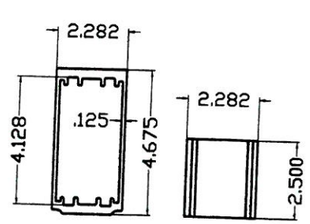

(44) HW-201-01 (FOR HW-504) HEAVY ANCHOR SLEEVE

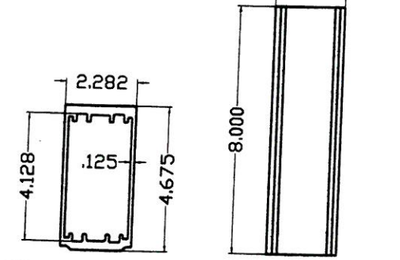

(45) HW-201-02 HEAVY MULLION HARD SPLICE

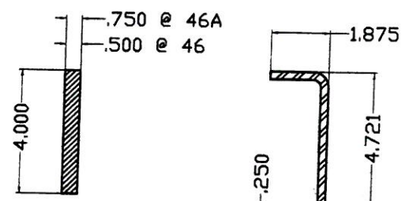

(46) (46A) RS-15 @ 46
RS-17 @ 46A
STEEL REINFORCEMENT

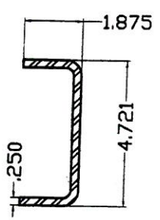

(47) RS-25 STEEL REINFORCEMENT

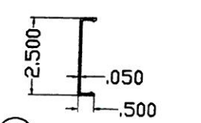

(48) WW-110 FACE CAP

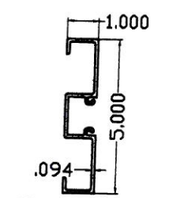

(62) DOOR JAMB/HEADER D-226

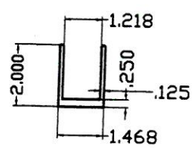

(64) F-64 TUBE

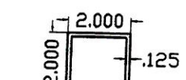

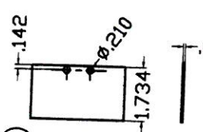

(66) HW-358 SSG MULLION CAP

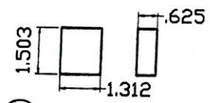

(68) HW-314 CORNER ZONE PLUG

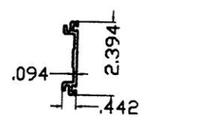

(49) WW-162 PRESSURE PLATE

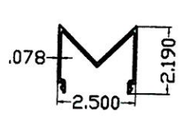

(50) WW-224 COVER

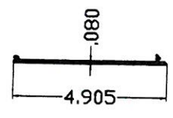

(51) WW-237 FILLER

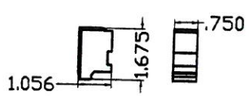

(52) WW-352 ZONE PLUG

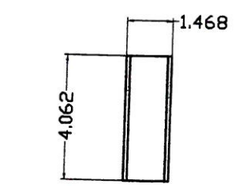

(60) HW-108-01 "U" ANCHOR

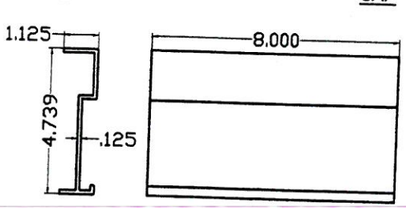

(65) HW-74-01 SSG MULLION SPLICE

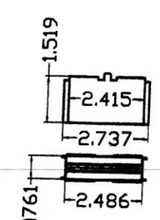

(67) WW-350 SSG BRIDGE

TEXAS DEPARTMENT OF INSURANCE – 2006
RELIANCE STORMMAX SSG CURTAIN WALL SYSTEM LARGE MISSILE IMPACT INSULATED LAMINATED GLASS

Oldcastle BuildingEnvelope®
803 AIRPORT RD. TERRELL, TX 75160
www.OldcastleBE.com-Phone 800-669-4567

DRAWN BY: F.R.L
DATE: 10/16/14
14-079
DRAWING No
SHEET 3 OF 40

WALTER A. TILLIT Jr P.E.
PROFESSIONAL ENGINEER
6355 N.W 36 STREET, STE. 305
VIRGINIA GARDENS, FL 33166
PHONE(305) 871-1531 FAX (305) 871-1530
TEXAS LIC. # 90691
FIRM REGISTRATION # F-13790

P.E. SEAL/SIGNATURE/DATE

1/5/16

BILL OF MATERIALS

ITEM No.	PART NUMBER	DESCRIPTION	DIMENSIONS	MATERIAL	MANUFACTURER	NOTES
1.	CW-2101	SETTING BLOCK	.50 X .188 X 4.00	EPDM 80 DUROMETER	EPG	
2.	CW-2102	SETTING BLOCK	1.250 X .188 X 4.00	EPDM 80 DUROMETER	EPG	
3.	FG-5185S	INTERIOR SPACER GASKET	.375 X .25	SILICONE 70 DURO	EPG	
4.	FS-7	HORIZ. TO SHEAR BLOCK FASTENER	#10 x 3/4" PFH	ZINC COATED STEEL	VARIES	MIN. Fu=124 ksi & Fy=92 ksi
5.	FS-9	SHEAR BLOCK ASSEMBLY SCREW	#14 x 1-1/2" HH	ZINC COATED STEEL	VARIES	MIN. Fu=124 ksi & Fy=92 ksi
6.	FS-259	JAMB TAP PLATE FASTENER	1/4-20 X 1" PFH TYPE F	ZINC COATED STEEL	VARIES	MIN. Fu=124 ksi & Fy=92 ksi
7.	FS-320	END CAP ATTACHMENT FASTENER	#10 x 1/2" U-DRIVE	ZINC COATED STEEL	VARIES	MIN. Fu=124 ksi & Fy=92 ksi
8.	FS-322	POCKET FILLER ATTACHMENT	#12-14 x 1" HH	ZINC COATED STEEL	VARIES	MIN. Fu=124 ksi & Fy=92 ksi
9.	FS-325	PRESSURE PLATE SCREW	#12-14 x 1-1/2" HH	STALGARD STEEL	ELCO	
10.	FS-328	ADAPTOR ATTACHEMENT SCREW	#10 X 1-1/2" PFH	ZINC COATED STEEL	VARIES	
11.	GP-107	ISOLATOR GASKET	.264 X .626	EPDM 70 DUROMETER	EPG	
12.	GP-117	EXTERIOR GASKET	.217 X .438	EPDM 60 DUROMETER	EPG	
13.	GP-160	EXTERIOR GASKET AT EXP. HORIZONTAL	.195 X .380	EPDM 60 DUROMETER	TREMCO	
14.	HW-100	FACE CAP	4.50 X .50 X .062	6063-T5 ALUMINUM	OBE	
15.	HW-102	PRESSURE PLATE	4.394 X .432 X .094	6063-T6 ALUMINUM	OBE	
17.	HW-122	POCKET FILLER	1.562 X .937 X .094	6063-T5 ALUMINUM	OBE	
18.	HW-130	GLAZING ADAPTOR	.861 X .910 X .080	6063-T5 ALUMINUM	OBE	
20.	HW-240	CORNER MULLION	6.295 X 2.50 X .094	6063-T6 ALUMINUM	OBE	
21.	HW-312	CORNER BRIDGE	3.50 X 1.625 X .625	EPDM SPONGE 55 SHRE	EPG	
22.	HW-323	CORNER MULL CAP	3.00 X 1.925 X .063	5005-H32 ALUMINUM	OBE	
24.	HW-338	JAMB CAP	2.75 X 1.925 X .063	5005-H32 ALUMINUM	OBE	
25.	HW-500	MULLION	2.50 X 5.00 X .094	6063-T6 ALUMINUM	OBE	
26.	HW-501	HEAD	2.50 X 5.203 X .094	6063-T6 ALUMINUM	OBE	
27.	HW-502	SILL	2.50 X 5.203 X .094	6063-T6 ALUMINUM	OBE	
28.	HW-504	HEAVY MULLION	2.50 X 5.234 X .250	6063-T6 ALUMINUM	OBE	
29.	HW-532	ROLL OVER HORIZONTAL	2.50 X 5.203 X .094	6063-T6 ALUMINUM	OBE	
30.	HW-533	ROLL UNDER HORIZONTAL	2.50 X 5.203 X .094	6063-T6 ALUMINUM	OBE	
31.	HW-536	EXPANSION HORIZONTAL	1.625 X 6.729 X .094	6063-T6 ALUMINUM	OBE	
32.	HW-103-01	"F" ANCHOR (JAMB MULLION)	6.250 X 2.869 X .25 X 4.062	6063-T6 ALUMINUM	OBE	USE TOP & BOTT.
33.	HW-105-01	"T" ANCHOR (STD & DOOR JAMB MULLION)	7.50 X 2.869 X .25 X 4.062	6063-T6 ALUMINUM	OBE	TOP & BOTT. AT STD MULLION TOP AT DOOR JAMB MULLION
34.	HW-105-02	"T" ANCHOR (CORNER MULLION)	7.50 X 2.869 X .25 X 4.061	6063-T6 ALUMINUM	OBE	SEE DETAIL
35.	HW-174-01	"L" ANCHOR (STANDARD & JAMB MULLION)	3.50 X 6.0 X .25 X 4.062	6063-T6 ALUMINUM	OBE	USE TOP & BOTT.
36.	HW-180-01	SHEAR BLOCK	3.508 X 2.272 X .50	6063-T6 ALUMINUM	OBE	
37.	HW-180-02	SHEAR BLOCK	3.508 X 2.272 X .50	6063-T6 ALUMINUM		

TEXAS DEPARTMENT OF INSURANCE - 2006

RELIANCE STORMMAX SSG CURTAIN WALL SYSTEM LARGE MISSILE IMPACT INSULATED LAMINATED GLASS

DRAWN BY: F.R.L 10/16/14

DATE

14-079 DRAWING No

SHEET 4 OF 40

Oldcastle BuildingEnvelope®
803 AIRPORT RD. TERRELL, TX. 75160
www.OldcastleBE.com-Phone 800-869-4567

REV. No	DESCRIPTION	BY	DATE

WALTER A. TILLIT Jr P.E.
PROFESSIONAL ENGINEER
6355 N.W 36 STREET, STE. 305
VIRGINIA GARDENS, FL 33166
PHONE(305) 871-1531 FAX (305) 871-1530
TEXAS LIC. # 90691
FIRM REGISTRATION # F-13790

P.E. SEAL/SIGNATURE/DATE

1/6/14

BILL OF MATERIALS (CONTINUED)

ITEM No.	PART NUMBER	DESCRIPTION	DIMENSIONS	MATERIAL	MANUFACTURER	NOTES
38.	HW-180-03	SHEAR BLOCK	3.508 X 2.272 X .50	6063-T6 ALUMINUM	OBE	
39.	HW-183-01	SHEAR BLOCK	2.827 X 2.272 X .125	6063-T6 ALUMINUM	OBE	
40.	HW-184-01	SHEAR BLOCK	3.153 X 1.397 X .125	6063-T6 ALUMINUM	OBE	
41.	HW-191-01	CORNER SPLICE	5.557 X 1.125 X 8.00 X.126	6063-T6 ALUMINUM	OBE	
42.	HW-194-01	JAMB & STANDARD MULLION SPLICE	4.950 X 1.125 X 8.00 X.125	6063-T6 ALUMINUM	OBE	
43.	HW-200-01	STANDARD MULL ANCHOR SLEEVE	2.282 X 4.953 X 2.50 X .125	6063-T6 ALUMINUM	OBE	
44.	HW-201-01	HEAVY MULL ANCHOR SLEEVE	2.282 X 4.675 X 2.50 X .125	6063-T6 ALUMINUM	OBE	
45.	HW-201-02	HEAVY MULL SPLICE	2.282 X 4.675 X 8.00 X .125	6063-T6 ALUMINUM	OBE	
46.	RS-15	REINFORCEMENT STEEL	.50 X 4.00	ASTM A-36	OBE	ZINC PAINTED STEEL
46A	RS-17	REINFORCEMENT STEEL	.75 X 4.00	ASTM A-36	OBE	ZINC PAINTED STEEL
47.	RS-25	REINFORCEMENT STEEL	1.875 X 4.721 X .25	ASTM A-36	OBE	ZINC PAINTED STEEL
48.	WW-110	FACE CAP	.50 X 2.50 X .050	6063-T5 ALUMINUM	OBE	
49.	WW-162	PRESSURE PLATE	.442 X 2.394 X .094	6063-T6 ALUMINUM	OBE	
50.	WW-224	COVER	2.50 X 2.190 X .078	6063-T5 ALUMINUM	OBE	
51.	WW-237	FILLER	.204 X 4.905 X .080	6063-T5 ALUMINUM	OBE	
52.	WW-352	ZONE PLUG	1.056 X 1.675 x .75	ABS PLASTIC	CHARLOMA	
53.	795	PERIMETER SEAL		SILICONE	DOW CORNING	
54.	SCS 2000	PERIMETER SEAL		SILICONE	GE	
55.	995	POCKET SEAL		SILICONE	DOW CORNING	
56.	SSG 4600	POCKET SEAL		SILICONE	GE	
57.	FASTENERS	MID POINT ANCHOR AT MULLIONS	5/8-18 X 4 1/2 HH	GRADE 5 ZINC PLATED	VARIES	
58.	FASTENERS	MID POINT ANCHOR AT MULLIONS	5/8-18 X NUTS	GRADE 5 ZINC PLATED	VARIES	
59.	FASTENERS	MID POINT ANCHOR AT JAMBS	5/8-18 X 1 3/4 HH FN THREAD	GRADE 5 ZINC PLATED	VARIES	
60.	HW -108-01 "U" ANCHOR	AT DOOR JAMB MULLION & AT JAMB MULLION AT DOOR W/ NON SIDELITE & OPTIONAL AT JAMB MULLION	2.875 X 1.468 X 0.25 X 4.062	6063-T6 ALUMINUM	OBE	USE ONLY AT BOTT.
62.	D-226	DOOR JAMB/HEADER	1.00 X 5.00 X .094	6063-T6 ALUMINUM	OBE	
64.	F-64	TUBE	2.00 X 2.00 X .125	6063-T5 ALUMINUM	OBE	
65.	HW-74-01	SSG MULLION SPLICE	4.739 X 1.125 X 8.00 X.125	6063-T6 ALUMINUM	OBE	
66.	HW-358	SSG MULLION CAP	3.00 X 1.735 X .063	5005 H32 ALUMINUM	OBE	
67.	WW-350	SSG BRIDGE	2.737 X 1.519 X .761	ABS PLASTIC	CHARLOMA	
68.	HW-314	CORNER ZONE PLUG	1.312 X 1.503 X .625	EPDM SPONGE 55 SHRE	EPG	
69.	INSULATING GLASS UNIT SPACER	MODEL H 6.5	1/2" WIDE X 1/4" HIGH x 0.014" THK.	3105-H24 ALUM. ALLOY	PROFILGLASS	

TEXAS DEPARTMENT OF INSURANCE - 2006

RELIANCE STORMMAX SSG CURTAIN
WALL SYSTEM LARGE MISSILE IMPACT
INSULATED LAMINATED GLASS

Oldcastle BuildingEnvelope
803 AIRPORT RD. TERRELL TX 75160
www.OldcastleBE.com-Phone 800-869-4567

DRAWN BY: F.R.L 10/16/14
DATE
14-079
DRAWING No
SHEET 5 OF 40

WALTER A. TILLIT Jr P.E.
PROFESSIONAL ENGINEER
6355 N.W 36 STREET, STE. 305
VIRGINIA GARDENS, FL 33166
PHONE(305) 871-1530 FAX (305) 871-1531
TEXAS LIC. # 90691
FIRM REGISTRATION # F-13790

P.E. SEAL/SIGNATURE/DATE

ISOMETRIC ELEVATION FOR RELIANCE STORMMAX IMPACT RESISTANT SSG CURTAIN WALL SYSTEM

N.T.S.

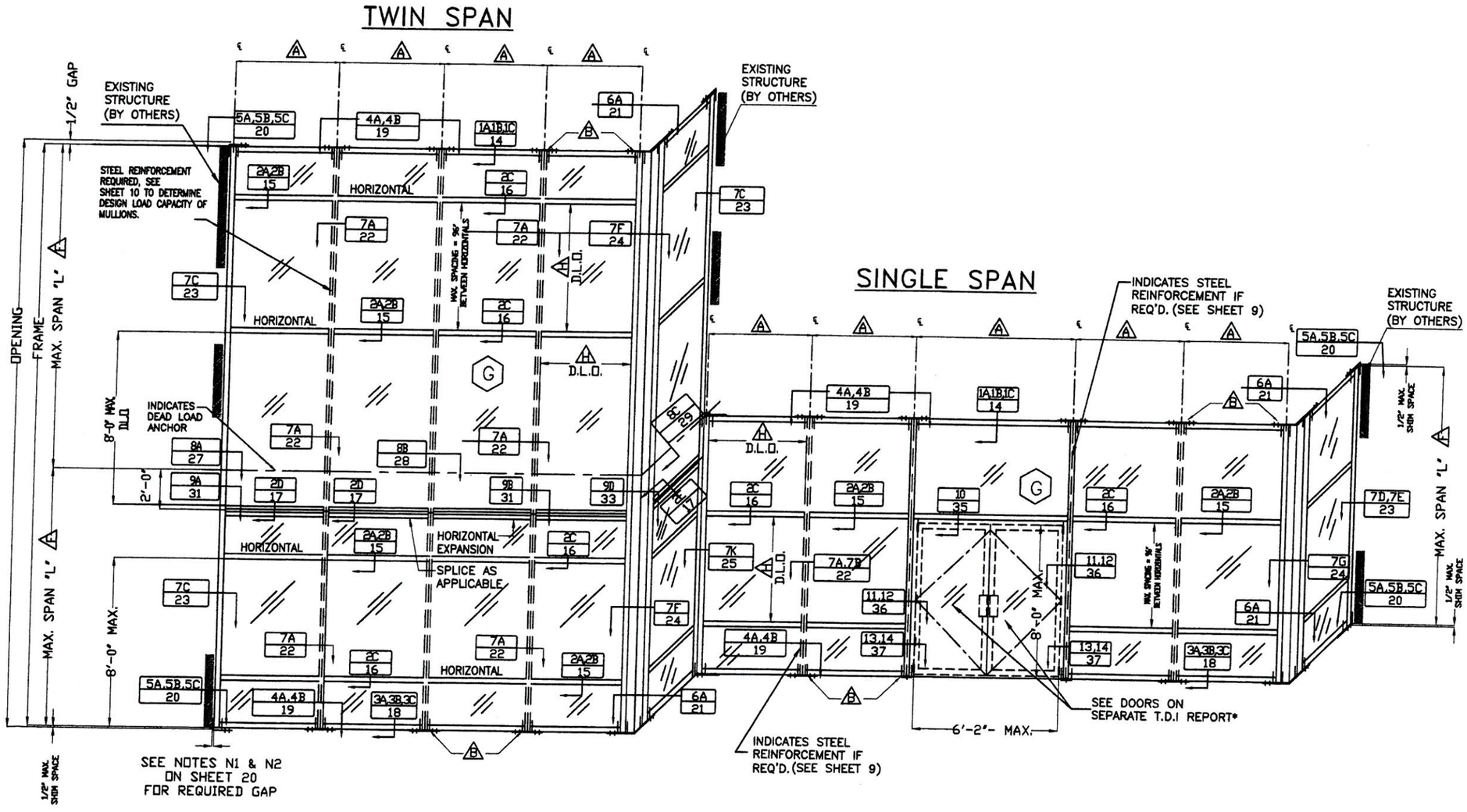

* WHEN INSTALLING A DOOR IN THIS SYSTEM, PANELS ADJACENT TO DOOR MUST BE GLAZED WITH SAFETY GLASS, PER GLASS TYPE G12.

FOOT NOTES:

- (A) FOR MULLION AND JAMB SPACING AND MAX. MULLION SPAN SEE SHEETS 9A & 10A
- (B) FOR HEAD AND SILL ANCHORS TYPES AT SINGLE & TWIN SPAN, SEE SHEET 12 & 13.
- (F) FOR MAXIMUM MULLION AND JAMB SPAN SEE SHEETS 9A & 10A.
- (G) FOR GLAZING DETAILS AND GLASS SCHEDULE SEE SHEET 7.
- (H) FOR MAXIMUM D.L.O. SEE SCHEDULE ON SHEET 8.

TEXAS DEPARTMENT OF INSURANCE – 2006
RELIANCE STORMMAX SSG CURTAIN WALL SYSTEM LARGE MISSILE IMPACT INSULATED LAMINATED GLASS

DRAWN BY: F.R.L.
DATE: 10/16/14
14-079 DRAWING No
SHEET 6 OF 40

Oldcastle BuildingEnvelope®
803 AIRPORT RD. TERRELL TX 75160
www.OldcastleBE.com-Phone 800-669-4567

WALTER A. TILLIT Jr P.E.
PROFESSIONAL ENGINEER
6355 N.W 36 STREET, STE. 305
VIRGINIA GARDENS, FL 33186
PHONE(305) 871-1530 FAX (305) 871-1531
TEXAS LIC. # 90691
FIRM REGISTRATION # F-13790

1/5/16

P.E. SEAL/SIGNATURE/DATE

INSULATED LAMINATED GLASS SCHEDULE

GLASS LABEL	GLASS COMPOSITION	MANUFACTURER NAME	MAX. D.L.O.	MISSILE TYPE
G35	1 5/16" STORMGLASS INSULATED GLASS CONSISTING OF 1/4" HS - 1/2" AIR SPACE -1/4" H.S. SAFLEX CP- SAFLEX & SAFLEX HP COMPOSITE GLASS INTERLAYERS W/ PET CORE -1/4" H.S.	EASTMAN CHEMICAL COMPANY	SEE SCHEDULE ON SHEET 8	LARGE MISSILE IMPACT
G12	1 5/16" STORMGLASS INSULATED GLASS CONSISTING OF EXTERIOR 1/4" TEMP.- 1/2" AIR SPACE -1/4" H.S. SAFLEX CP - SAFLEX & SAFLEX HP COMPOSITE GLASS INTERLAYERS - W/ PET CORE-1/4" H.S.	EASTMAN CHEMICAL COMPANY	SEE SCHEDULE ON SHEET 8	LARGE MISSILE IMPACT

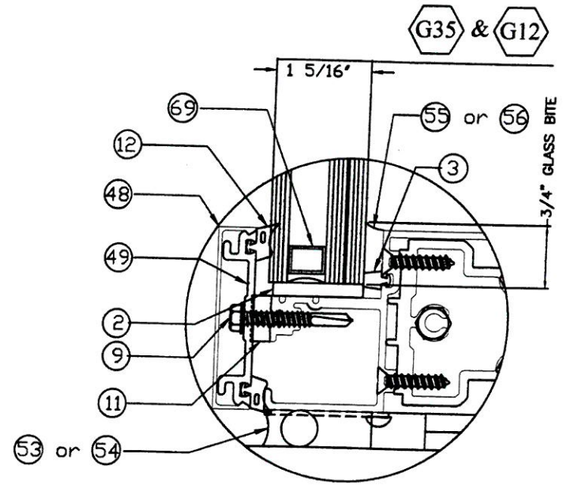

INSULATED LAMINATED GLAZING DETAIL AT HORIZONTALS, JAMBS & CORNER MULLIONS

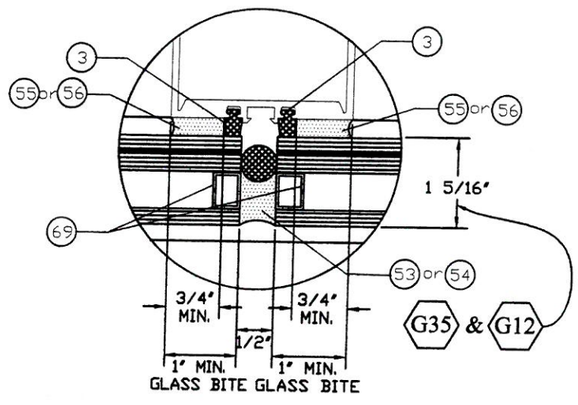

INSULATED LAMINATED GLAZING DETAIL AT STANDARD MULLIONS

TEXAS DEPARTMENT OF INSURANCE – 2006

RELIANCE STORMMAX SSG CURTAIN WALL SYSTEM LARGE MISSILE IMPACT INSULATED LAMINATED GLASS

DRAWN BY: F.R.L
DATE: 10/16/14
14-079 DRAWING No
SHEET 7 OF 40

Oldcastle BuildingEnvelope®
800 AIRPORT RD. TERRELL TX 75160
www.OldcastleBE.com-Phone 800-869-4567

REV. No	DESCRIPTION	DATE

WALTER A. TILLIT Jr P.E.
PROFESSIONAL ENGINEER
6355 N.W 36 STREET, STE. 305
VIRGINIA GARDENS, FL 33166
PHONE(305) 871-1531 FAX (305) 871-1530
TEXAS LIC. # 90691
FIRM REGISTRATION # F-13790

1/5/16

P.E. SEAL/SIGNATURE/DATE

MAXIMUM FRAME WIDTH "a" AND FRAME LENGTH "b" VERSUS DESIGN PRESSURE RATING (psf) SCHEDULE *

DIMENSIONS LEGEND **

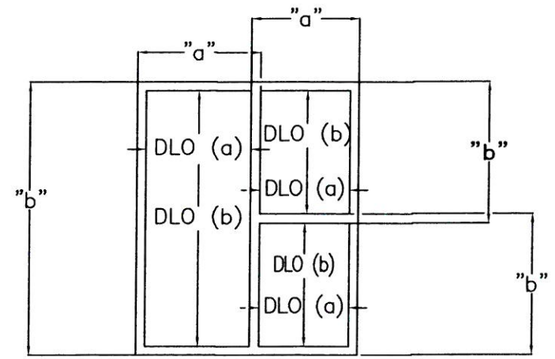

INSULATED LAMINATED GLASS (G35) (G12)		
DIMENSION "a"	DIMENSION "b"	MAX. DESIGN PRESSURE RATING (psf)
18" OR LESS *	FROM 18" TO 101"	± 90.0
24" OR LESS	FROM 24" TO 101"	± 90.0
30" OR LESS	FROM 30" TO 101"	± 90.0
36" OR LESS	FROM 36" TO 101"	± 90.0
42" OR LESS	FROM 42" TO 101"	± 90.0
48" OR LESS	FROM 48" TO 101"	± 90.0
54" OR LESS	FROM 54" TO 94"	± 84.2
57.5"OR LESS	FROM 57.5" TO 88.7"	± 79.1
60" OR LESS	FROM 60" TO 85"	± 76.8
62.5"OR LESS	FROM 62.5" TO 81.6"	± 72.7

* MIN a= 20 3/4" FOR b/a EQUAL OR GREATER THAN 5.0 @ HEAD & SILL AND MIN a= 28 5/8" FOR b/a EQUAL OR GREATER THAN 5.0 @ JAMBS & MULLIONS.

** SIDE "a" IS ALWAYS EQUAL OR SHORTER THAN SIDE "b". "a", "b" MAY BE ORIENTED IN ANY DIRECTION.

DETERMINATION OF MAXIMUM DAY LIGHT OPENING (D.L.O.) AT EACH END OF GLASS GIVEN "a" & "b"

SIDE	MAX. DAY LIGHT OPENING
	(D.L.O.) Formula
MAX. D.L.O. (a) (SHORT SIDE)	"a"–5.00"
MAX. D.L.O. (b) (LONG SIDE)	"b"–5.00"

TEXAS DEPARTMENT OF INSURANCE – 2006

RELIANCE STORMMAX SSG CURTAIN WALL SYSTEM LARGE MISSILE IMPACT INSULATED LAMINATED GLASS

DRAWN BY: F.R.L
DATE: 10/16/14
DRAWING No: 14–079
SHEET 8 OF 40

Oldcastle BuildingEnvelope®
803 AIRPORT RD. TERRELL TX 75160
www.OldcastleBE.com-Phone 800-869-4567

REV. No	DESCRIPTION	DATE
	REVISION	1/4/16

WALTER A. TILLIT Jr P.E.
PROFESSIONAL ENGINEER
6355 N.W 36 STREET, STE. 305
VIRGINIA GARDENS, FL 33166
PHONE(305) 871–1530 FAX (305) 871–1531
TEXAS LIC. # 90691
FIRM REGISTRATION # F–13790

P.E. SEAL/SIGNATURE/DATE

1/5/16

RELIANCE STORMMAX SSG SINGLE SPAN MULLION

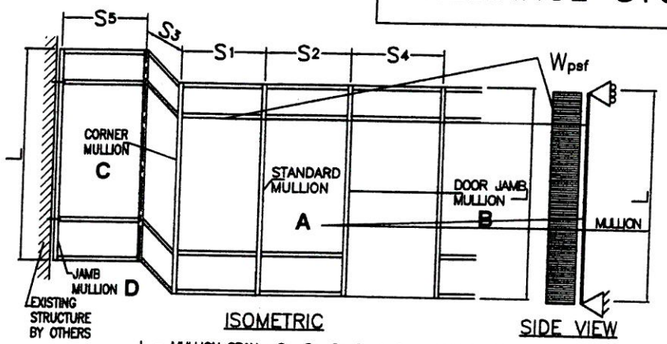

L = MULLION SPAN ; S1, S2, S3, S4 & S5 = MULLION SPACING

EFFECTIVE SPACING $b = \frac{S_1 + S_2}{2}$ (FOR STANDARD MULLION)

EFFECTIVE SPACING $b = \frac{S_1 + S_3}{2}$ (FOR CORNER MULLION)

EFFECTIVE SPACING $b = \frac{S_2 + S_4}{2}$ (FOR DOOR JAMB MULLION)

EFFECTIVE SPACING $b = \frac{S_5}{2}$ (FOR JAMB MULLION)

DEFINITIONS OF MULLION SECTIONS

SECTION 1 : SINGLE SPAN UNREINFORCED STANDARD HEAVY MULLION A OPTION 1 (SEE SECT. 7B/22)

SECTION 2 : SINGLE SPAN REINFORCED STANDARD HEAVY MULLION A OPTION 2 (SEE SECT. 7A/22)

SECTION 3 : SINGLE SPAN REINFORCED DOOR JAMB MULLION B (SEE DET. 12/36)

SECTION 4 : SINGLE SPAN REINFORCED CORNER MULLION C (SEE DET. 7F/24)

SECTION 5 : SINGLE SPAN UNREINFORCED JAMB MULLION D OPTION 1 (SEE SECT. 7D/23)

SECTION 6 : SINGLE SPAN REINFORCED JAMB MULLION D OPTION 2 (SEE SECT. 7E/23)

STANDARD MULLION OPTION 1		
A	SECTION:1 HEAVY MULLION (28)	Ix= 8.0273 in4 Sx= 3.0435 in3 IN TERMS OF ALUM.

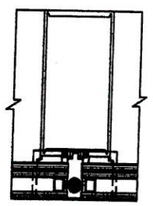

STANDARD MULLION OPTION 2		
A	SECTION:2 HEAVY MULLION (28) W/ STEEL CHANNEL (47)	Ix= 25.5382 in4 Sx= 9.8032 in3 IN TERMS OF ALUM.

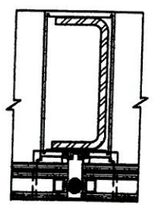

DOOR JAMB MULLION		
B	SECTION:3 LIGHT MULLION (25) W/ STEEL CHANNEL (47) & 1/2"x4" STEEL BAR (46)	Ix= 37.488 in4 Sx= 9.085 in3 IN TERMS OF ALUM.

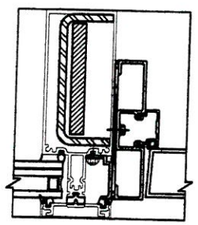

CORNER MULLION		
C	SECTION:4 CORNER MULLION (20) W/ STEEL CHANNEL (47)	Ix= 27.782 in4 Sx= 8.6737 in3 IN TERMS OF ALUM.

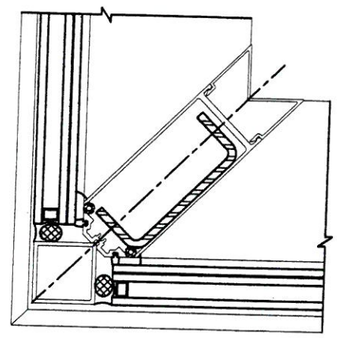

JAMB MULLION OPTION 1		
D	SECTION:5 JAMB MULLION (25)	Ix= 10.803 in4 Sx= 3.1168 in3 IN TERMS OF ALUM.

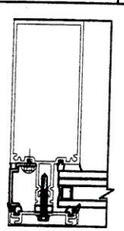

JAMB MULLION OPTION 2		
D	SECTION:6 JAMB MULLION (25) W/ STEEL BAR (46)	Ix= 19.677 in4 Sx= 4.9752 in3 IN TERMS OF ALUM.

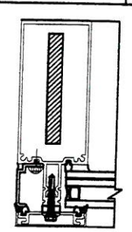

TEXAS DEPARTMENT OF INSURANCE – 2006

RELIANCE STORMMAX SSG CURTAIN WALL SYSTEM LARGE MISSILE IMPACT INSULATED LAMINATED GLASS

DRAWN BY: F.R.L 10/16/14

DATE

14-079 DRAWING No

SHEET 9 OF 40

Oldcastle BuildingEnvelope®
803 AIRPORT RD. TERRELL TX 75160
www.OldcastleBE.com-Phone 800-869-4567

WALTER A. TILLIT Jr P.E.
PROFESSIONAL ENGINEER
6335 N.W 36 STREET, STE. 305
VIRGINIA GARDENS, FL 33166
PHONE(305) 871-1531 FAX (305) 871-1530
TEXAS LIC. # 90691
FIRM REGISTRATION # F-13790

1/5/16

P.E. SEAL/SIGNATURE/DATE

MAXIMUM DESIGN PRESSURE RATING FOR STANDARD, DOOR JAMB, CORNER & JAMB MULLIONS FOR SINGLE SPAN

MAXIMUM MULLION SINGLE SPAN "L"(FT) SCHEDULE FOR A GIVEN DESIGN PRESSURE RATING (psf) AND A GIVEN MULLION EFFECTIVE SPACING "b"

MAX. DESING PRESSURE RATING	EFFECTIVE SPACING	SINGLE SPAN MULLION					
		SECTION 1 STANDARD MULLION A OPTION 1	SECTION 2 STANDARD MULLION A OPTION 2	SECTION 3 DOOR JAMB MULLION B	SECTION 4 CORNER MULLION C	SECTION 5 JAMB MULLION D OPTION 1	SECTION 6 JAMB MULLION D OPTION 2
(psf)	"b"(ft–in)	"L"(ft–in)	"L"(ft–in)	"L"(ft–in)	"L"(ft–in)	"L"(ft–in)	"L"(ft–in)
60.0	3'–0"	8'–5"	12'–0"	12'–6"	12'–0"	8'–5"	12'–0"
	3'–6"	8'–5"	12'–0"	12'–6"	12'–0"	8'–5"	12'–0"
	4'–0"	8'–5"	12'–0"	12'–6"	12'–0"	8'–5"	12'–0"
	5'–0"	—	—	12'–6"	—	—	—
65.0	3'–0"	8'–5"	12'–0"	12'–6"	12'–0"	8'–5"	12'–0"
	3'–6"	8'–5"	12'–0"	12'–6"	12'–0"	8'–5"	12'–0"
	4'–0"	8'–5"	12'–0"	12'–6"	12'–0"	8'–5"	12'–0"
	5'–0"	—	—	12'–6"	—	—	—
70.0	3'–0"	8'–5"	12'–0"	12'–6"	12'–0"	8'–5"	12'–0"
	3'–6"	8'–5"	12'–0"	12'–6"	12'–0"	8'–5"	12'–0"
	4'–0"	8'–5"	12'–0"	12'–6"	12'–0"	8'–5"	12'–0"
	5'–0"	—	—	12'–6"	—	—	—
75.0	3'–0"	—	12'–0"	12'–6"	12'–0"	—	12'–0"
	3'–6"	—	12'–0"	12'–6"	12'–0"	—	12'–0"
	4'–0"	—	11'–2"	12'–6"	11'–2"	—	11'–2"
	5'–0"	—	—	12'–6"	—	—	—
80.0	3'–0"	—	12'–0"	12'–6"	12'–0"	—	12'–0"
	3'–6"	—	12'–0"	12'–6"	12'–0"	—	12'–0"
	4'–0"	—	10'–6"	12'–6"	10'–6"	—	10'–6"
	5'–0"	—	—	12'–6"	—	—	—
85.0	3'–0"	—	12'–0"	—	12'–0"	—	12'–0"
	3'–6"	—	11'–4"	—	11'–4"	—	11'–4"
	4'–0"	—	9'–11"	—	9'–11"	—	9'–11"
90.0	3'–0"	—	12'–0"	—	12'–0"	—	12'–0"
	3'–6"	—	10'–8"	—	10'–8"	—	10'–8"
	4'–0"	—	9'–4"	—	9'–4"	—	9'–4"

TEXAS DEPARTMENT OF INSURANCE – 2006

RELIANCE STORMMAX SSG CURTAIN WALL SYSTEM LARGE MISSILE IMPACT INSULATED LAMINATED GLASS

DRAWN BY: F.R.L 10/16/14 DATE

Oldcastle BuildingEnvelope® 803 AIRPORT RD. TERRELL TX 75160 www.OldcastleBE.com-Phone 800-869-4567

14–079 DRAWING No

SHEET 34 OF 40

REV. No	DESCRIPTION	DATE

WALTER A. TILLIT Jr P.E.
PROFESSIONAL ENGINEER
6355 N.W 36 STREET, STE. 305
VIRGINIA GARDENS, FL 33166
PHONE(305) 871–1530 FAX (305) 871–1531
TEXAS LIC. # 90691
FIRM REGISTRATION # F–13790

1/5/16

P.E. SEAL/SIGNATURE/DATE

RELIANCE STORMMAX SSG TWIN SPAN MULLION W/ & W/O SPLICE

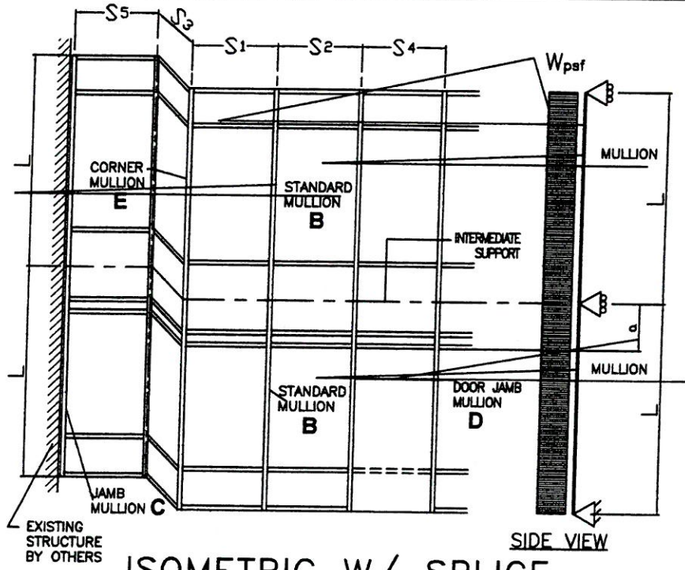

ISOMETRIC W/ SPLICE

L = MULLION SPAN ; S1, S2, S3, S4 & S5 = MULLION SPACING

EFFECTIVE SPACING $b = \frac{S_1 + S_2}{2}$ (FOR STANDARD MULLION)

EFFECTIVE SPACING $b = \frac{S_1 + S_3}{2}$ (FOR CORNER MULLION)

EFFECTIVE SPACING $b = \frac{S_2 + S_4}{2}$ (FOR DOOR JAMB MULLION)

EFFECTIVE SPACING $b = \frac{S_5}{2}$ (FOR JAMB MULLION)

SPLICE LOCATION a=25" MAX. DOWNWARD OVERHANG FROM INTERMEDIATE SUPPORT

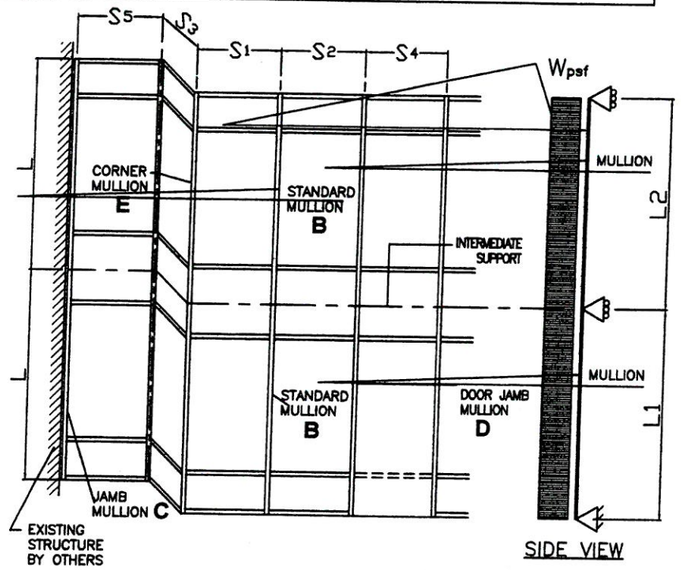

ISOMETRIC W/O SPLICE

L1 = MULLION SPAN FIRST BAY
L2 = MULLION SPAN SECOND BAY

STANDARD HEAVY MULLION		
A	SECTION:1 HEAVY MULLION (28) W/ STEEL CHANNEL (47)	Ix= 25.5382 in4 Sx= 9.7144 in3 IN TERMS OF ALUM.

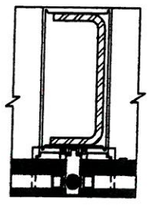

DOOR JAMB MULLION		
B	SECTION:2 LIGHT MULLION (25) W/ STEEL CHANNEL (47) & 1/2"x4" STEEL BAR (46)	Ix= 37.488 in4 Sx= 9.085 in3 IN TERMS OF ALUM.

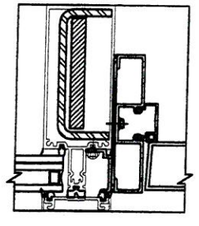

CORNER MULLION		
C	SECTION:3 CORNER MULLION (20) W/ STEEL CHANNEL (47)	Ix= 27.782 in4 Sx= 8.6737 in3 IN TERMS OF ALUM.

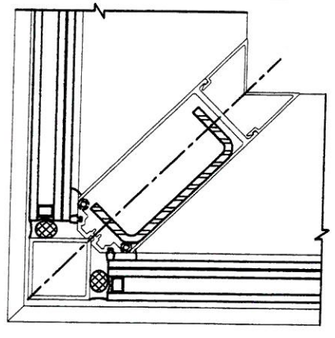

JAMB MULLION		
D	SECTION:4 JAMB MULLION (25) W/ STEEL CHANNEL (47)	Ix= 29.217 in4 Sx= 7.2769 in3 IN TERMS OF ALUM.

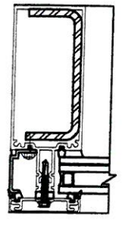

DEFINITIONS OF MULLION SECTIONS

SECTION 1 : TWIN SPAN REINFORCED STANDARD HEAVY MULLION (SEE SECT. 7A/22)	A
SECTION 2 : TWIN SPAN REINFORCED DOOR JAMB MULLION (SEE DET. 12/36)	B
SECTION 3 : TWIN SPAN REINFORCED CORNER MULLION OPTION 1 (SEE DET. 7F/24)	C
SECTION 4 : TWIN SPAN LIGHT REINFORCED JAMB MULLION (SEE SECT. 7C/23)	D

TEXAS DEPARTMENT OF INSURANCE - 2006

RELIANCE STORMMAX SSG CURTAIN WALL SYSTEM LARGE MISSILE IMPACT INSULATED LAMINATED GLASS

DRAWN BY: F.R.L
DATE: 10/16/14
DRAWING No: 14-079
SHEET 10 OF 40

Oldcastle BuildingEnvelope®
803 AIRPORT RD. TERRELL TX 75160
www.OldcastleBE.com-Phone 800-869-4567

REV. No.	DESCRIPTION	DATE	APP. No.	DESCRIPTION	DATE

WALTER A. TILLIT Jr P.E.
PROFESSIONAL ENGINEER
6355 N.W 36 STREET, STE. 305
VIRGINIA GARDENS, FL 33166
PHONE(305) 871-1530 FAX (305) 871-1531
TEXAS LIC. # 90691
FIRM REGISTRATION # F-13790

1/5/16

P.E. SEAL/SIGNATURE/DATE

MAXIMUM DESIGN PRESSURE RATING FOR STANDARD, JAMB, DOOR JAMB & CORNER MULLIONS FOR TWIN SPAN W/ & W/O SPLICED MULLIONS

MAXIMUM MULLION TWIN SPAN "L"(FT) SCHEDULE FOR A GIVEN DESIGN PRESSURE RATING (psf) AND A GIVEN MULLION EFFECTIVE SPACING "b"

MAX. DESING PRESSURE RATING	EFFECTIVE SPACING	TWIN SPAN MULLION W/ SPLICE			
		SECTION 1 STANDARD MULLION A	SECTION 2 DOOR JAMB MULLION B	SECTION 3 CORNER MULLION C	SECTION 4 JAMB MULLION D
(psf)	"b"(ft–in)	"L"(ft–in)	"L"(ft–in)	"L"(ft–in)	"L"(ft–in)
60.0	3'–0"	12'–6"	12'–6"	12'–6"	12'–6"
	3'–6"	12'–6"	12'–6"	12'–6"	12'–6"
	4'–0"	12'–6"	12'–6"	12'–6"	12'–6"
	5'–0"	—	12'–6"	—	—
65.0	3'–0"	12'–6"	12'–6"	12'–6"	12'–6"
	3'–6"	12'–6"	12'–6"	12'–6"	12'–6"
	4'–0"	12'–6"	12'–6"	12'–6"	12'–6"
	5'–0"	—	12'–6"	—	—
70.0	3'–0"	12'–6"	12'–6"	12'–6"	12'–6"
	3'–6"	12'–6"	12'–6"	12'–6"	12'–6"
	4'–0"	12'–6"	12'–6"	12'–6"	12'–6"
	5'–0"	—	12'–6"	—	—
75.0	3'–0"	12'–6"	12'–6"	12'–6"	12'–6"
	3'–6"	12'–6"	12'–6"	12'–6"	12'–6"
	4'–0"	12'–6"	12'–6"	12'–6"	12'–6"
	5'–0"	—	12'–6"	—	—
80.0	3'–0"	12'–6"	12'–6"	12'–6"	12'–6"
	3'–6"	12'–6"	12'–6"	12'–6"	12'–6"
	4'–0"	12'–6"	12'–6"	12'–6"	12'–6"
	5'–0"	—	12'–6"	—	—
85.0	3'–0"	12'–6"	—	12'–6"	12'–6"
	3'–6"	12'–6"	—	12'–6"	12'–6"
	4'–0"	12'–6"	—	12'–6"	12'–6"
90.0	3'–0"	12'–6"	—	12'–6"	12'–6"
	3'–6"	12'–6"	—	12'–6"	12'–6"
	4'–0"	12'–6"	—	12'–6"	12'–6"

TEXAS DEPARTMENT OF INSURANCE – 2006

RELIANCE STORMMAX SSG CURTAIN WALL SYSTEM LARGE MISSILE IMPACT INSULATED LAMINATED GLASS

DRAWN BY: F.R.L

DATE 10/16/14

DRAWING No 14–079

SHEET 10A OF 40

Oldcastle BuildingEnvelope®
803 AIRPORT RD. TERRELL TX 75160
www.OldcastleBE.com Phone 800-869-4567

DESCRIPTION	DATE	REV. No

WALTER A. TILLIT Jr P.E.
PROFESSIONAL ENGINEER
6355 N.W 36 STREET, STE. 305
VIRGINIA GARDENS, FL 33166
PHONE(305) 871–1530 FAX (305) 871–1531
TEXAS LIC. # 90691
FIRM REGISTRATION # F–13790

1/5/16

P.E. SEAL/SIGNATURE/DATE

OPTIONS FOR JAMB, CORNER AND STANDARD MULLIONS INSTALLATION FOR TWIN SPAN CURTAIN WALL SYSTEM W/ SPLICED MULLIONS

N.T.S.

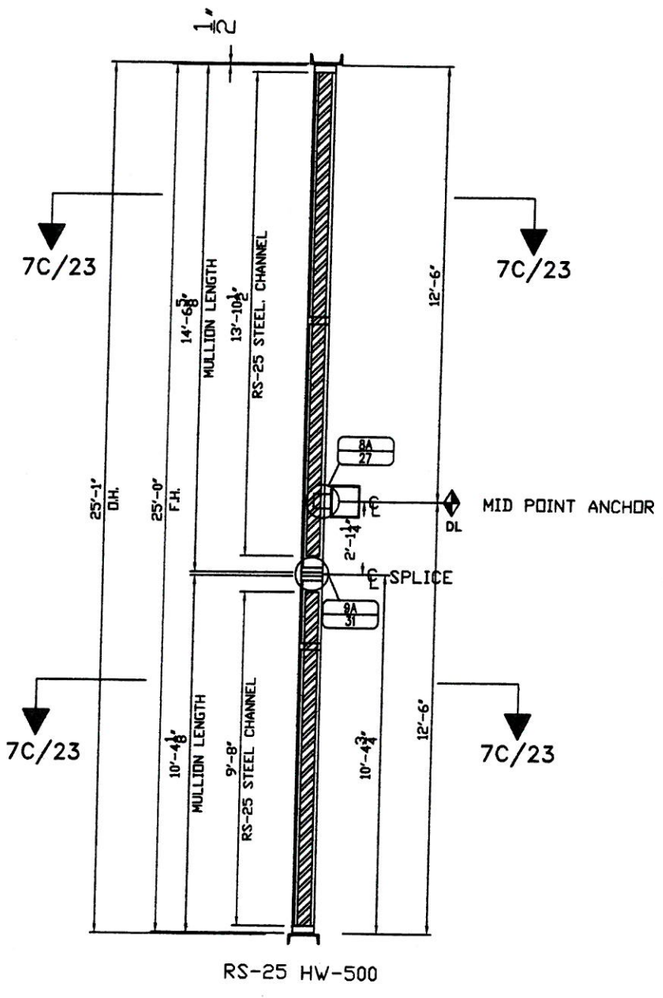

RS-25 HW-500

SIDEVIEW FOR JAMB MULLION
(SEE SHEET 10)

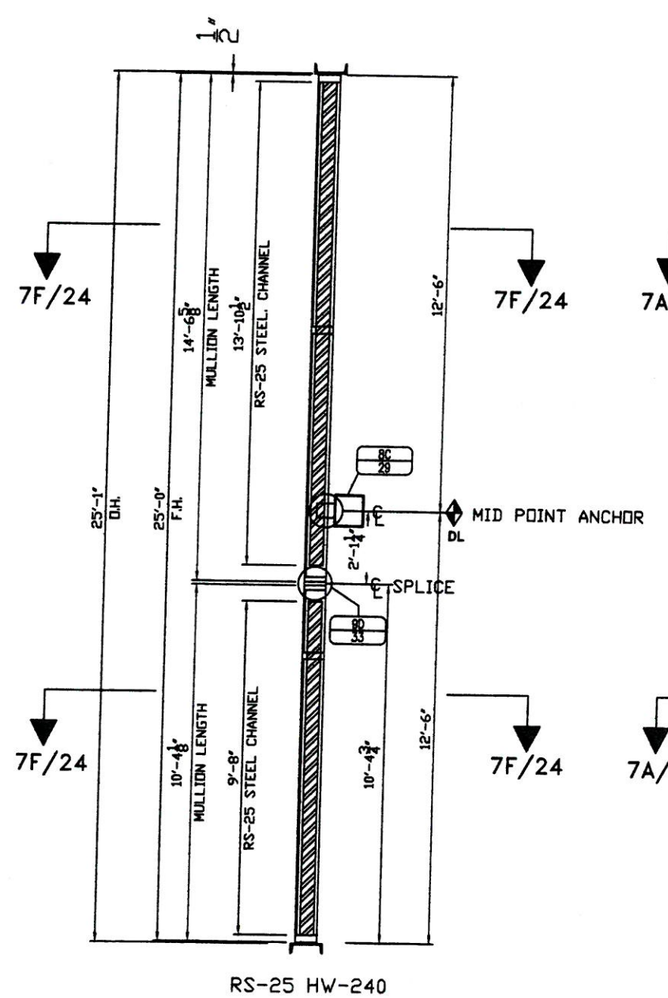

RS-25 HW-240

SIDEVIEW FOR CORNER MULLION
(SEE SHEET 10)

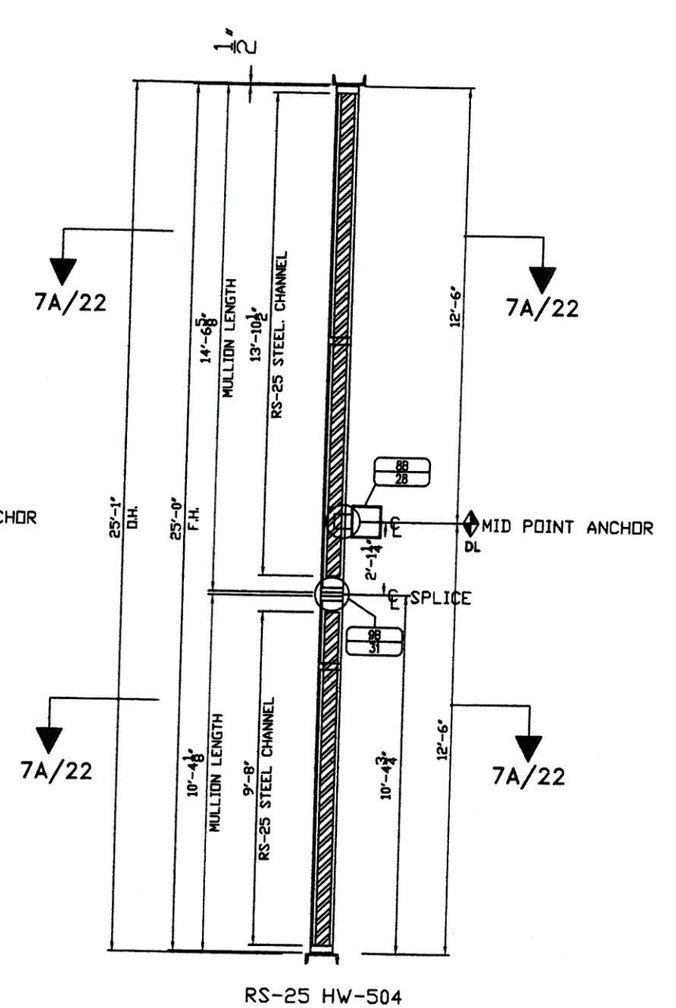

RS-25 HW-504

SIDEVIEW FOR STANDARD MULLION
(SEE SHEET 10)

TEXAS DEPARTMENT OF INSURANCE - 2006

RELIANCE STORMMAX SSG CURTAIN WALL SYSTEM LARGE MISSILE IMPACT INSULATED LAMINATED GLASS

DRAWN BY: F.R.L 10/16/14

DATE

14-079 DRAWING No

SHEET 11 OF 40

Oldcastle BuildingEnvelope®
803 AIRPORT RD. TERRELL, TX 75160
www.OldcastleBE.com-Phone 800-869-4567

MK. No.	DESCRIPTION	DATE	MK. No.	DESCRIPTION	DATE

WALTER A. TILLIT Jr P.E.
PROFESSIONAL ENGINEER
6355 N.W 36 STREET, STE. 305
VIRGINIA GARDENS, FL. 33166
PHONE(305) 871-1530 FAX (305) 871-1531
TEXAS LIC. # 90691
FIRM REGISTRATION # F-13790

1/5/16

P.E. SEAL/SIGNATURE/DATE

MAXIMUM DESIGN PRESSURE RATING FOR SINGLE & TWIN SPAN HEAD & SILL STANDARD OR CORNER MULLION CONNECTIONS

SINGLE AND TWIN SPAN HEAD & SILL CONNECTION					
MAX. MULLION SPAN	EFFECTIVE SPACING	MAX. DESIGN PRESSURE RATING			
		POURED CONCRETE MIN. (fc=3ksi) SUBSTRATE			1/4" MIN. THK ASTM A-36 STEEL SUBSTRATE
		FASTENERS TYPES			FASTENER
"L"(ft-in)	"b"(ft-in)	A	B	C, C'	D
12'-6" OR LESS	3'-0"	90.0	90.0	90.0	90.0
	3'-6"	90.0	90.0	90.0	90.0
	4'-0"	90.0	90.0	90.0	90.0

SINGLE & TWIN SPAN HEAD & SILL CONNECTION		
MAX. MULLION SPAN	EFFECTIVE SPACING	MAX. DESIGN PRESSURE RATING
		WOOD SUBSTRATE
"L"(ft-in)	"b"(ft-in)	FASTENER E
6'-0"	3'-0"	70.0
	3'-6"	70.0
	4'-0"	70.0
6'-6"	3'-0"	70.0
	3'-6"	70.0
	4'-0"	70.0
7'-0"	3'-0"	70.0
	3'-6"	70.0
	4'-0"	69.3
7'-6"	3'-0"	70.0
	3'-6"	70.0
	4'-0"	64.7
8'-0"	3'-0"	70.0
	3'-6"	69.0
	4'-0"	60.7
8'-6"	3'-0"	70.0
	3'-6"	65.0
	4'-0"	57.1
9'-0"	3'-0"	70.0
	3'-6"	62.0
	4'-0"	53.9

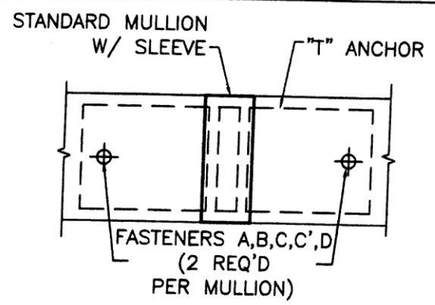

SCHEMATIC "T" ANCHOR/SLEEVE CONNECTION DETAIL FOR FASTENERS A, B, C, C' & D *

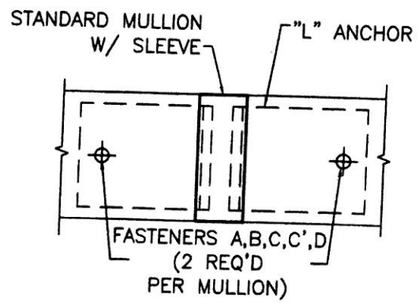

SCHEMATIC "L" ANCHOR/SLEEVE CONNECTION DETAIL FOR FASTENERS A, B, C, C' & D *

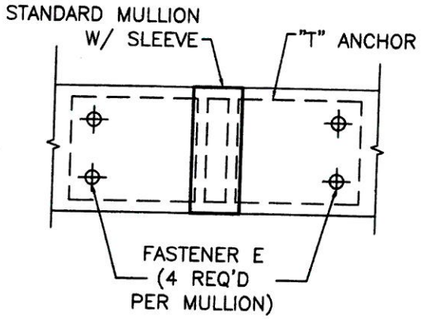

SCHEMATIC "T" ANCHOR/SLEEVE CONNECTION DETAIL FOR FASTENER E*

* SEE CONNECTION DETAILS ON SHEETS 19 & 26 FOR FASTENERS QUANTITY & LOCATIONS AT MULLION.

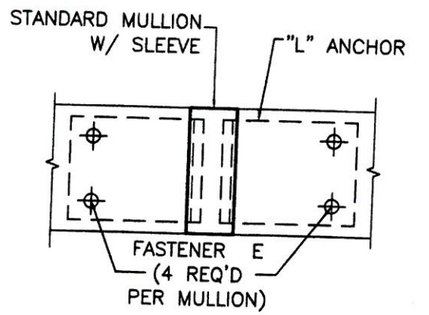

SCHEMATIC "L" ANCHOR/SLEEVE CONNECTION DETAIL FOR FASTENER E*

* SEE CONNECTION DETAILS ON SHEETS 19 & 26 FOR FASTENERS QUANTITY & LOCATIONS AT MULLION.

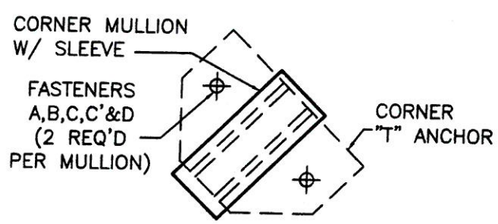

SCHEMATIC "T" ANCHOR/SLEEVE CONNECTION DETAIL FOR FASTENERS A, B, C, C' & D *

* SEE CONNECTION DETAILS ON SHEETS 21 & 26 FOR FASTENERS QUANTITY & LOCATIONS AT MULLION.

B FASTENERS TYPES REQUIREMENTS

A - 1/2"Ø HILTI KWIK BOLT TZ ANCHOR W/ 3 1/4" Min. EMBEDMENT INTO 8" Min. THICK POURED CONCRETE (Min. f'c = 3 ksi) BEYOND ANY FINISH MATERIAL, W/ 6" MIN. EDGE DISTANCE.

B - 1/2"Ø HILTI KWIK BOLT TZ ANCHOR W/ 3 1/4" Min. EMBEDMENT INTO 6" Min. THICK POURED CONCRETE (Min. f'c = 3 ksi) BEYOND ANY FINISH MATERIAL, W/ 7 1/2" MIN. EDGE DISTANCE.

C - 1/2"Ø HILTI KWIK HUS-H SCREW ANCHOR W/ 3" Min. EMBEDMENT INTO 4" Min. THICK POURED CONCRETE (Min. f'c = 3 ksi) BEYOND ANY FINISH MATERIAL, W/ 3 3/4" MIN. EDGE DISTANCE.

C' -1/2"Ø POWERS FASTENERS WEDGE BOLT W/4" Min. EMBEDMENT INTO 6" Min. THICK POURED CONCRETE (Min. f'c= 3 ksi) BEYOND ANY FINISH MATERIAL W/6" Min. EDGE DISTANCE.

D - 1/2"Ø-13 TYPE "F" GRADE 5 BOLT TO 1/4" MIN. THK. ASTM A-36 STEEL W/ 1" Min. EDGE DISTANCE TO 1/4" Min. THK. ASTM A-36 STEEL W/ 1" MIN. EDGE DISTANCE.

E - 3/8" Ø LAG SCREW W/ 3" MIN. EMBEDMENT INTO G=0.55" MIN. SPECIFITY GRAVITY WOOD SUBSTRATE W/ 1 1/2" MIN. EDGE DISTANCE.

TEXAS DEPARTMENT OF INSURANCE – 2006

RELIANCE STORMMAX SSG CURTAIN WALL SYSTEM LARGE MISSILE IMPACT INSULATED LAMINATED GLASS

DRAWN BY: F.R.L
DATE: 10/16/14
DRAWING No: 14-079
SHEET 12 OF 40

Oldcastle BuildingEnvelope®
803 AIRPORT RD. TERRELL TX 75160
www.Oldcastle BE.com-Phone 800-869-4567

WALTER A. TILLIT Jr P.E.
PROFESSIONAL ENGINEER
6355 N.W 36 STREET, STE. 305
VIRGINIA GARDENS, FL 33166
PHONE(305) 871-1531 FAX (305) 871-1530
TEXAS LIC. # 90691
FIRM REGISTRATION # F-13790

1/5/16

P.E. SEAL/SIGNATURE/DATE

MAXIMUM DESIGN PRESSURE RATING FOR SINGLE & TWIN SPAN HEAD & SILL JAMB MULLION CONNECTIONS

SINGLE AND TWIN SPAN HEAD & SILL CONNECTION			
MAX. MULLION SPAN	EFFECTIVE SPACING	MAX. DESIGN PRESSURE RATING	
		1/4" MIN. THK ASTM A-36 STEEL SUBSTRATE	POURED CONCRETE MIN. (fc=3ksi) SUBSTRATE
		FASTENER	FASTENER
"L"(ft-in)	"b"(ft-in)	D	G
12'-6" OR LESS	3'-0"	90.0	90.0
	3'-6"	90.0	90.0
	4'-0"	90.0	90.0

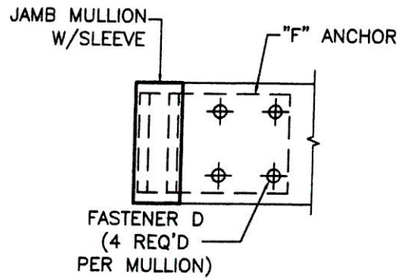

SCHEMATIC "F" ANCHOR/SLEEVE CONNECTION DETAIL FOR FASTENERS D *

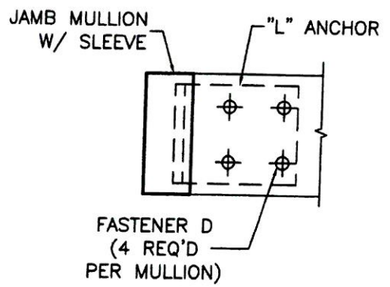

SCHEMATIC "L" ANCHOR/SLEEVE CONNECTION DETAIL FOR FASTENERS D *

SINGLE & TWIN SPAN HEAD & SILL CONNECTION		
MAX. MULLION SPAN	EFFECTIVE SPACING	MAX. DESIGN PRESSURE RATING
		POURED CONCRETE MIN. (fc=3ksi) SUBSTRATE
"L"(ft-in)	"b"(ft-in)	FASTENER F
12'-6" OR LESS	3'-0"	80.0
	3'-6"	80.0
	4'-0"	80.0
	5'-0"	80.0

SINGLE & TWIN SPAN HEAD & SILL CONNECTION		
MAX. MULLION SPAN	EFFECTIVE SPACING	MAX. DESIGN PRESSURE RATING
		WOOD SUBSTRATE
"L"(ft-in)	"b"(ft-in)	FASTENER E
6'-0"	3'-0"	70.0
	3'-6"	70.0
	4'-0"	70.0
6'-6"	3'-0"	70.0
	3'-6"	70.0
	4'-0"	70.0
7'-0"	3'-0"	70.0
	3'-6"	70.0
	4'-0"	69.3
7'-6"	3'-0"	70.0
	3'-6"	70.0
	4'-0"	64.7
8'-0"	3'-0"	70.0
	3'-6"	69.0
	4'-0"	60.7
8'-6"	3'-0"	70.0
	3'-6"	65.0
	4'-0"	57.1
9'-0"	3'-0"	70.0
	3'-6"	62.0
	4'-0"	53.9

* SEE CONNECTION DETAILS ON SHEETS 20 & 26 FOR FASTENERS QUANTITY & LOCATIONS AT MULLION.

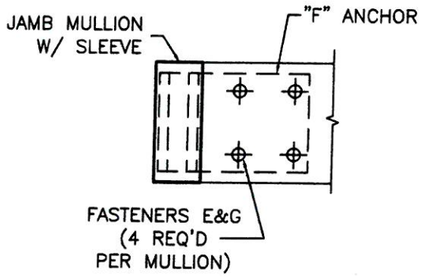

SCHEMATIC "F" ANCHOR/SLEEVE CONNECTION DETAIL FOR FASTENERS E & G *

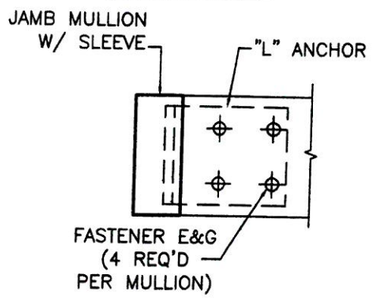

SCHEMATIC "L" ANCHOR/SLEEVE CONNECTION DETAIL FOR FASTENERS E & G *

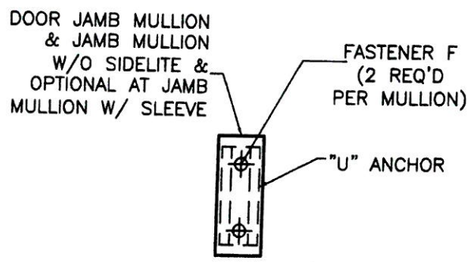

SCHEMATIC "U" ANCHOR W/ SLEEVE CONNECTION DETAIL FOR FASTENER F*

* SEE CONNECTION DETAILS ON SHEETS 26, 37 & 38 FOR FASTENERS QUANTITY & LOCATIONS AT MULLION.

B FASTENERS TYPES REQUIREMENTS

D - 1/2"Ø-13 TYPE "F" GRADE 5 BOLT TO 1/4" MIN. THK. ASTM A-36 STEEL W/ 1" Min. EDGE DISTANCE TO 1/4" Min. THK. ASTM A-36 STEEL W/ 1" MIN. EDGE DISTANCE.

E - 3/8" Ø LAG SCREW W/ 3" MIN. EMBEDMENT INTO G=0.55" MIN. SPECIFITY GRAVITY WOOD SUBSTRATE W/ 1 1/2" MIN. EDGE DISTANCE.

F - 1/2" Ø POWER FASTENERS WEDGE BOLT, W/ 3 1/2" MIN. EMBEDMENT INTO 6" MIN. THICK POURED CONCRETE (f'c=3 ksi) BEYOND ANY FINISH MATERIAL W/ 6" MIN. EDGE DISTANCE.

G - 3/8" Ø POWER FASTENERS WEDGE BOLT, W/ 3 1/2" MIN. EMBEDMENT INTO 6" MIN. THICK POURED CONCRETE (f'c=3 ksi) BEYOND ANY FINISH MATERIAL W/ 4 1/2" MIN. EDGE DISTANCE.

TEXAS DEPARTMENT OF INSURANCE - 2006
RELIANCE STORMMAX SSG CURTAIN WALL SYSTEM LARGE MISSILE IMPACT INSULATED LAMINATED GLASS
DRAWN BY: F.R.I.
DATE 10/16/14
14-079 DRAWING No
SHEET 13 OF 40

Oldcastle BuildingEnvelope®
803 AIRPORT RD, TERRELL, TX 75160
www.Oldcastle-BE.com-Phone 800-869-4567

WALTER A. TILLIT Jr P.E.
PROFESSIONAL ENGINEER
6355 N.W 36 STREET, STE. 305
VIRGINIA GARDENS, FL 33166
PHONE(305) 871-1531 FAX (305) 871-1531
TEXAS LIC. # 90691
FIRM REGISTRATION # F-13790

STATE OF TEXAS — WALTER A. TILLIT — 90691 — LICENSED PROFESSIONAL ENGINEER

1/5/16

P.E. SEAL/SIGNATURE/DATE

HEAD CONNECTION DETAILS (SIDE VIEWS)

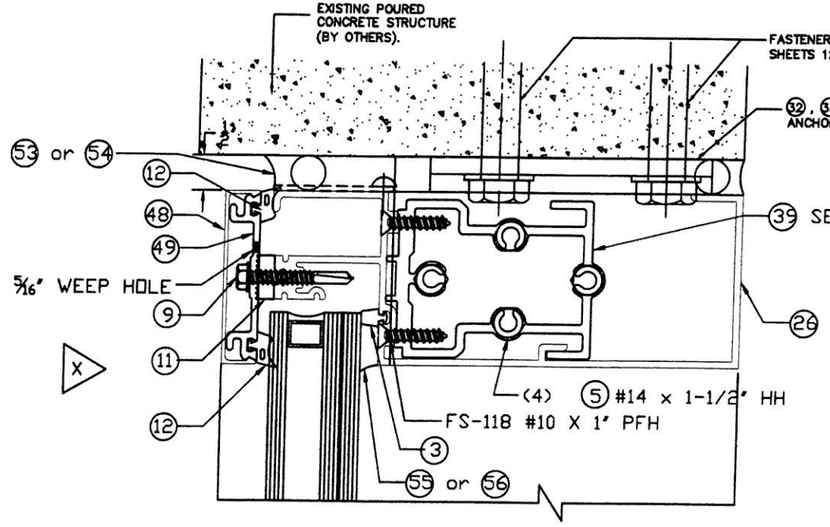

1A
HEAD(CONC)

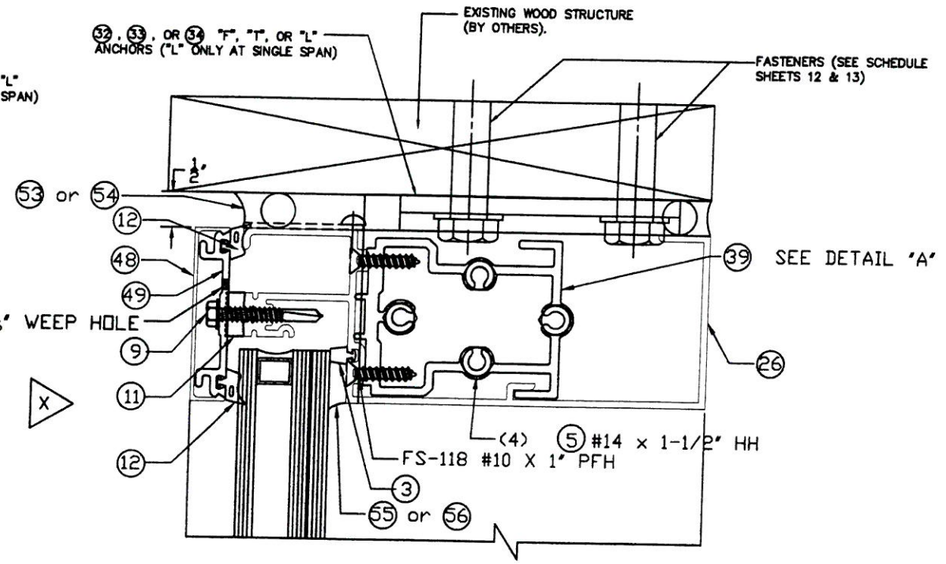

1C
HEAD(WOOD)

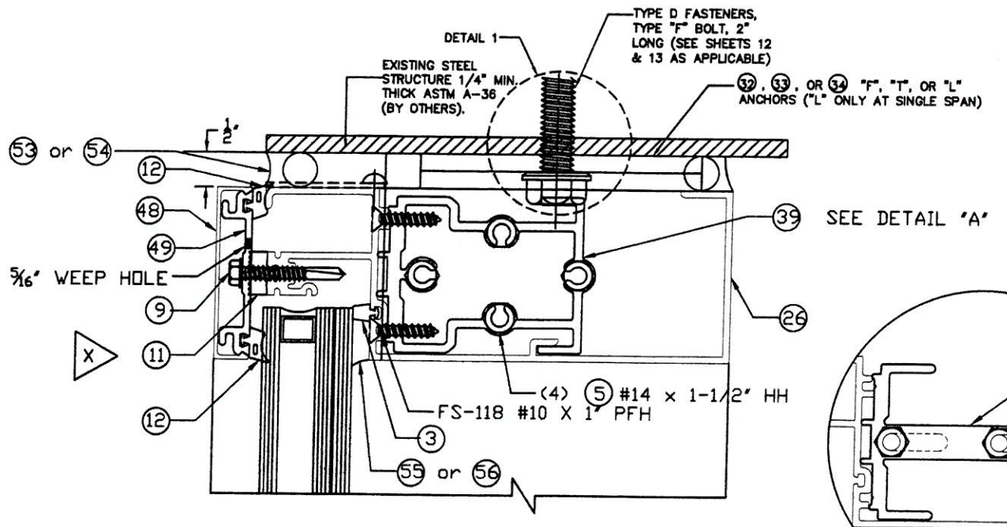

1B
HEAD(STEEL)

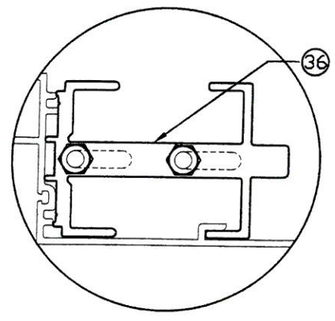

DETAIL "A"

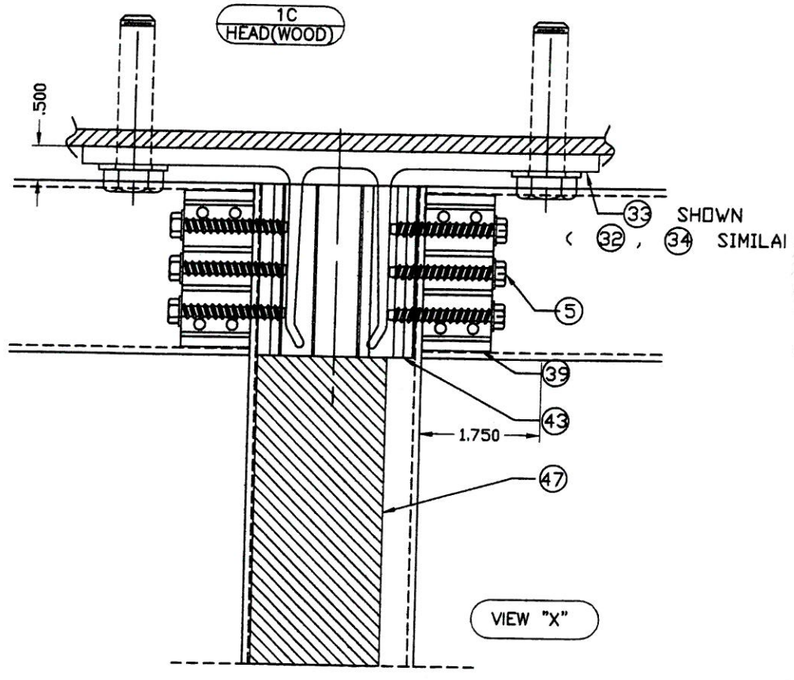

VIEW "X"

TEXAS DEPARTMENT OF INSURANCE - 2006

RELIANCE STORMMAX SSG CURTAIN WALL SYSTEM LARGE MISSILE IMPACT INSULATED LAMINATED GLASS

DRAWN BY: F.R.L. 10/16/14

DATE

14-079 DRAWING No

SHEET 14 OF 40

Oldcastle BuildingEnvelope®
803 AIRPORT RD. TERRELL, TX 75160
www.OldcastleBE.com Phone 800-869-4567

DESCRIPTION	DATE	MFR. No.	DESCRIPTION	DATE	MFR. No.

WALTER A. TILLIT Jr P.E.
PROFESSIONAL ENGINEER
6355 N.W 36 STREET, STE. 305
VIRGINIA GARDENS, FL 33166
PHONE(305) 871-1531 FAX (305) 871-1530
TEXAS LIC. # 90691
FIRM REGISTRATION # F-13790

1/15/16

P.E. SEAL/SIGNATURE/DATE

HORIZONTAL (NON EXPANSION) CONNECTION DETAILS FOR INSULATED LAMINATED GLASS (SIDE VIEWS)

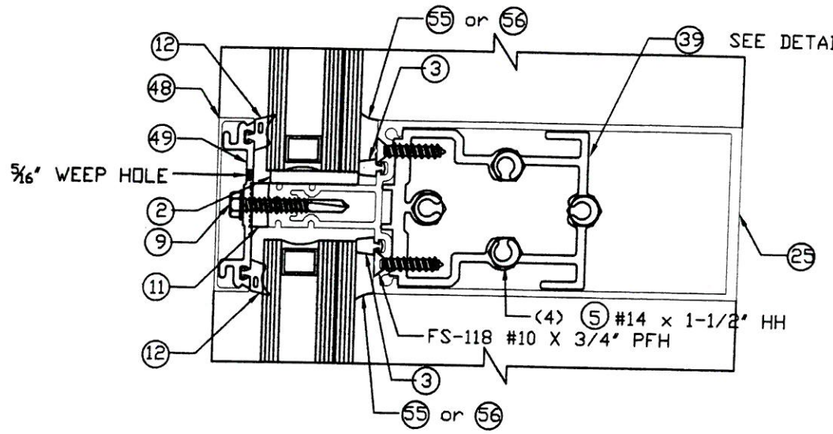

2A
HORIZONTAL

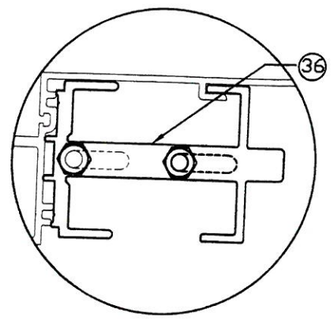

DETAIL "A"

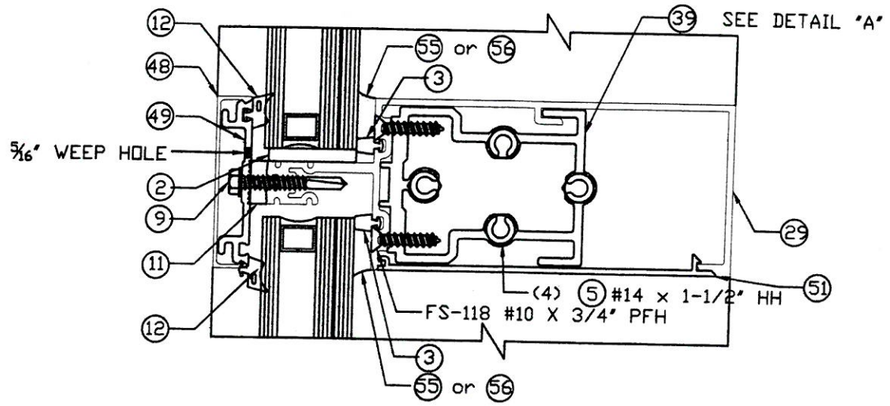

2B
HORIZONTAL

TEXAS DEPARTMENT OF INSURANCE - 2006

RELIANCE STORMMAX SSG CURTAIN WALL SYSTEM LARGE MISSILE IMPACT INSULATED LAMINATED GLASS

DRAWN BY: F.R.L
DATE: 10/16/14
14-079 DRAWING No
SHEET 15 OF 40

Oldcastle BuildingEnvelope®
803 AIRPORT RD. TERRELL, TX 75160
www.OldcastleBE.com-Phone 800-869-4567

REV. No.	DESCRIPTION	BASE	REV. No.	DESCRIPTION	DATE

WALTER A. TILLIT Jr P.E.
PROFESSIONAL ENGINEER
8355 N.W 36 STREET, STE. 305
VIRGINIA GARDENS, FL 33166
PHONE(305) 871-1530 FAX (305) 871-1531
TEXAS LIC. # 90691
FIRM REGISTRATION # F-13790

1/3/16

P.E. SEAL/SIGNATURE/DATE

HORIZONTAL (NON EXPANSION) CONNECTION DETAIL FOR INSULATED LAMINATED GLASS (SIDE VIEW)

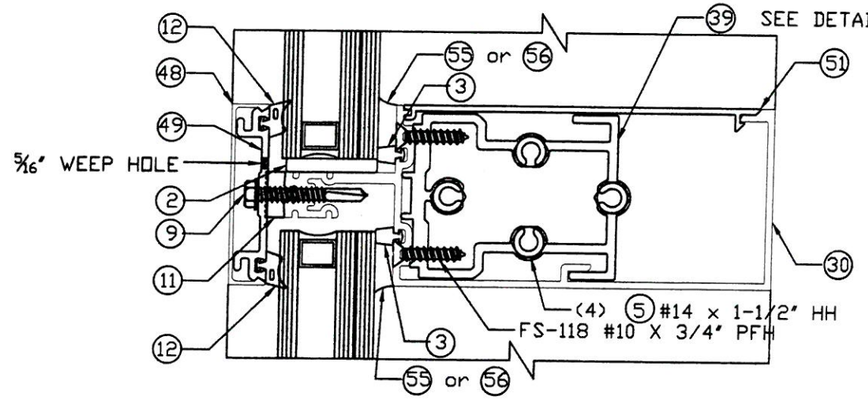

2C
HORIZONTAL

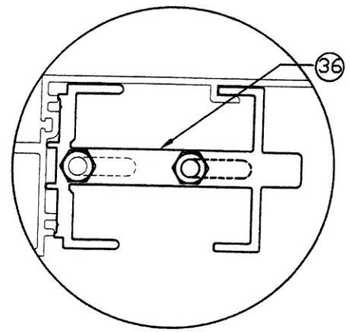

DETAIL "A"

TEXAS DEPARTMENT OF INSURANCE – 2006

RELIANCE STORMMAX SSG CURTAIN WALL SYSTEM LARGE MISSILE IMPACT INSULATED LAMINATED GLASS

DRAWN BY: F.R.L 10/16/14

DATE

14-079 DRAWING No

SHEET 16 OF 40

Oldcastle BuildingEnvelope®
803 AIRPORT RD. TERRELL, TX. 75160
www.OldcastleBE.com Phone 800-869-4567

DESCRIPTION	DATE	REV. No	DESCRIPTION	DATE

WALTER A. TILLIT Jr P.E.
PROFESSIONAL ENGINEER
6355 N.W. 36 STREET, STE. 305
VIRGINIA GARDENS, FL 33166
PHONE(305) 871-1530 FAX (305) 871-1531
TEXAS LIC. # 90691
FIRM REGISTRATION # F-13790

1/5/16

P.E. SEAL/SIGNATURE/DATE

EXPANSION HORIZONTAL CONNECTION DETAILS FOR INSULATED LAMINATED GLASS (SIDE VIEWS)

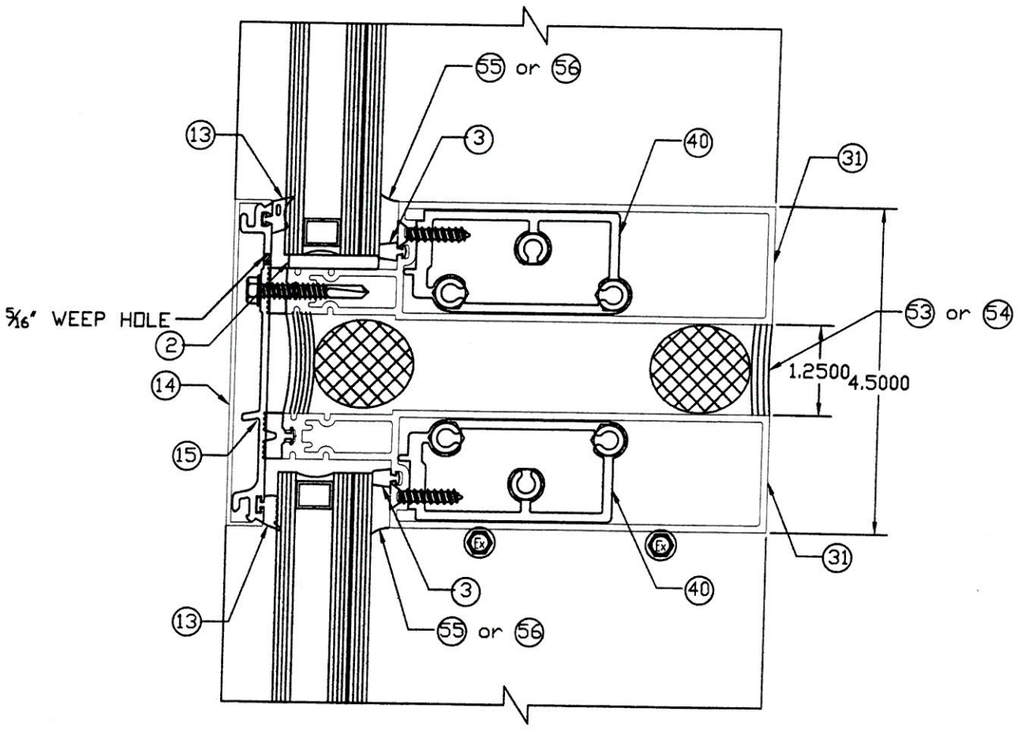

2D
HORIZONTAL AT STD OR JAMB MULLION

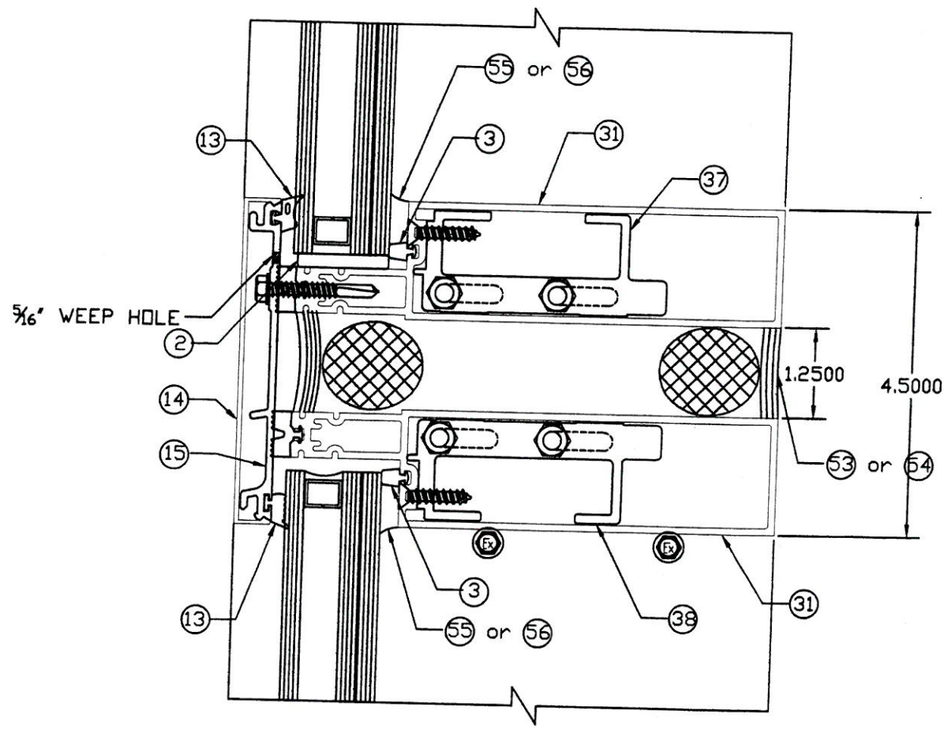

2E
HORIZONTAL AT CORNER MULLION

TEXAS DEPARTMENT OF INSURANCE - 2006

RELIANCE STORMMAX SSG CURTAIN WALL SYSTEM LARGE MISSILE IMPACT INSULATED LAMINATED GLASS

DRAWN BY: F.R.L
DATE: 10/16/14

Oldcastle BuildingEnvelope®
803 AIRPORT RD. TERRELL, TX. 75160
www.OldcastleBE.com-Phone 800-869-4567

14-079
DRAWING No

SHEET 17 OF 40

WALTER A. TILLIT Jr P.E.
PROFESSIONAL ENGINEER
6355 N.W 36 STREET, STE. 305
VIRGINIA GARDENS, FL. 33166
PHONE(305) 871-1530 FAX (305) 871-1531
TEXAS LIC. # 90691
FIRM REGISTRATION # F-13790

STATE OF TEXAS — WALTER A. TILLIT — 90691 — LICENSED PROFESSIONAL ENGINEER

1/5/16

P.E. SEAL/SIGNATURE/DATE

SILL CONNECTION DETAILS (SIDE VIEWS)

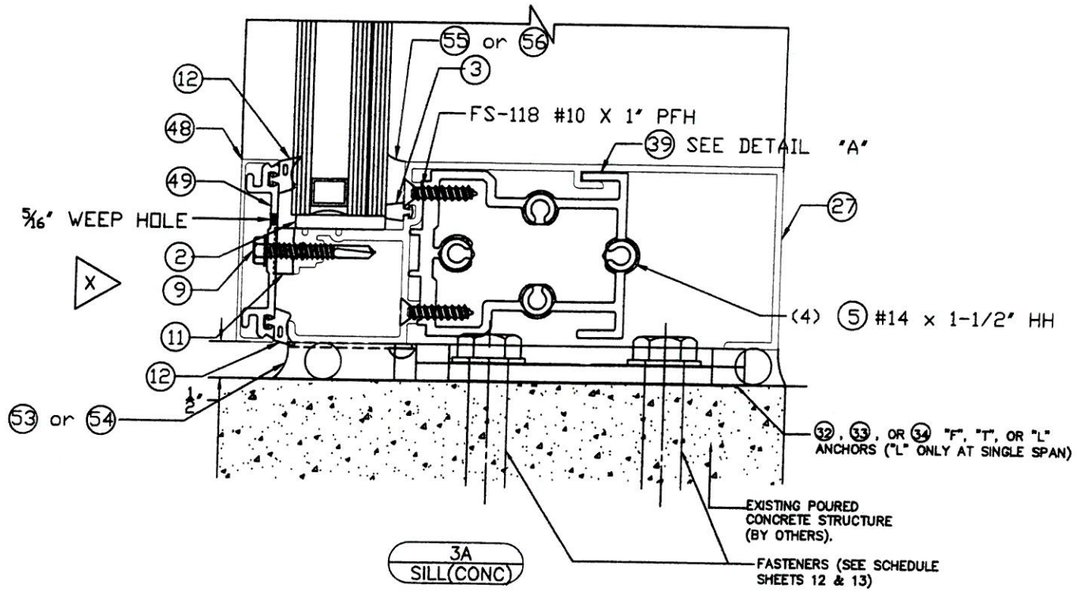

3A
SILL(CONC)

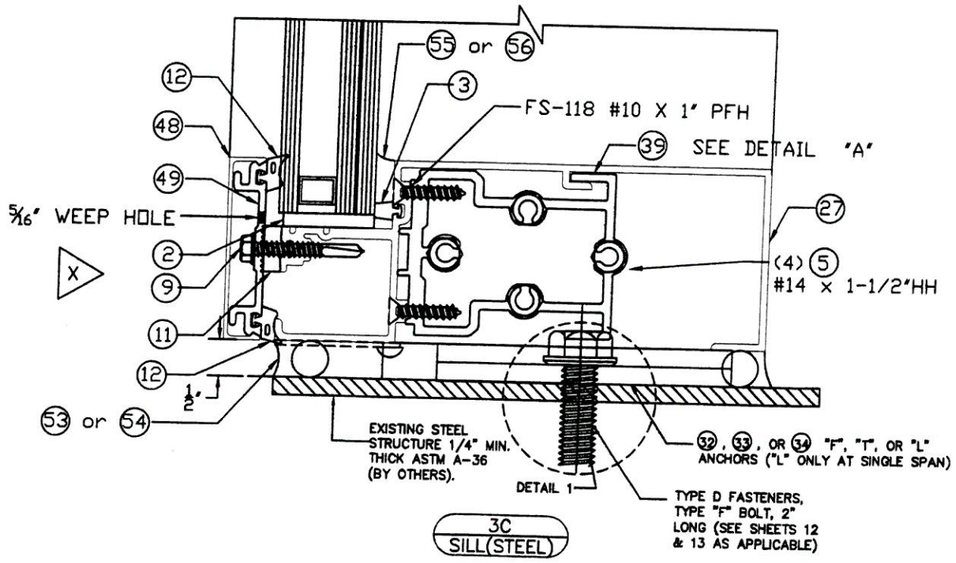

3C
SILL(STEEL)

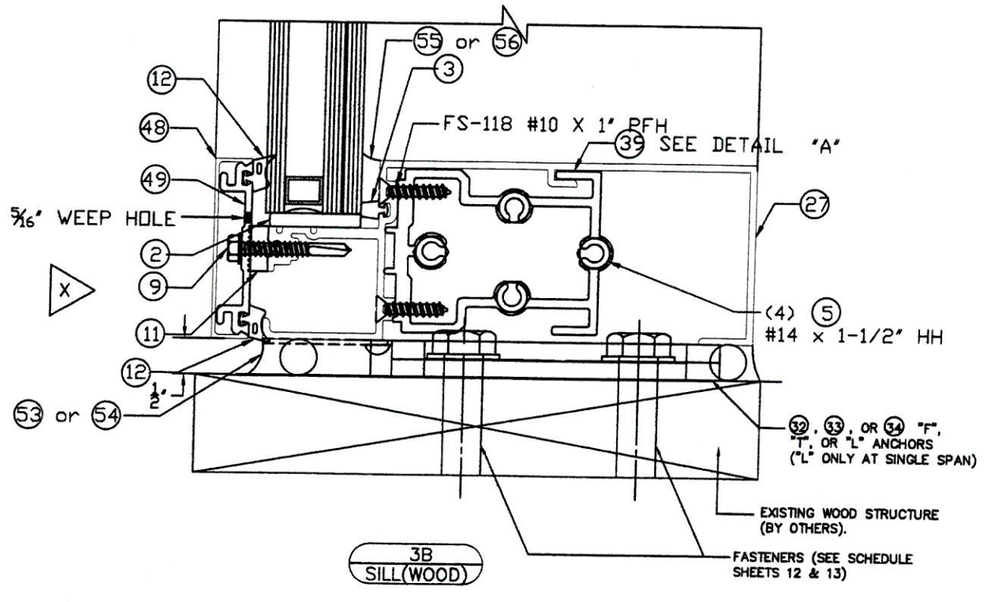

3B
SILL(WOOD)

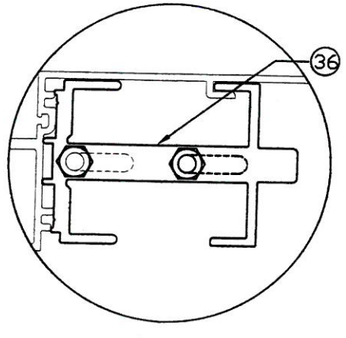

DETAIL "A"

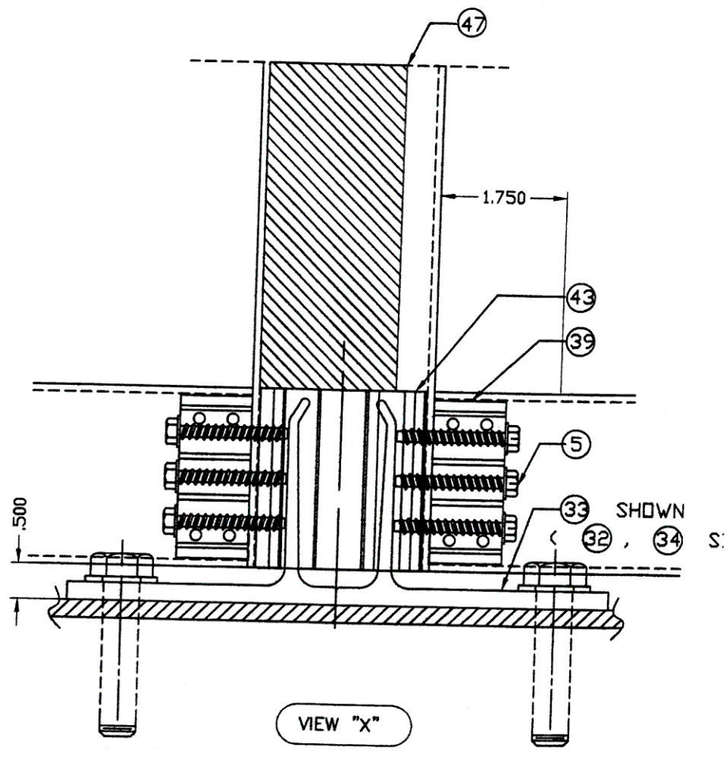

VIEW "X"

TEXAS DEPARTMENT OF INSURANCE - 2006
RELIANCE STORMMAX SSG CURTAIN WALL SYSTEM LARGE MISSILE IMPACT INSULATED LAMINATED GLASS
DRAWN BY: F.R.L
DATE: 10/16/14
14-079 DRAWING No
SHEET 18 OF 40

Oldcastle BuildingEnvelope®
803 AIRPORT RD. TERRELL, TX 75160
www.OldcastleBE.com-Phone 800-869-4567

REV. No.	DESCRIPTION	DATE	APP. No.	DESCRIPTION	DATE

WALTER A. TILLIT Jr P.E.
PROFESSIONAL ENGINEER
6355 N.W 36 STREET, STE. 305
VIRGINIA GARDENS, FL 33166
PHONE(305) 871-1530 FAX (305) 871-1531
TEXAS LIC. # 90691
FIRM REGISTRATION # F-13790

1/5/16

P.E. SEAL/SIGNATURE/DATE

SILL & HEAD CONNECTION DETAILS FOR STANDARD MULLION AT SINGLE & TWIN SPAN (PLAN)

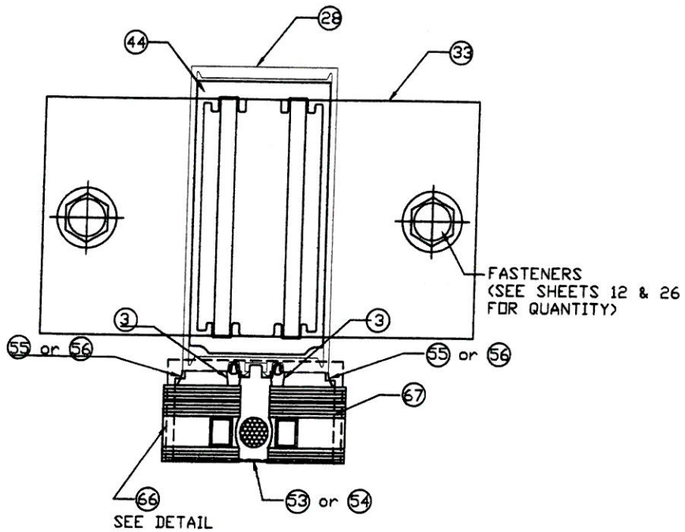

4A
STD HEAVY MULLION

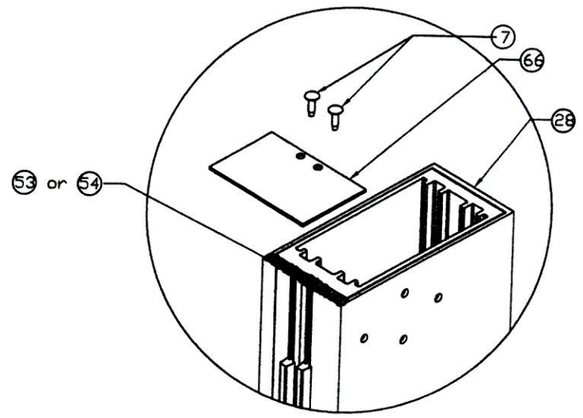

DETAIL "D"

NOTE: TO ASSURE PROPER PERIMETER SEAL AT HEAD AND SILL INSTALL HW-358 MULLION END CAP

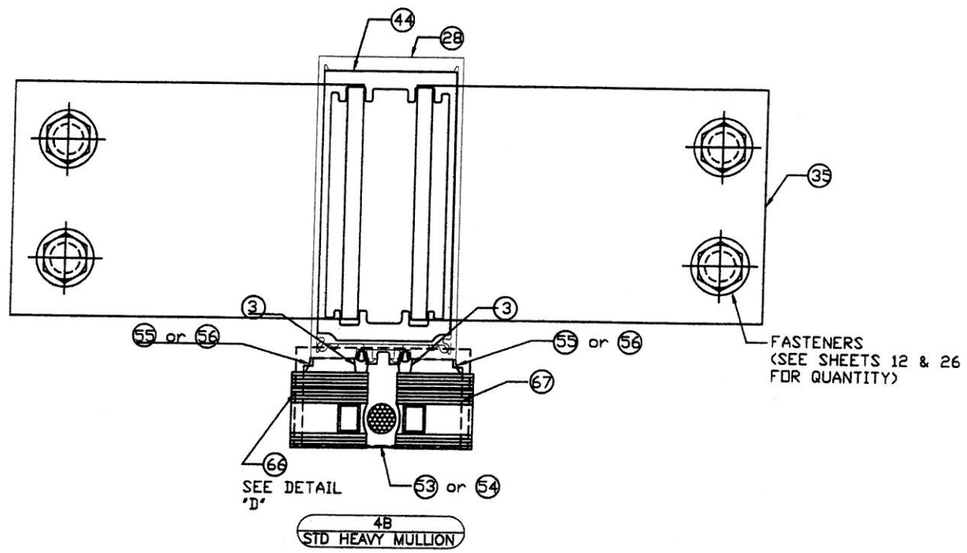

4B
STD HEAVY MULLION

TEXAS DEPARTMENT OF INSURANCE – 2006

RELIANCE STORMMAX SSG CURTAIN
WALL SYSTEM LARGE MISSILE IMPACT
INSULATED LAMINATED GLASS

Oldcastle BuildingEnvelope
803 AIRPORT RD. TERRELL TX 75160
www.OldcastleBE.com-Phone 800-869-4567

DRAWN BY: F.R.L
10/16/14
DATE
14-079
DRAWING No
SHEET 19 OF 40

WALTER A. TILLIT Jr P.E.
PROFESSIONAL ENGINEER
6355 N.W 36 STREET, STE. 305
VIRGINIA GARDENS, FL 33166
PHONE(305) 871-1530 FAX (305) 871-1531
TEXAS LIC. # 90691
FIRM REGISTRATION # F-13790

1/5/16

P.E. SEAL/SIGNATURE/DATE

SILL & HEAD CONNECTION DETAILS FOR JAMB MULLION AT SINGLE & TWIN SPAN (PLAN)

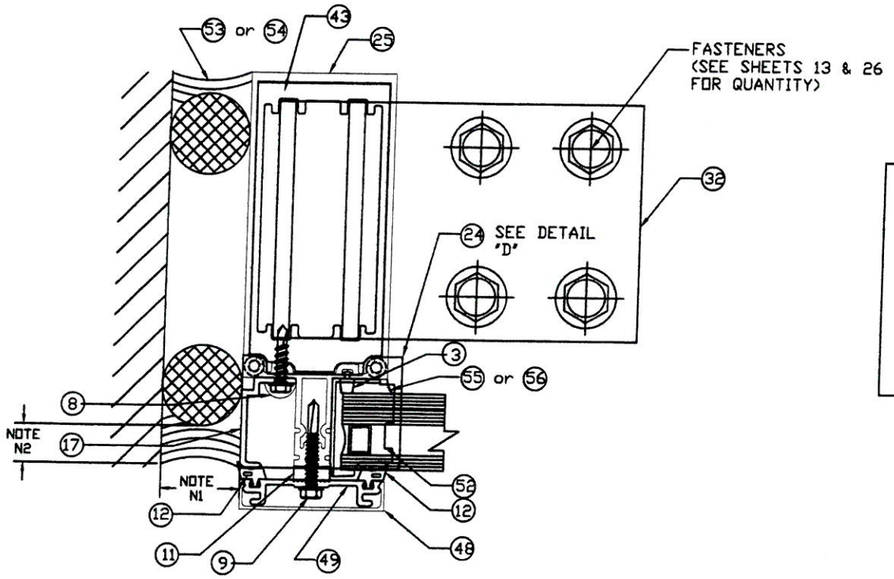

5A
JAMB MULLION

SEALANT JOINT NOTES

N1 : 3/8" MIN. & 1 3/8" MAX. WIDE JOINT W/ SEALANT 53 OR 54

N2 : 1/4" MIN. & 3/8" MAX. DEPTH JOINT W/ 1/4" DEPTH AT MIDWIDTH OF JOINT W/ SEALANT 53 OR 54

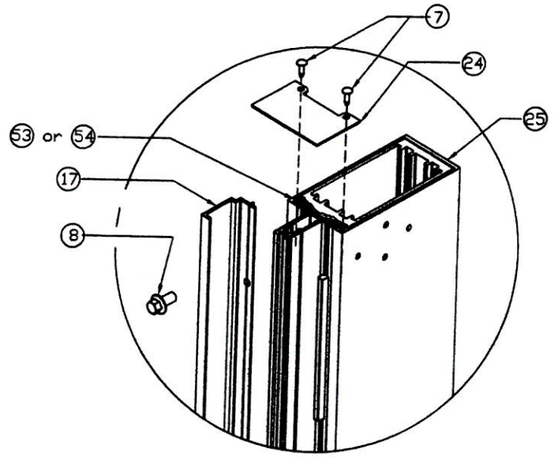

DETAIL "D"

NOTE: TO ASSURE PROPER PERIMETER SEAL AT HEAD AND SILL INSTALL HW-338 JAMB END CAP

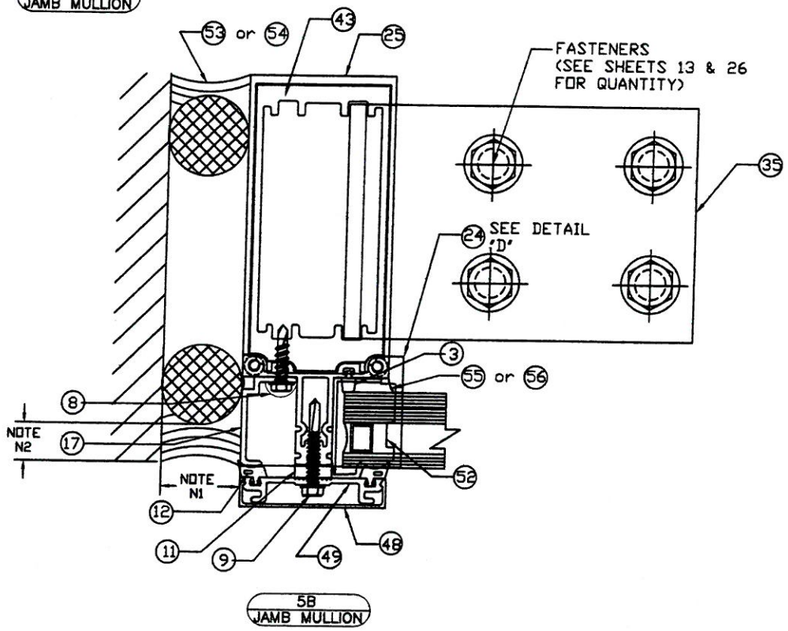

5B
JAMB MULLION

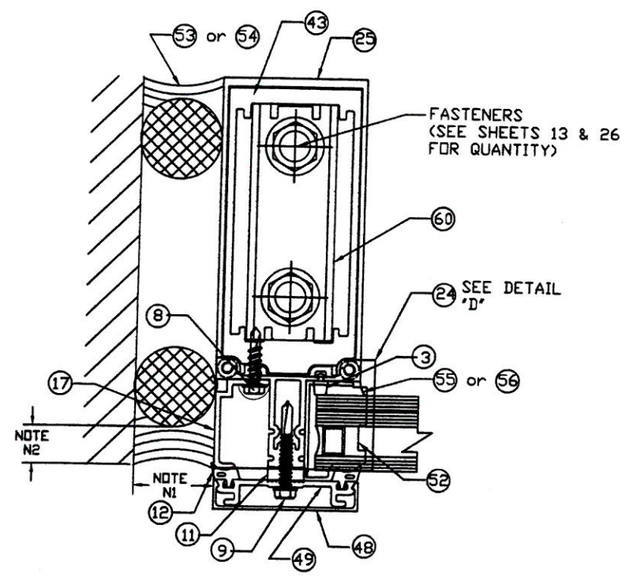

5C
JAMB MULLION

TEXAS DEPARTMENT OF INSURANCE - 2006

RELIANCE STORMMAX SSG CURTAIN
WALL SYSTEM LARGE MISSILE IMPACT
INSULATED LAMINATED GLASS

Oldcastle BuildingEnvelope™
803 AIRPORT RD. TERRELL TX 75160
www.OldcastleBE.com-Phone 800-869-4567

DRAWN BY: F.R.L
10/16/14
DATE
14-079
DRAWING No
SHEET 20 OF 40

REV. No	DESCRIPTION	DATE	REV. No	DESCRIPTION	DATE

WALTER A. TILLIT Jr P.E.
PROFESSIONAL ENGINEER
6355 N.W 36 STREET, STE. 305
VIRGINIA GARDENS, FL 33166
PHONE(305) 871-1530 FAX (305) 871-1531
TEXAS LIC. # 90691
FIRM REGISTRATION # F-13790

1/5/16

P.E. SEAL/SIGNATURE/DATE

SILL & HEAD CONNECTION DETAIL FOR CORNER MULLION AT SINGLE & TWIN SPAN (PLAN)

6A
CORNER MULLION

VIEW "X"

TEXAS DEPARTMENT OF INSURANCE – 2006

RELIANCE STORMMAX SSG CURTAIN WALL SYSTEM LARGE MISSILE IMPACT INSULATED LAMINATED GLASS

DRAWN BY: F.R.L. 10/16/14

DATE

14-079 DRAWING No

SHEET 21 OF 40

Oldcastle BuildingEnvelope®
803 AIRPORT RD. TERRELL, TX 75160
www.OldcastleBE.com-Phone 800-869-4567

MFR. No.	DESCRIPTION	DATE	MFR. No.	DESCRIPTION	DATE

WALTER A. TILLIT Jr P.E.
PROFESSIONAL ENGINEER
6355 N.W. 36 STREET, STE. 305
VIRGINIA GARDENS, FL 33166
PHONE(305) 871-1530 FAX (305) 871-1531
TEXAS LIC. # 90691
FIRM REGISTRATION # F-13790

1/5/16

P.E. SEAL/SIGNATURE/DATE

HORIZONTAL SECTION AT STANDARD MULLIONS (PLAN)

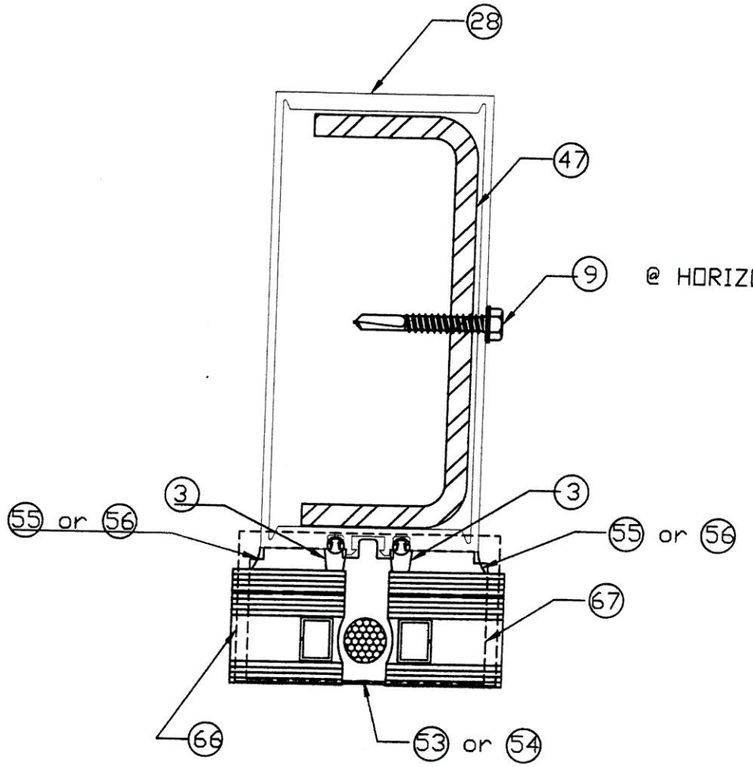

7A
STD HEAVY MULLION

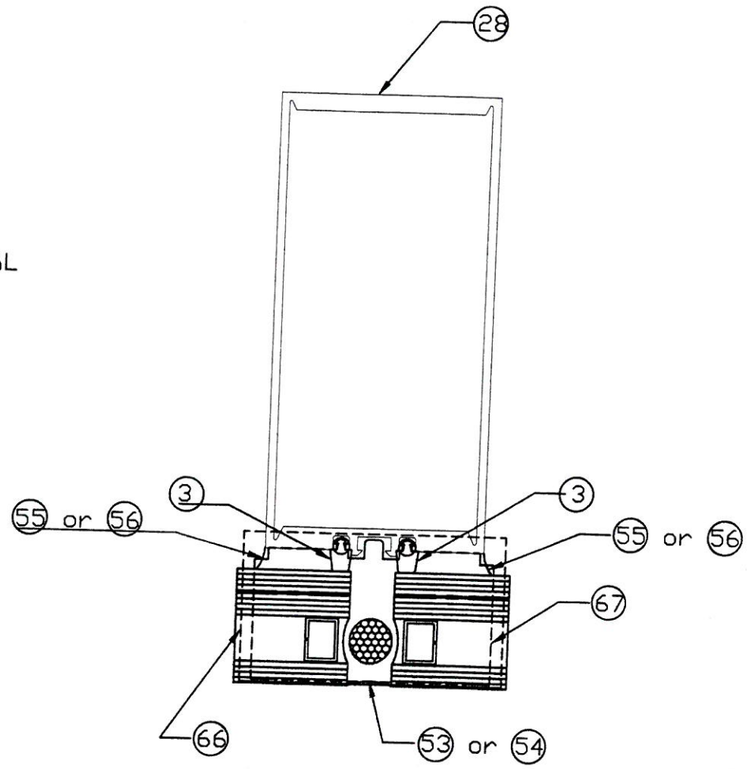

7B
STD HEAVY MULLION

TEXAS DEPARTMENT OF INSURANCE - 2006

RELIANCE STORMMAX SSG CURTAIN WALL SYSTEM LARGE MISSILE IMPACT INSULATED LAMINATED GLASS

DRAWN BY: F.R.L
10/16/14

DATE

14-079
DRAWING No

SHEET 22 OF 40

Oldcastle BuildingEnvelope®
803 AIRPORT RD. TERRELL TX 75160
www.OldcastleBE.com-Phone 800-869-4567

REV. No	DATE	DESCRIPTION

WALTER A. TILLIT Jr P.E.
PROFESSIONAL ENGINEER
6355 N.W 36 STREET, STE. 305
VIRGINIA GARDENS, FL 33166
PHONE(305) 871-1531 FAX (305) 871-1531
TEXAS LIC. # 90691
FIRM REGISTRATION # F-13790

P.E. SEAL/SIGNATURE/DATE

1/5/16

HORIZONTAL SECTION AT JAMB MULLIONS (PLAN)

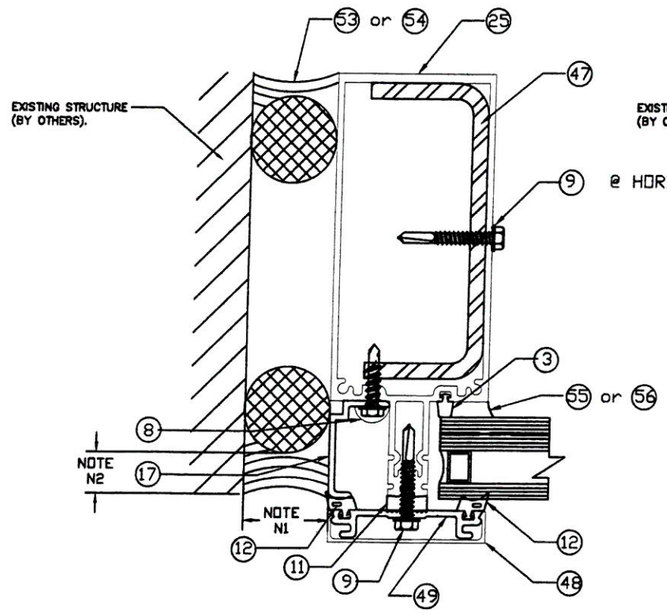

7C
JAMB MULLION

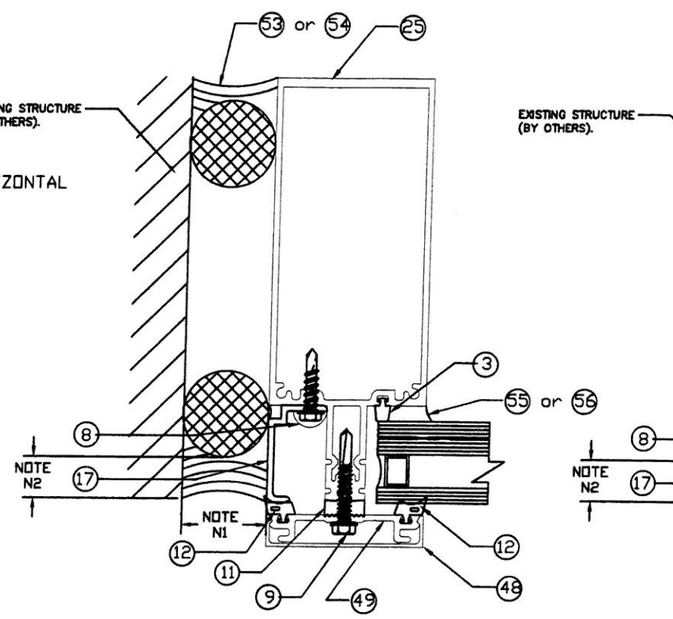

7D
JAMB MULLION

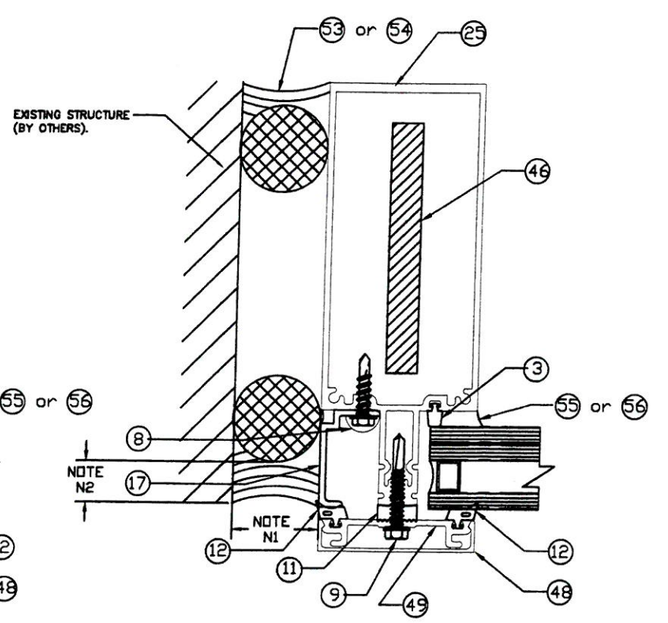

7E
JAMB MULLION

SEALANT JOINT NOTES

N1 : 3/8" MIN. & 1 3/8" MAX. WIDE JOINT W/ SEALANT (53) OR (54)

N2 : 1/4" MIN. & 3/8" MAX. DEPTH JOINT W/ 1/4" DEPTH AT MIDWIDTH OF JOINT W/ SEALANT (53) OR (54)

TEXAS DEPARTMENT OF INSURANCE - 2006

RELIANCE STORMMAX SSG CURTAIN WALL SYSTEM LARGE MISSILE IMPACT INSULATED LAMINATED GLASS

DRAWN BY: F.P.L.

DATE: 10/16/14

14-079
DRAWING No

SHEET 23 OF 40

Oldcastle BuildingEnvelope®
803 AIRPORT RD. TERRELL, TX 75160
www.OldcastleBE.com-Phone 800-869-4567

REV. No	DESCRIPTION	BASE	REV. No	DESCRIPTION	BASE

WALTER A. TILLIT Jr P.E.
PROFESSIONAL ENGINEER
6355 N.W 36 STREET, STE. 305
VIRGINIA GARDENS, FL 33166
PHONE(305) 871-1530 FAX (305) 871-1531
TEXAS LIC. # 90691
FIRM REGISTRATION # F-13790

1/5/16

P.E. SEAL/SIGNATURE/DATE

HORIZONTAL SECTION AT CORNER MULLION (PLAN)

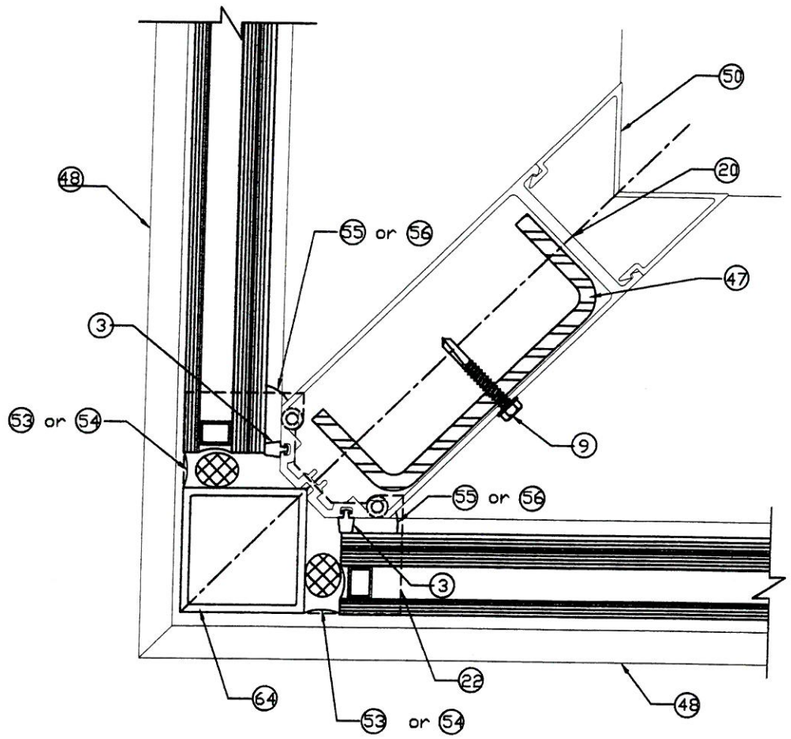

7F
CORNER MULLION

TEXAS DEPARTMENT OF INSURANCE - 2006

RELIANCE STORMMAX SSG CURTAIN WALL SYSTEM LARGE MISSILE IMPACT INSULATED LAMINATED GLASS

DRAWN BY: F.R.L
10/16/14

DATE

Oldcastle BuildingEnvelope
903 AIRPORT RD. TERRELL, TX 75160
www.OldcastleBE.com-Phone 800-869-4567

14-079
DRAWING No

SHEET 24 OF 40

WALTER A. TILLIT Jr P.E.
PROFESSIONAL ENGINEER
6335 N.W 36 STREET, STE. 305
VIRGINIA GARDENS, FL 33166
PHONE(305) 871-1530 FAX (305) 871-1531
TEXAS LIC. # 90691
FIRM REGISTRATION # F-13790

1/5/16

P.E. SEAL/SIGNATURE/DATE

HORIZONTAL SECTION AT INSIDE CORNER JAMB MULLION (PLAN)

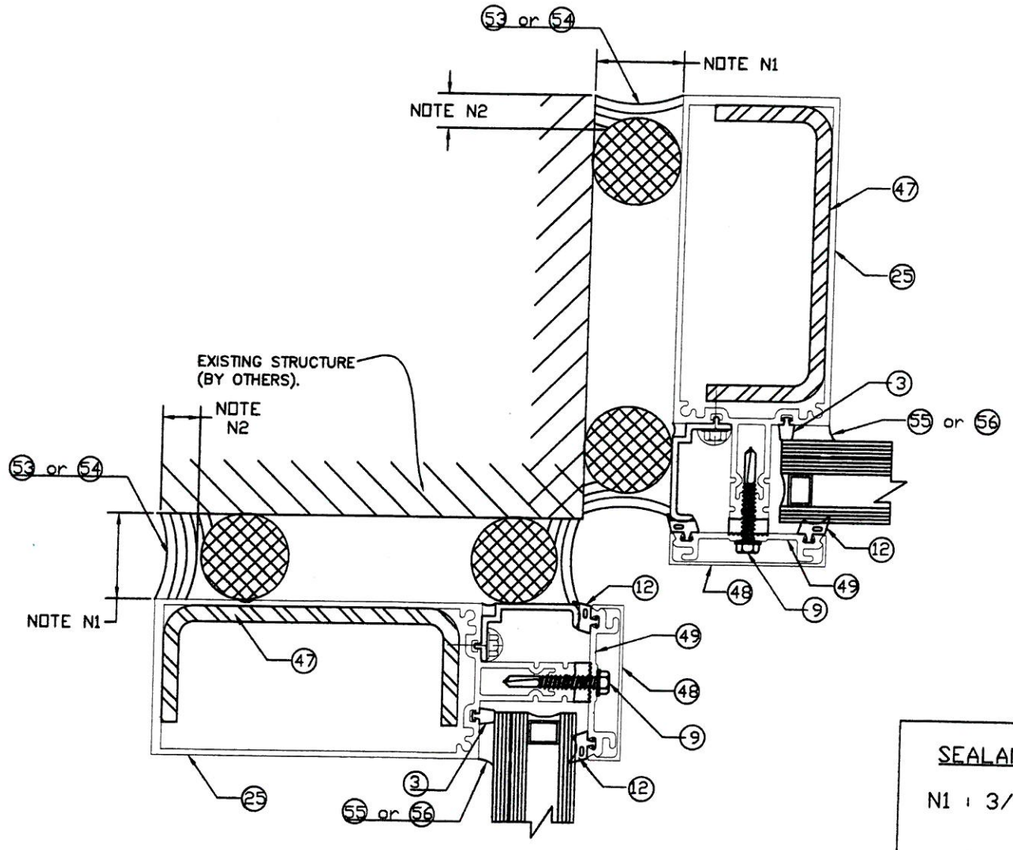

7K
JAMB MULLION AT
INSIDE CORNER

SEALANT JOINT NOTES

N1 : 3/8" MIN. & 1 3/8" MAX. WIDE JOINT W/ SEALANT (53) OR (54)

N2 : 1/4" MIN. & 3/8" MAX. DEPTH JOINT W/ 1/4" DEPTH AT MIDWIDTH OF JOINT W/ SEALANT (53) OR (54)

TEXAS DEPARTMENT OF INSURANCE - 2006

RELIANCE STORMMAX SSG CURTAIN WALL SYSTEM LARGE MISSILE IMPACT INSULATED LAMINATED GLASS

DRAWN BY: F.R.L
10/16/14
DATE

14-079
DRAWING No

SHEET 25 OF 40

Oldcastle BuildingEnvelope®
803 AIRPORT RD. TERRELL TX 75160
www.OldcastleBE.com-Phone 800-869-4567

DESCRIPTION	DATE	SHEET No.

WALTER A. TILLIT Jr P.E.
PROFESSIONAL ENGINEER
6355 N.W 36 STREET, STE. 305
VIRGINIA GARDENS, FL 33166
PHONE(305) 871-1531 FAX (305) 871-1531
TEXAS LIC. # 90691
FIRM REGISTRATION # F-13790

1/5/16

P.E. SEAL/SIGNATURE/DATE

APPLICABILITY OF REQUIRED ANCHORS & FASTENERS FOR MULLION TYPE & SUBSTRATE (SCHEMATIC)

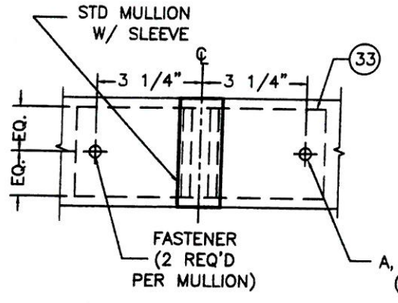

CONCRETE & STEEL

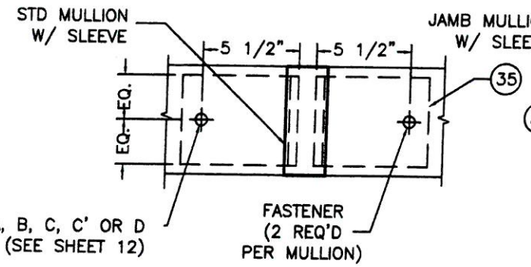

CONCRETE & STEEL

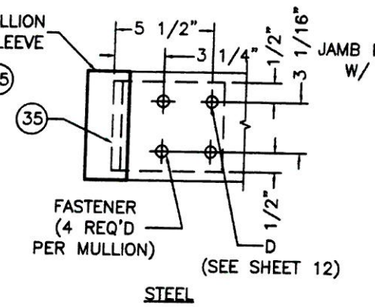

STEEL

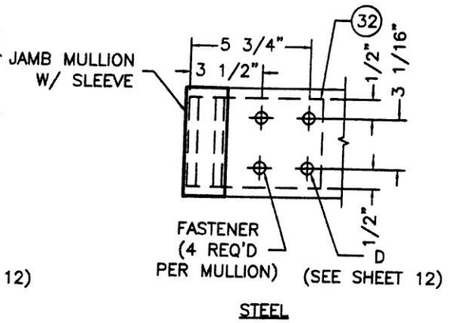

STEEL

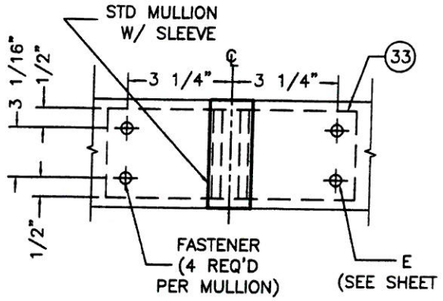

WOOD

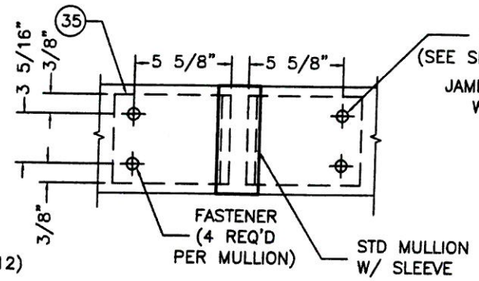

WOOD

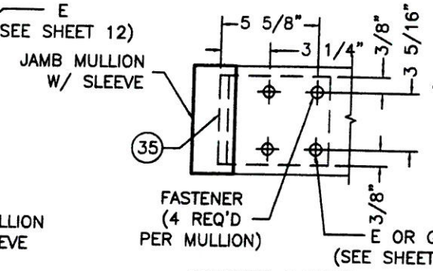

CONCRETE & WOOD

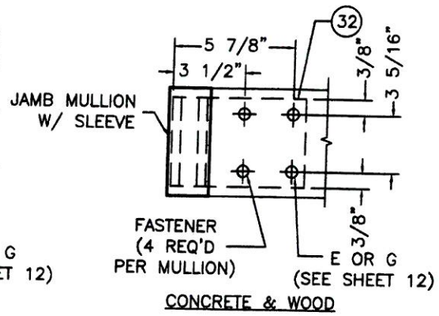

CONCRETE & WOOD

INSTALLATIONS W/ "T" ANCHOR (33)
N.T.S.

INSTALLATIONS W/ "L" ANCHOR (35) * N.T.S.

* LIMITED TO 70 PSF DESIGN LOAD
FOR UP TO 12'-0" MULLION SPAN & 4'-0" SPACING

INSTALLATIONS W/ "F" ANCHOR (32)
N.T.S.

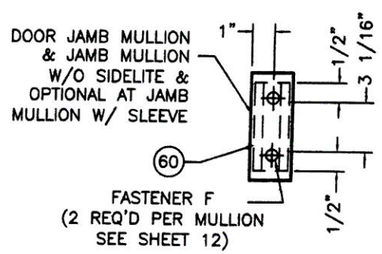

CONCRETE

INSTALLATION OF DOOR JAMB MULLION, JAMB MULLION AT DOOR W/ NON SIDELITE AND OPTIONAL AT JAMB MULLION W/ "U" ANCHOR (60)
N.T.S.

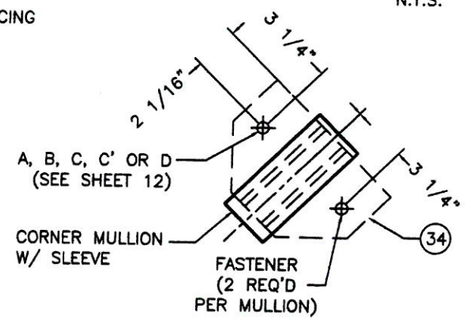

CONCRETE OR STEEL

INSTALLATION OF CORNER MULLION W/ HW-105-02 "T" ANCHOR (34)
N.T.S.

TEXAS DEPARTMENT OF INSURANCE - 2006
RELIANCE STORMMAX SSG CURTAIN WALL SYSTEM LARGE MISSILE IMPACT INSULATED LAMINATED GLASS
DRAWN BY: F.R.L
DATE 10/16/14
14-079 DRAWING No
SHEET 26 OF 40

Oldcastle BuildingEnvelope®
803 AIRPORT RD. TERRELL, TX 75160
www.OldcastleBE.com-Phone 800-869-4567

REV. No.	DESCRIPTION	DATE	APP. BY

WALTER A. TILLIT Jr P.E.
PROFESSIONAL ENGINEER
6355 N.W 36 STREET, STE. 305
VIRGINIA GARDENS, FL 33166
PHONE(305) 871-1530 FAX (305) 871-1531
TEXAS LIC. # 90691
FIRM REGISTRATION # F-13790

P.E. SEAL/SIGNATURE/DATE

10/16/14

JAMB MULLION INTERMEDIATE SUPPORT W/ DEAD & WIND LOAD ANCHOR * AT TWIN SPAN

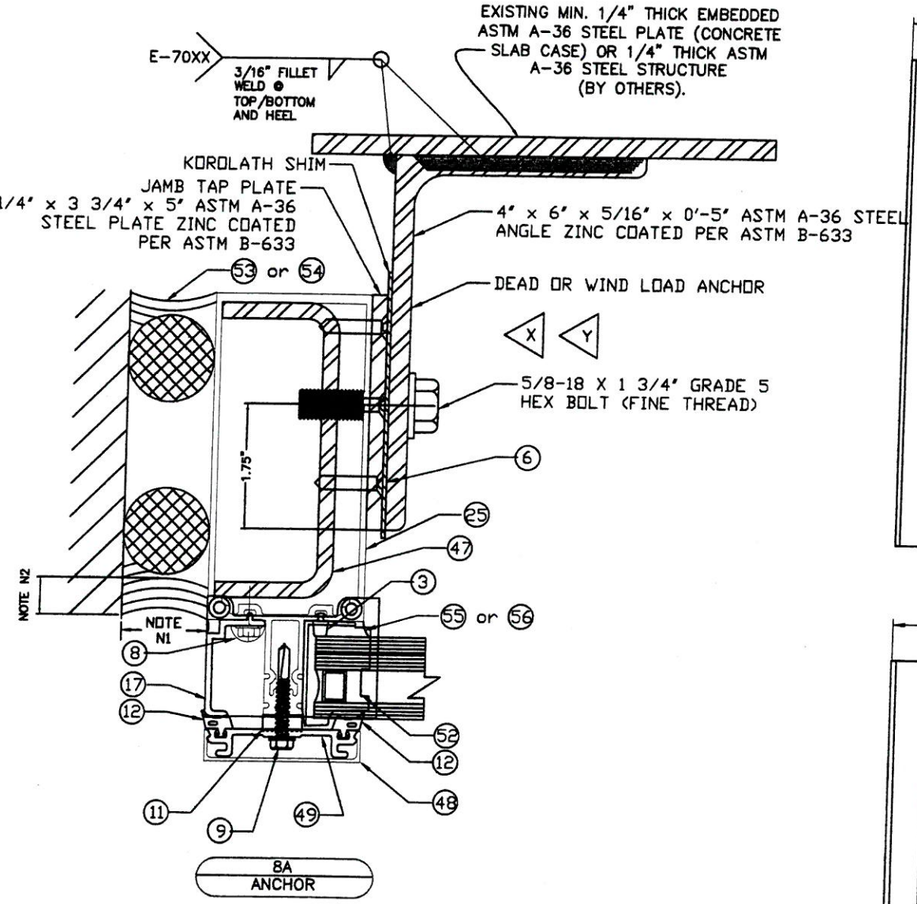

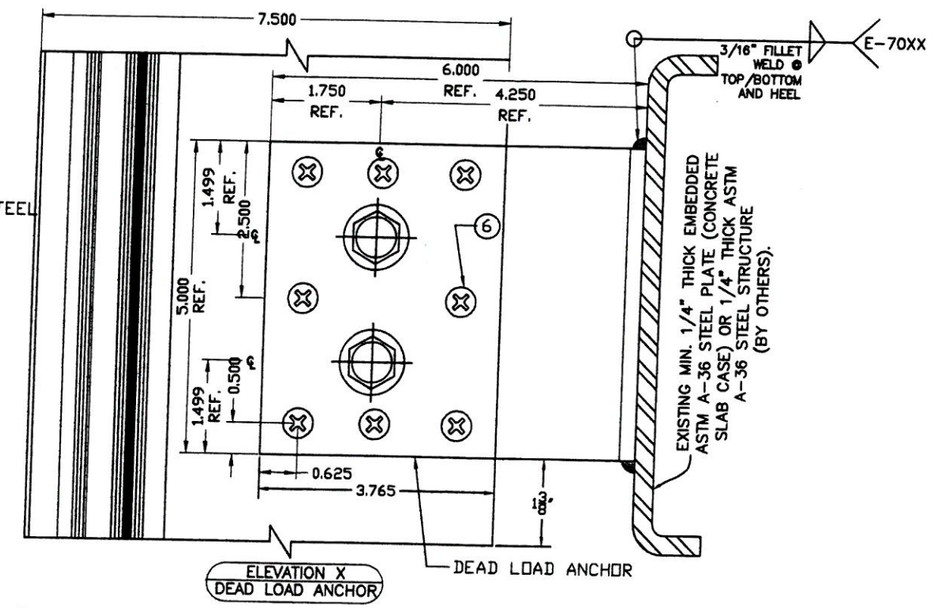

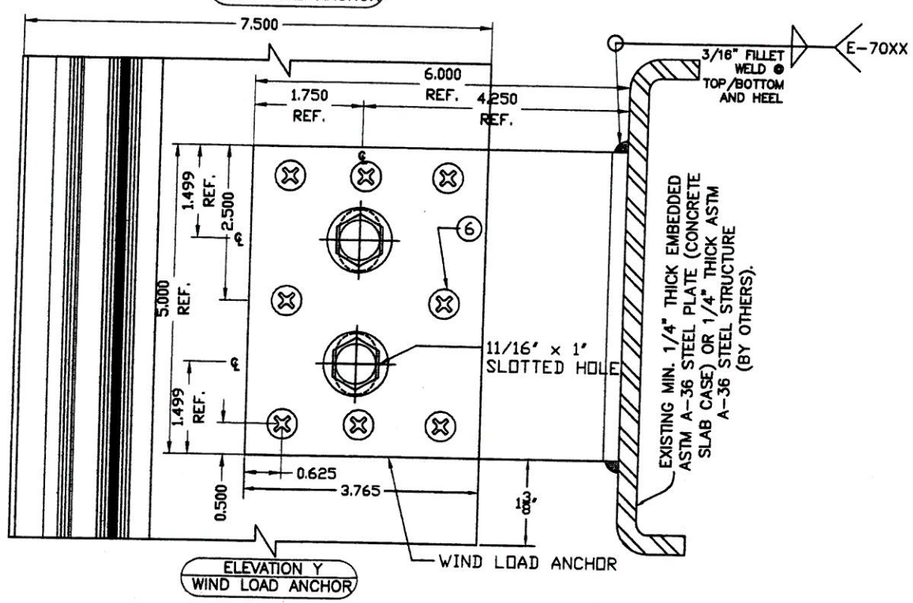

SEALANT JOINT NOTES

N1 : 3/8" MIN. & 1 3/8" MAX. WIDE JOINT W/ SEALANT (53) OR (54)

N2 : 1/4" MIN. & 3/8" MAX. DEPTH JOINT W/ 1/4" DEPTH AT MIDWIDTH OF JOINT W/ SEALANT (53) OR (54)

*ONLY ONE DEADLOAD APPLICATION PER MULTIPLE SPAN MULLION/JAMB, ANY OTHER ANCHOR IN THE SAME MULTIPLE SPAN SHALL ALLOW FREE MOVEMENT DUE TO THERMAL EXPANSION. MULTIPLE SPAN MULLION MAY BE CONNECTED BY SPLICE AS SHOWN ON SHEETS 31 THRU 34.

TEXAS DEPARTMENT OF INSURANCE - 2006

RELIANCE STORMMAX SSG CURTAIN WALL SYSTEM LARGE MISSILE IMPACT INSULATED LAMINATED GLASS

DRAWN BY: F.R.L 10/16/14

DATE

14-079 DRAWING No

SHEET 27 OF 40

Oldcastle BuildingEnvelope
803 AIRPORT RD. TERRELL TX 75160
www.OldcastleBE.com-Phone 800-869-4567

WALTER A. TILLIT Jr P.E.
PROFESSIONAL ENGINEER
6355 N.W 36 STREET, STE. 305
VIRGINIA GARDENS, FL 33166
PHONE(305) 871-1530 FAX (305) 871-1531
TEXAS LIC. # 90691
FIRM REGISTRATION # F-13790

1/5/16

P.E. SEAL/SIGNATURE/DATE

STANDARD MULLION INTERMEDIATE SUPPORT W/ DEAD & WIND LOAD ANCHOR * AT TWIN SPAN

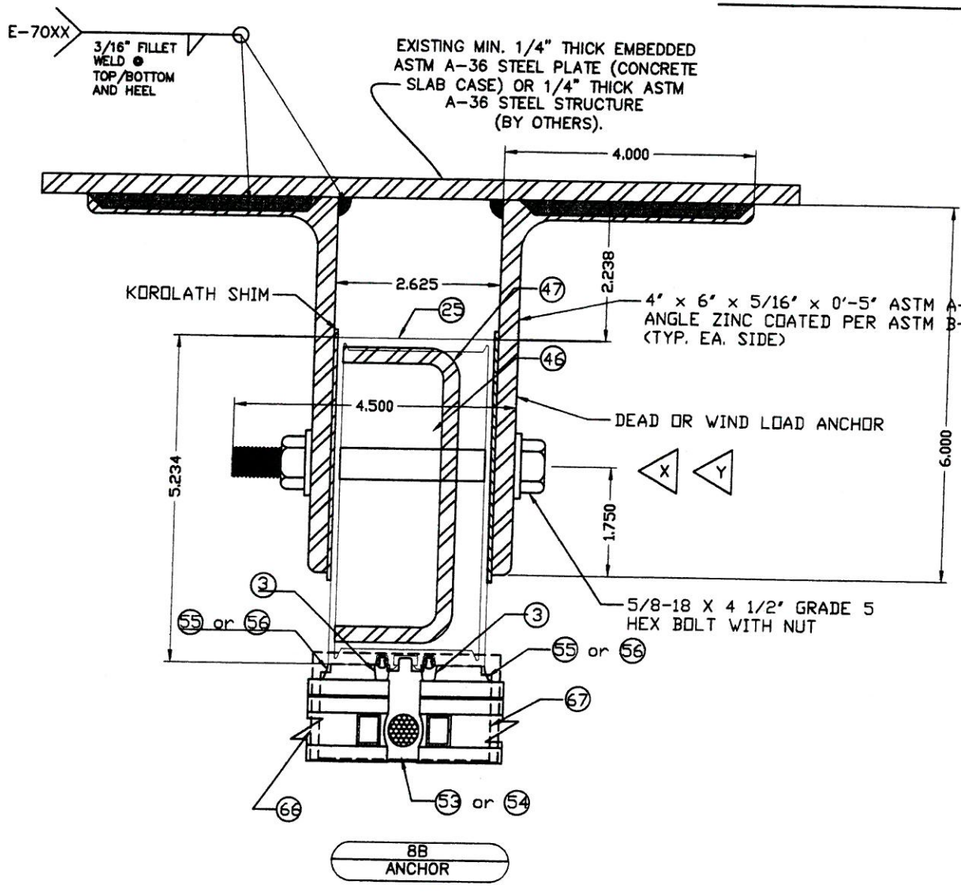

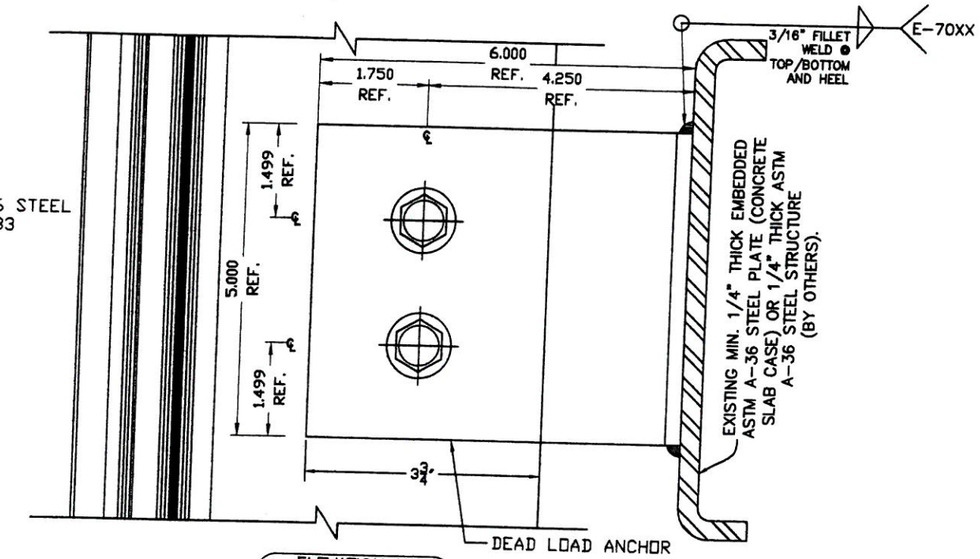

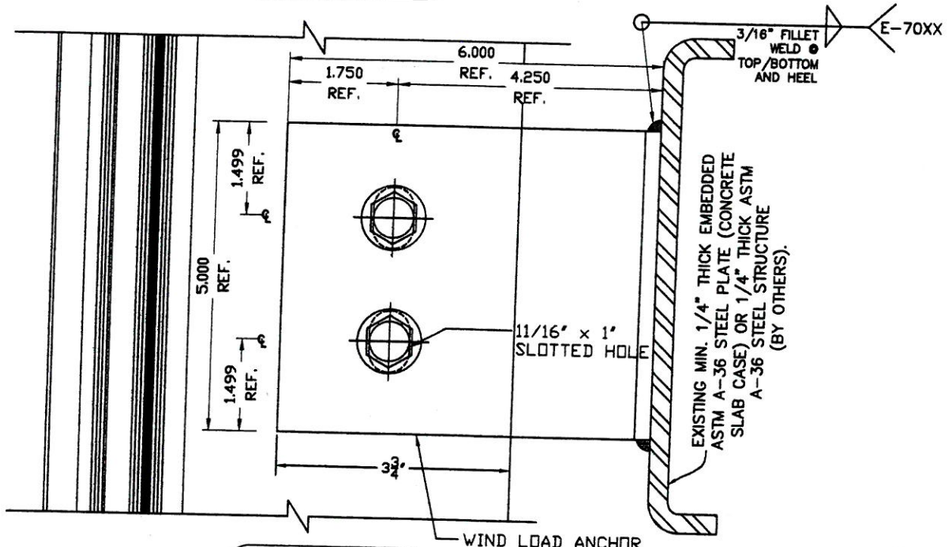

*ONLY ONE DEADLOAD APPLICATION PER MULTIPLE SPAN MULLION/JAMB, ANY OTHER ANCHOR IN THE SAME MULTIPLE SPAN SHALL ALLOW FREE MOVEMENT DUE TO THERMAL EXPANSION. MULTIPLE SPAN MULLION MAY BE CONNECTED BY SPLICE AS SHOWN ON SHEETS 31 THRU 34.

TEXAS DEPARTMENT OF INSURANCE - 2006
RELIANCE STORMMAX SSG CURTAIN WALL SYSTEM LARGE MISSILE IMPACT INSULATED LAMINATED GLASS

DRAWN BY: F.R.L
DATE: 10/16/14
14-079 DRAWING No
SHEET 29 OF 40

Oldcastle BuildingEnvelope
803 AIRPORT RD. TERRELL, TX 75160
www.OldcastleBE.com-Phone 800-869-4567

WALTER A. TILLIT Jr P.E.
PROFESSIONAL ENGINEER
6355 N.W 36 STREET, STE. 305
VIRGINIA GARDENS, FL 33166
PHONE(305) 871-1530 FAX (305) 871-1531
TEXAS LIC. # 90691
FIRM REGISTRATION # F-13790

1/5/16
P.E. SEAL/SIGNATURE/DATE

CORNER MULLION INTERMEDIATE SUPPORT W/ DEAD & WIND LOAD ANCHOR * AT TWIN SPAN

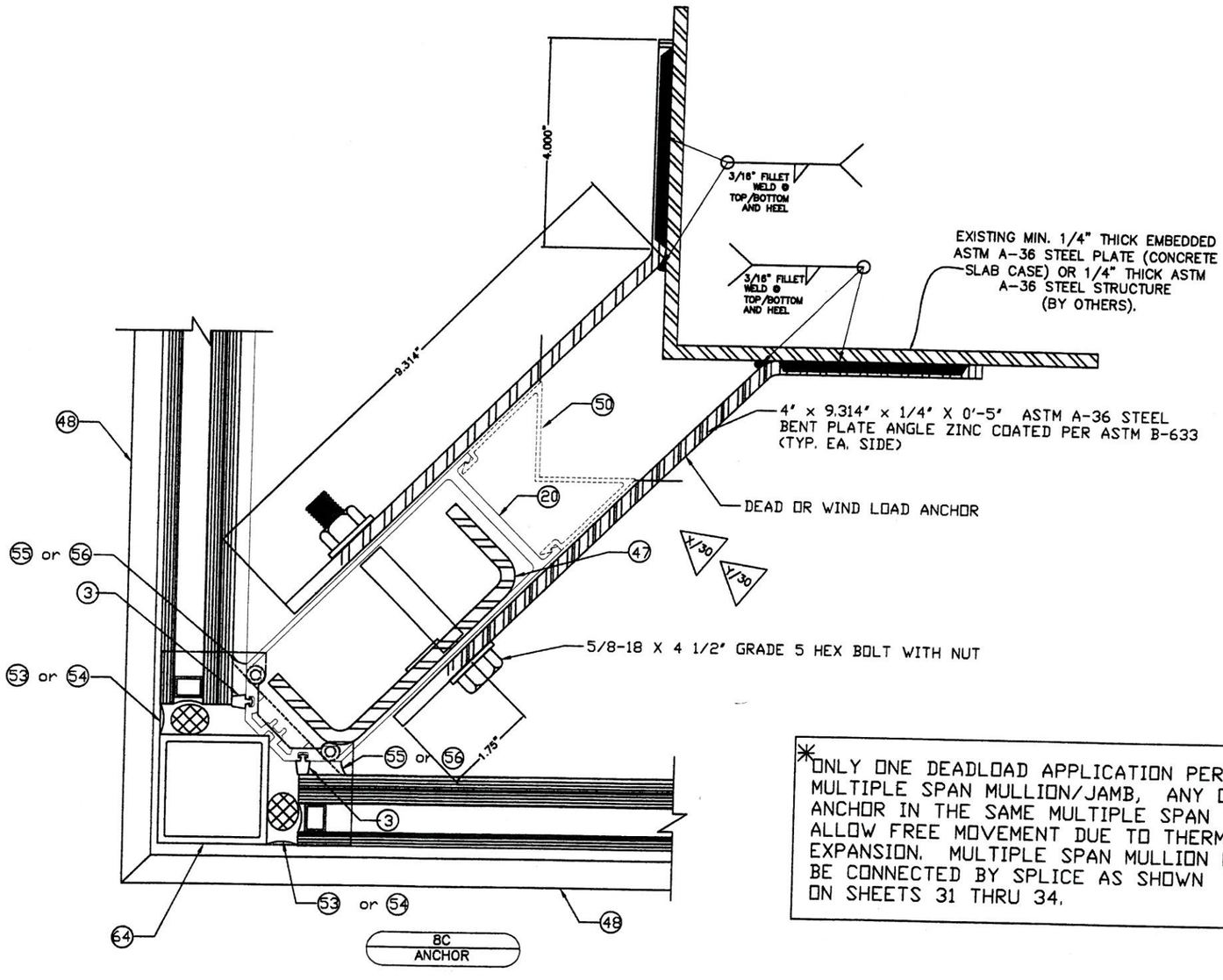

*ONLY ONE DEADLOAD APPLICATION PER MULTIPLE SPAN MULLION/JAMB, ANY OTHER ANCHOR IN THE SAME MULTIPLE SPAN SHALL ALLOW FREE MOVEMENT DUE TO THERMAL EXPANSION. MULTIPLE SPAN MULLION MAY BE CONNECTED BY SPLICE AS SHOWN ON SHEETS 31 THRU 34.

TEXAS DEPARTMENT OF INSURANCE – 2006

RELIANCE STORMMAX SSG CURTAIN WALL SYSTEM LARGE MISSILE IMPACT INSULATED LAMINATED GLASS

DRAWN BY: F.R.L
DATE: 10/16/14

Oldcastle BuildingEnvelope®
803 AIRPORT RD. TERRELL TX 75160
www.OldcastleBE.com-Phone 800-869-4567

14-079
DRAWING No

SHEET 29 OF 40

WALTER A. TILLIT Jr P.E.
PROFESSIONAL ENGINEER
6355 N.W 36 STREET, STE. 305
VIRGINIA GARDENS, FL 33166
PHONE(305) 871-1530 FAX (305) 871-1531
TEXAS LIC. # 90691
FIRM REGISTRATION # F-13790

1/30/16

P.E. SEAL/SIGNATURE/DATE

CORNER MULLION INTERMEDIATE SUPPORT W/ DEAD & WIND LOAD ANCHOR AT TWIN SPAN

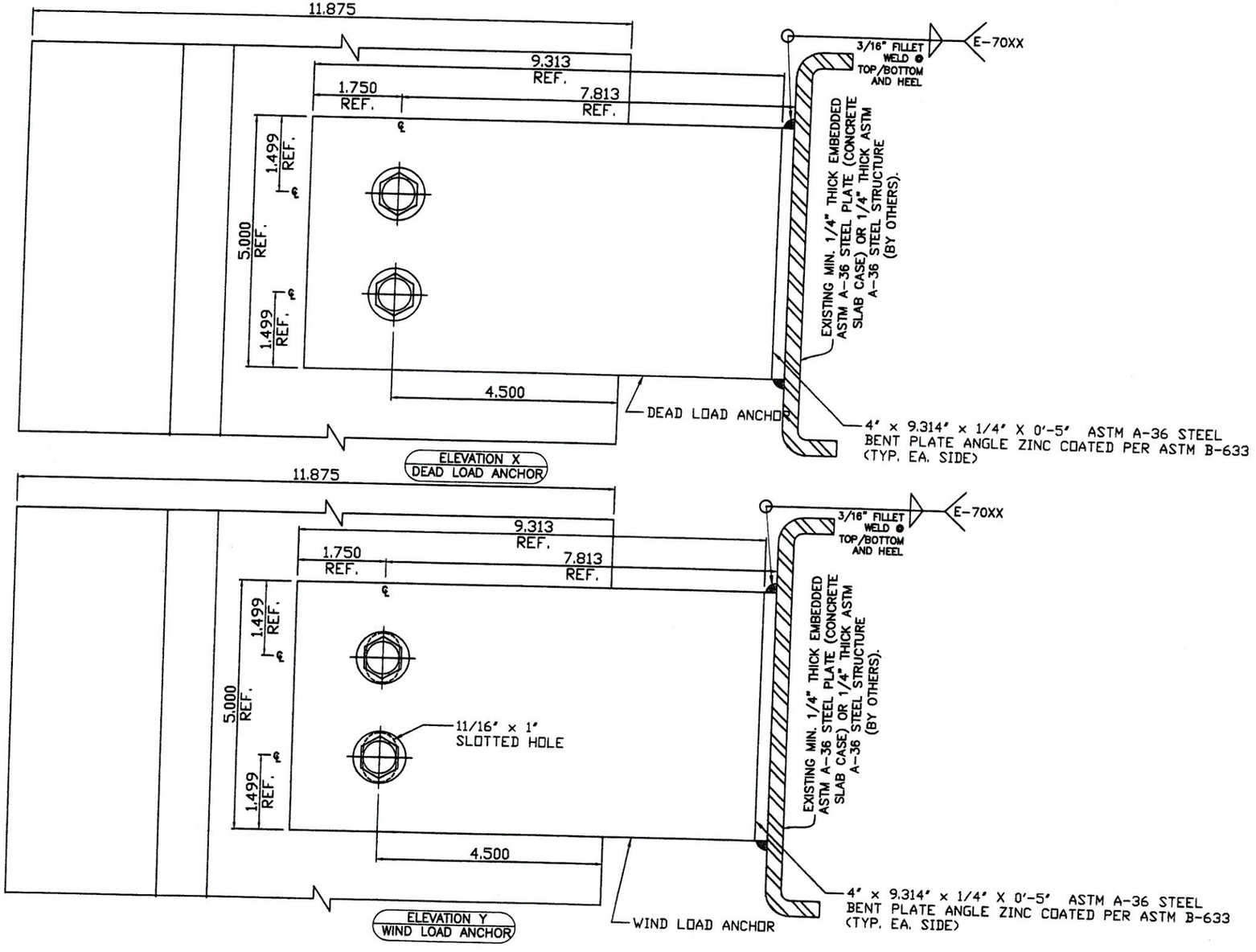

TEXAS DEPARTMENT OF INSURANCE – 2006

RELIANCE STORMMAX SSG CURTAIN WALL SYSTEM LARGE MISSILE IMPACT INSULATED LAMINATED GLASS

DRAWN BY: F.R.L.
DATE: 10/16/14
DRAWING No: 14-079
SHEET 30 OF 40

Oldcastle BuildingEnvelope®
803 AIRPORT RD. TERRELL TX 75160
www.OldcastleBE.com-Phone 800-869-4567

WALTER A. TILLIT Jr P.E.
PROFESSIONAL ENGINEER
6355 N.W. 36 STREET, STE. 305
VIRGINIA GARDENS, FL 33166
PHONE(305) 871-1530 FAX (305) 871-1531
TEXAS LIC. # 90691
FIRM REGISTRATION # F-13790

1/5/16

P.E. SEAL/SIGNATURE/DATE

JAMB AND STANDARD MULLION SPLICE DETAILS AT TWIN SPAN (PLAN)

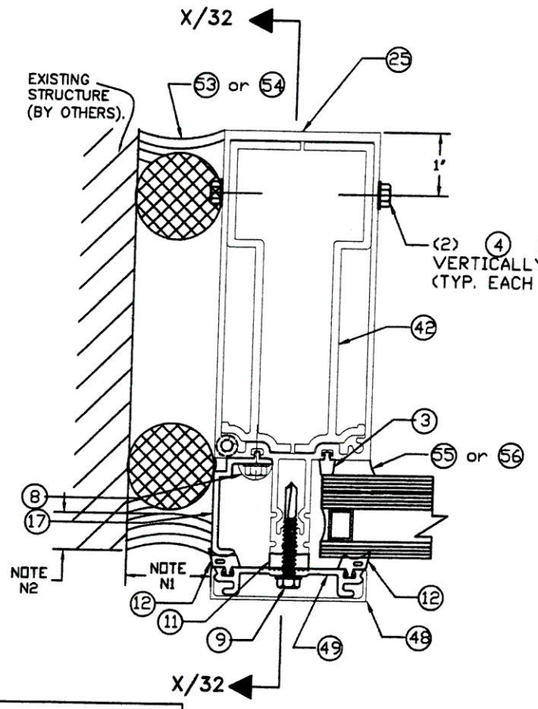

9A
JAMB MULLION SPLICE

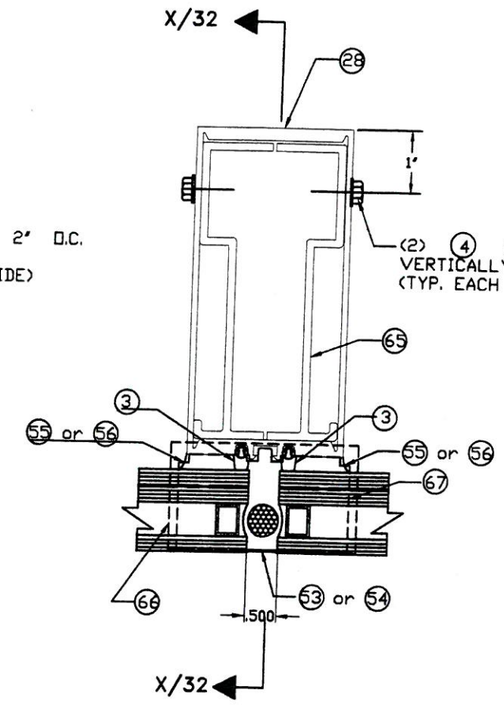

9B
STD HEAVY MULLION SPLICE

SEALANT JOINT NOTES

N1 : 3/8" MIN. & 1 3/8" MAX. WIDE JOINT W/ SEALANT 53 OR 54

N2 : 1/4" MIN. & 3/8" MAX. DEPTH JOINT W/ 1/4" DEPTH AT MIDWIDTH OF JOINT W/ SEALANT 53 OR 54

TEXAS DEPARTMENT OF INSURANCE – 2006

RELIANCE STORMMAX SSG CURTAIN WALL SYSTEM LARGE MISSILE IMPACT INSULATED LAMINATED GLASS

Oldcastle BuildingEnvelope®
803 AIRPORT RD. TERRELL TX 75160
www.OldcastleBE.com-Phone 800-669-4567

DESCRIPTION	DATE	REV. No

DRAWN BY: F.R.L 10/16/14 DATE

14-079 DRAWING No

SHEET 31 OF 40

WALTER A. TILLIT Jr P.E.
PROFESSIONAL ENGINEER
6355 N.W 36 STREET, STE. 305
VIRGINIA GARDENS, FL. 33166
PHONE(305) 871-1530 FAX (305) 871-1531
TEXAS LIC. # 90691
FIRM REGISTRATION # F-13790

1/5/16

P.E. SEAL/SIGNATURE/DATE

JAMB AND STANDARD MULLION SPLICE SECTION AT TWIN SPAN

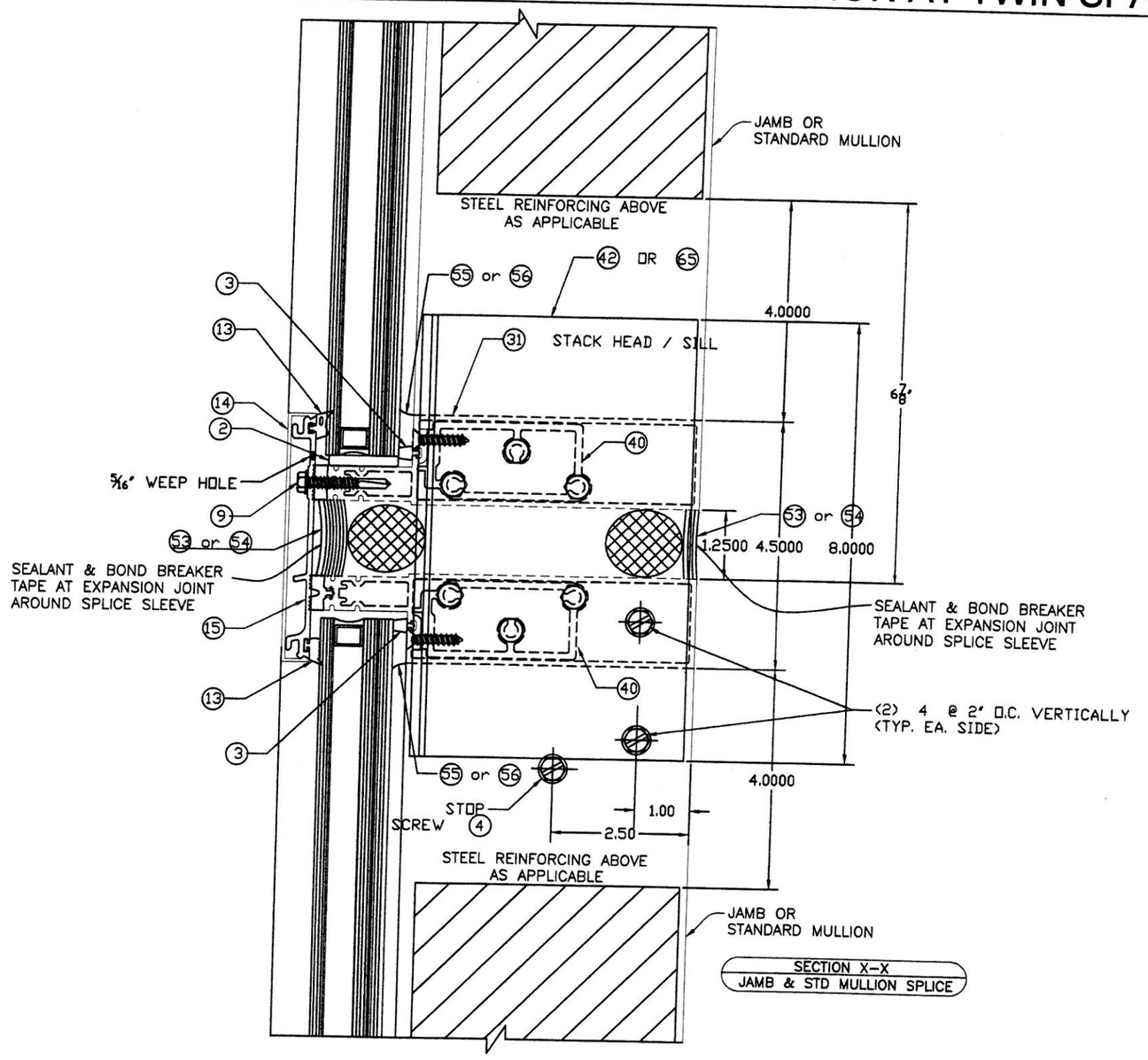

SECTION X-X
JAMB & STD MULLION SPLICE

TEXAS DEPARTMENT OF INSURANCE - 2006

RELIANCE STORMMAX SSG CURTAIN
WALL SYSTEM LARGE MISSILE IMPACT
INSULATED LAMINATED GLASS

Oldcastle BuildingEnvelope
803 AIRPORT RD. TERRELL TX 75160
www.OldcastleBE.com-Phone 800-869-4567

DRAWN BY: F.R.L
10/16/14
DATE
14-079
DRAWING No
SHEET 32 OF 40

WALTER A. TILLIT Jr P.E.
PROFESSIONAL ENGINEER
6355 N.W 36 STREET, STE. 305
VIRGINIA GARDENS, FL 33166
PHONE(305) 871-1530 FAX (305) 871-1531
TEXAS LIC. # 90691
FIRM REGISTRATION # F-13790

1/5/16

P.E. SEAL/SIGNATURE/DATE

CORNER MULLION SPLICE DETAIL AT TWIN SPAN (PLAN)

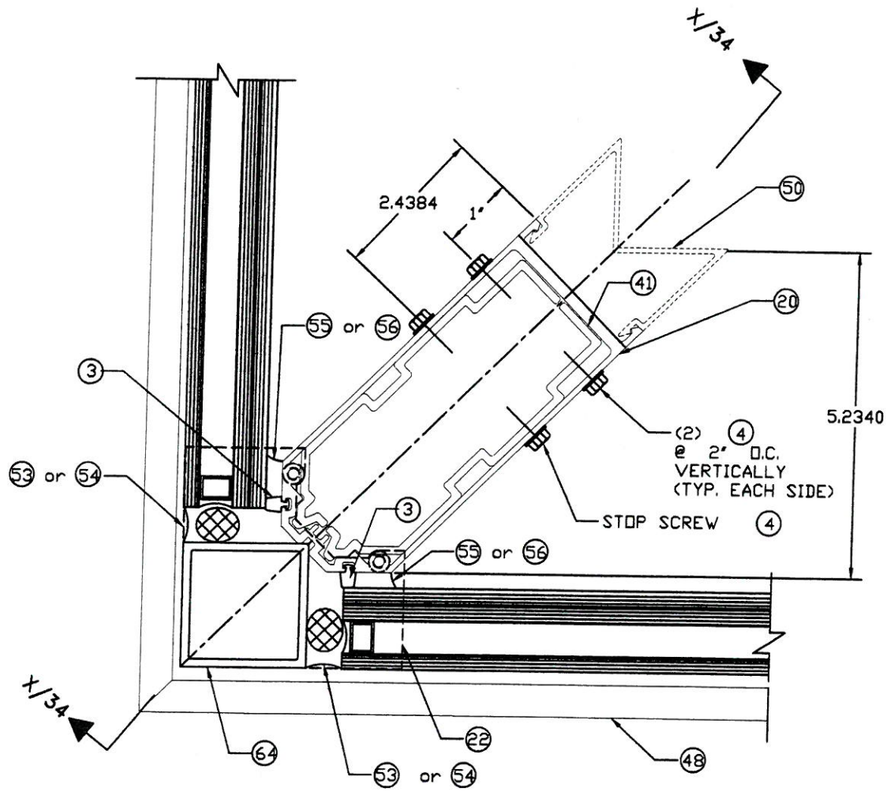

9D
CORNER MULLION SPLICE

TEXAS DEPARTMENT OF INSURANCE - 2006

RELIANCE STORMMAX SSG CURTAIN WALL SYSTEM LARGE MISSILE IMPACT INSULATED LAMINATED GLASS

DRAWN BY: F.P.L. 10/16/14

DATE

14-079 DRAWING No

SHEET 33 OF 40

Oldcastle BuildingEnvelope®
803 AIRPORT RD. TERRELL TX 75160
www.Oldcastle-BE.com-Phone 800-869-4567

MFR. No.	DESCRIPTION	DATE	MFR. No.	DESCRIPTION	DATE

WALTER A. TILLIT Jr P.E.
PROFESSIONAL ENGINEER
6355 N.W 36 STREET, STE. 305
VIRGINIA GARDENS, FL 33166
PHONE(305) 871-1531 FAX (305) 871-1530
TEXAS LIC. # 90691
FIRM REGISTRATION # F-13790

1/5/16

P.E. SEAL/SIGNATURE/DATE

CORNER MULLION SPLICE SECTION AT TWIN SPAN

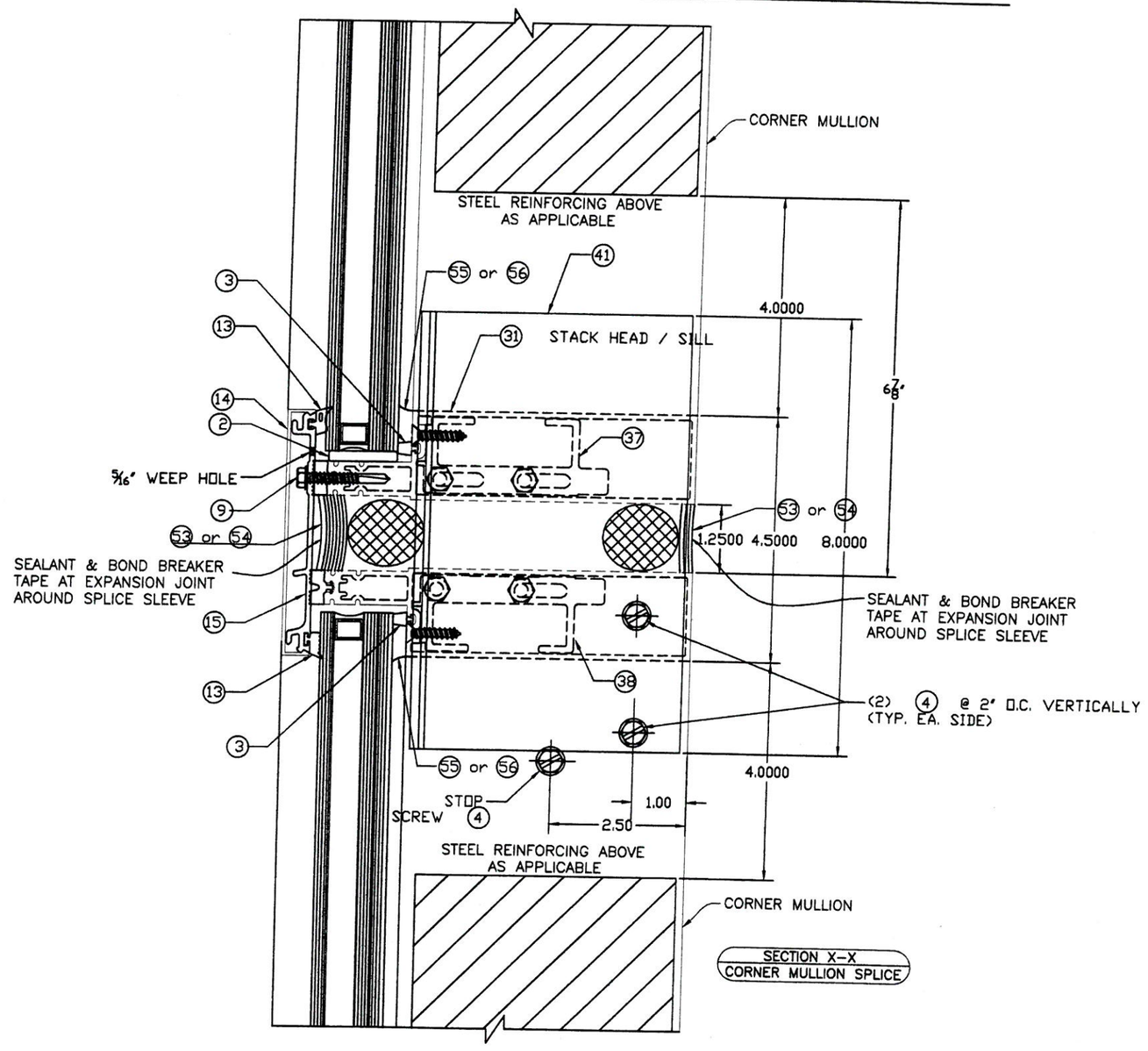

SECTION X-X
CORNER MULLION SPLICE

TEXAS DEPARTMENT OF INSURANCE - 2006

RELIANCE STORMMAX SSG CURTAIN WALL SYSTEM LARGE MISSILE IMPACT INSULATED LAMINATED GLASS

DRAWN BY: F.R.L
10/16/14

DATE

14-079
DRAWING No

SHEET 34 OF 40

Oldcastle BuildingEnvelope
803 AIRPORT RD. TERRELL TX 75160
www.OldcastleBEcom-Phone 800-869-4567

MFR. No	DESCRIPTION	DATE

MFR. No	DESCRIPTION	DATE

WALTER A. TILLIT Jr P.E.
PROFESSIONAL ENGINEER
6355 N.W 36 STREET, STE. 305
VIRGINIA GARDENS, FL 33166
PHONE(305) 871-1531 FAX (305) 871-1531
TEXAS LIC. # 90691
FIRM REGISTRATION # F-13790

1/5/16

P.E. SEAL/SIGNATURE/DATE

DOOR HEADER CONNECTION TO CURTAIN WALL HORIZONTALS

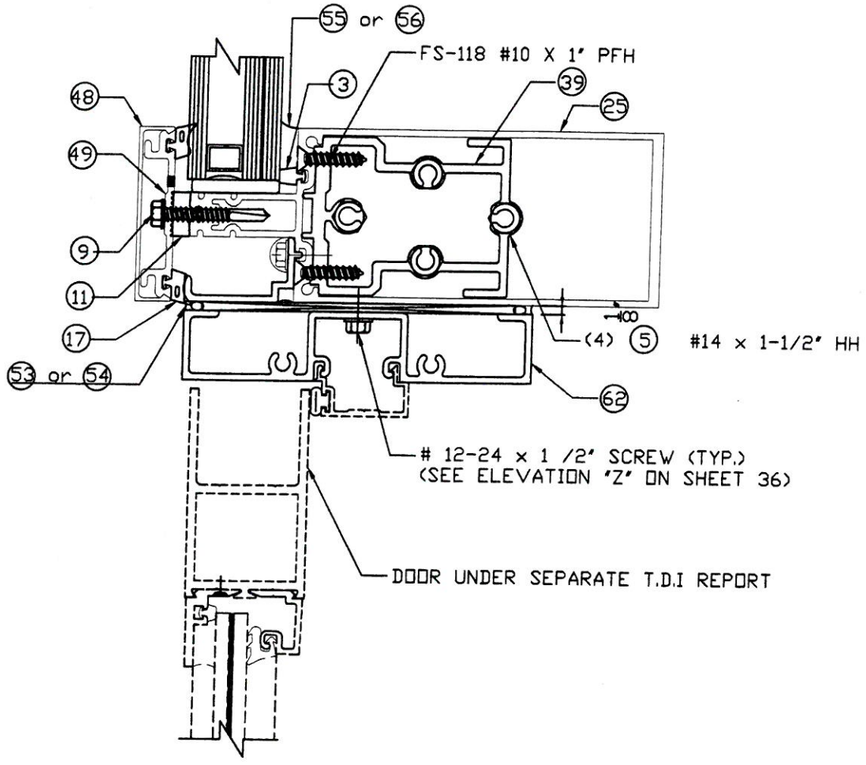

10
DOOR HEADER

TEXAS DEPARTMENT OF INSURANCE - 2006

RELIANCE STORMMAX SSG CURTAIN
WALL SYSTEM LARGE MISSILE IMPACT
INSULATED LAMINATED GLASS

DRAWN BY: F.R.L
DATE: 10/16/14

Oldcastle BuildingEnvelope®
803 AIRPORT RD. TERRELL, TX 75160
www.OldcastleBE.com-Phone 800-869-4567

14-079
DRAWING No

SHEET 35 OF 40

WALTER A. TILLIT Jr P.E.
PROFESSIONAL ENGINEER
6355 N.W 36 STREET, STE. 305
VIRGINIA GARDENS, FL 33166
PHONE(305) 871-1530 FAX (305) 871-1531
TEXAS LIC. # 90691
FIRM REGISTRATION # F-13790

P.E. SEAL/SIGNATURE/DATE

1/5/16

DOOR JAMBS CONNECTION TO CURTAIN WALL

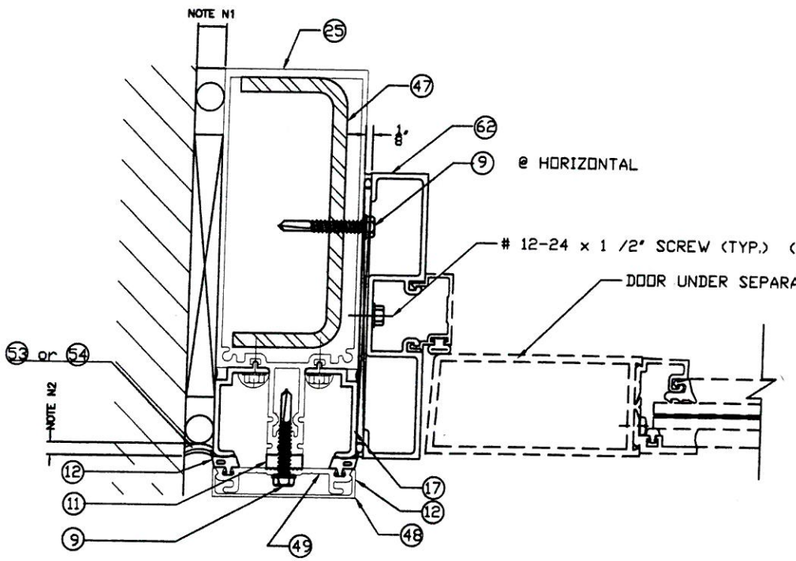

JAMB MULLION ANCHORING DETAILS NON SIDELITE AT EXISTING STRUCTURE

11
JAMB MULLION W/ NON SIDELITE CONDITION

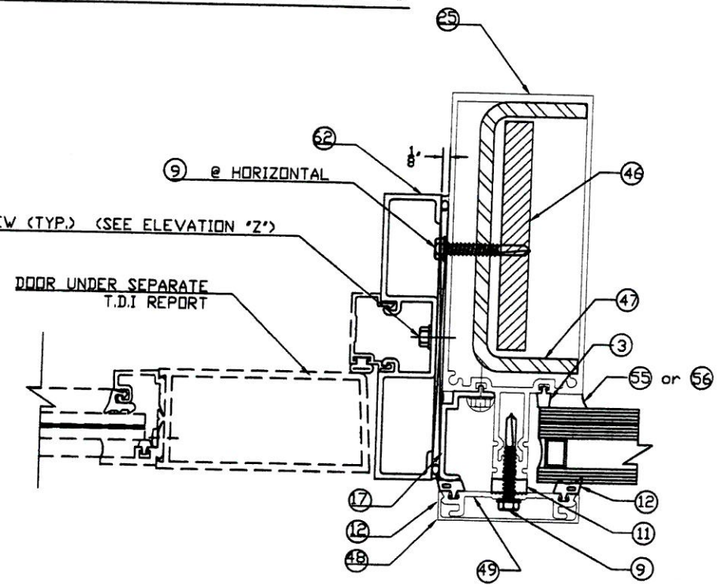

DOOR JAMB MULLION ANCHORING DETAILS WITH SIDELITE AT CURTAIN WALL

12
DOOR JAMB MULLION AT CURTAIN WALL

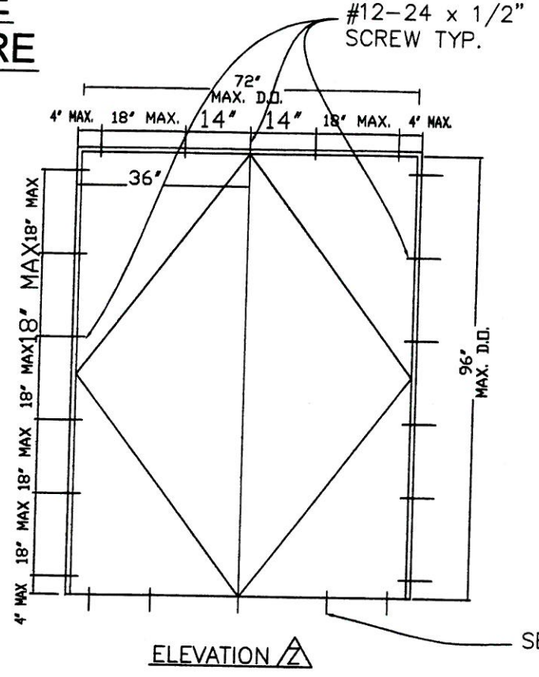

SEALANT JOINT NOTES *

N1 : 3/8" MIN. & 1 3/8" MAX. WIDE JOINT W/ SEALANT (53) OR (54)

N2 : 1/4" MIN. & 3/8" MAX. DEPTH JOINT W/ 1/4" DEPTH AT MIDWIDTH OF JOINT W/ SEALANT (53) OR (54)

* INDICATED MAXIMUM AND MINIMUM VALUES FOR SPECIFIED SEALANT VERTICAL JOINT WIDTH AT JAMBS PER NOTES N1 & N2 HAVE BEEN DETERMINED ONLY TAKING INTO CONSIDERATION THE ACTUAL MOVEMENT OF GLASS WALL AT JAMBS DUE TO THERMAL, WIND AND ITS OWN CONSTRUCTION TOLERANCE, AND NOT PERFORMANCE FACTORS FROM THE SURROUNDING STRUCTURE.

LOCATIONS FOR DOOR FRAME ATTACHMENTS
ABOVE DIMENSIONS ARE MAXIMUM SIZES TESTED

TEXAS DEPARTMENT OF INSURANCE – 2006
RELIANCE STORMMAX SSG CURTAIN WALL SYSTEM LARGE MISSILE IMPACT INSULATED LAMINATED GLASS
DRAWN BY: F.R.L
DATE: 10/16/14
DRAWING No: 14-079
SHEET 36 OF 40

Oldcastle BuildingEnvelope®
803 AIRPORT RD. TERRELL TX 75160
www.OldcastleBE.com-Phone 800-869-4567

REV. No.	DESCRIPTION	DATE
REV. No.	DESCRIPTION	DATE

WALTER A. TILLIT Jr P.E.
PROFESSIONAL ENGINEER
6355 N.W 36 STREET, STE. 305
VIRGINIA GARDENS, FL 33166
PHONE(305) 871-1531 FAX (305) 871-1531
TEXAS LIC. # 90691
FIRM REGISTRATION # F-13790

1/5/16
P.E. SEAL/SIGNATURE/DATE

SILL CONNECTION FOR JAMB MULLION AT NON SIDELITE & FOR DOOR JAMB MULLION FOR DOORS INSTALLED AT EXISTING STRUCTURE OR ADJACENT TO CURTAIN WALL

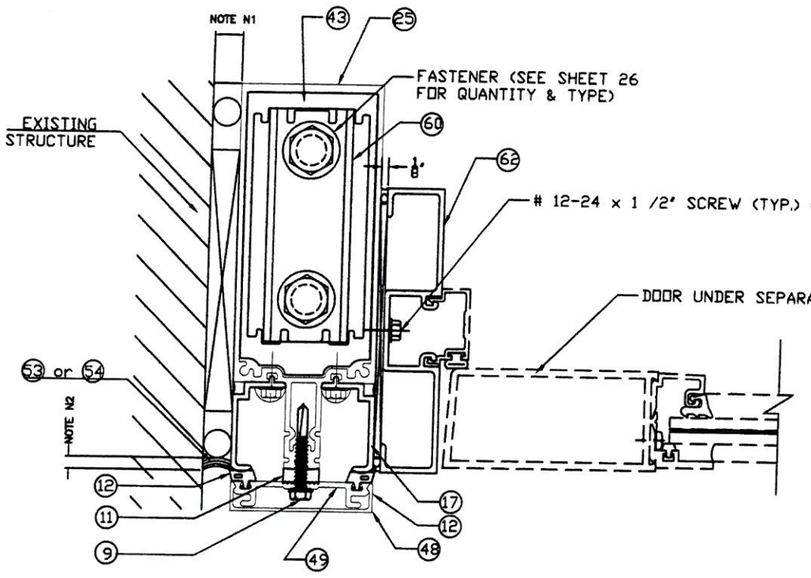

X/38

JAMB MULLION ANCHORING DETAILS NON SIDELITE AT EXISTING STRUCTURE

13

JAMB MULLION W/ NON SIDELITE CONDITION

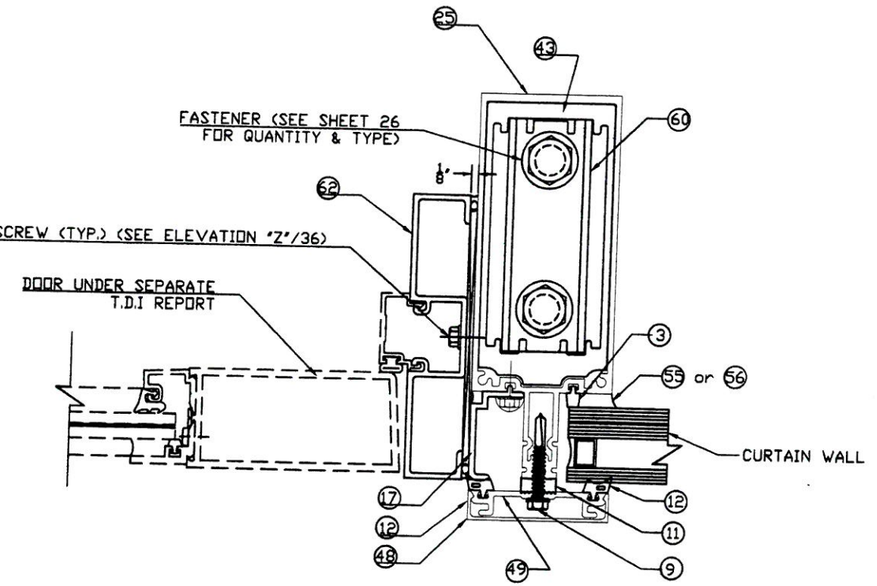

Y/38

DOOR JAMB MULLION ANCHORING DETAILS WITH SIDELITE AT CURTAIN WALL

14

DOOR JAMB MULLION AT CURTAIN WALL

SEALANT JOINT NOTES

N1 : 3/8" MIN. & 1 3/8" MAX. WIDE JOINT W/ SEALANT (53) OR (54)

N2 : 1/4" MIN. & 3/8" MAX. DEPTH JOINT W/ 1/4" DEPTH AT MIDWIDTH OF JOINT W/ SEALANT (53) OR (54)

TEXAS DEPARTMENT OF INSURANCE - 2006

RELIANCE STORMMAX SSG CURTAIN WALL SYSTEM LARGE MISSILE IMPACT INSULATED LAMINATED GLASS

DRAWN BY: F.R.L

DATE 10/16/14

DRAWING No 14-079

SHEET 37 OF 40

Oldcastle BuildingEnvelope®
803 AIRPORT RD. TERRELL, TX 75160
www.OldcastleBE.com-Phone 800-869-4567

WALTER A. TILLIT Jr P.E.
PROFESSIONAL ENGINEER
6355 N.W. 36 STREET, STE. 305
VIRGINIA GARDENS, FL 33166
PHONE(305) 871-1530 FAX (305) 871-1531
TEXAS LIC. # 90691
FIRM REGISTRATION # F-13790

P.E. SEAL/SIGNATURE/DATE

1/5/16

SILL CONNECTION FOR JAMB MULLION (NON SIDELITE) & DOOR JAMB MULLION FOR DOORS INSTALLED AT EXISTING STRUCTURE OR ADJACENT TO CURTAIN WALL

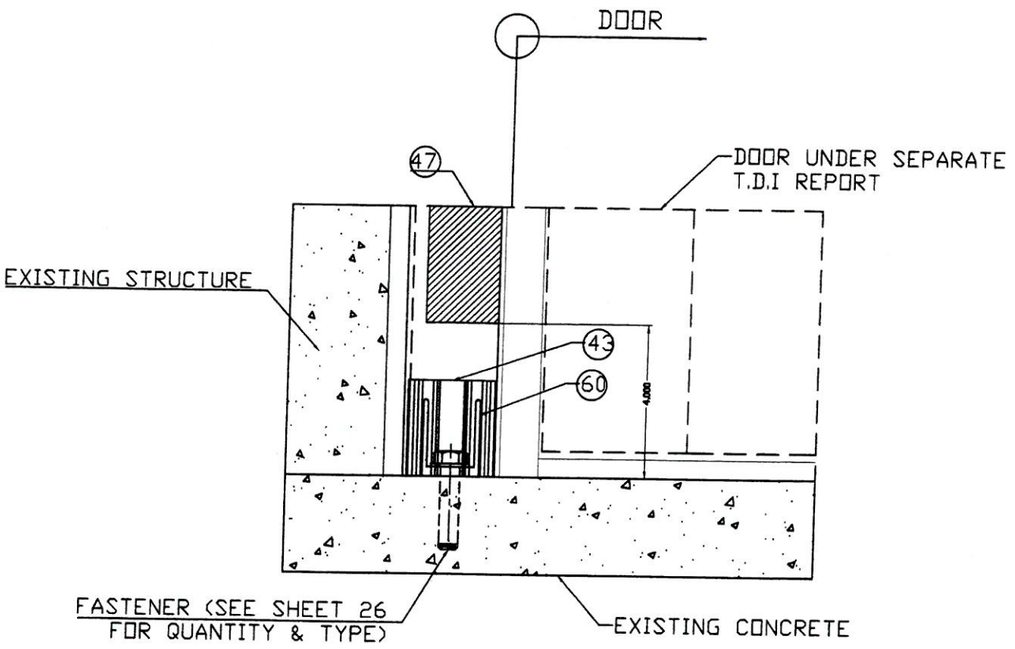

JAMB MULLION ANCHORING DETAIL AT NON SIDELITE CONDITION

ELEVATION X-X

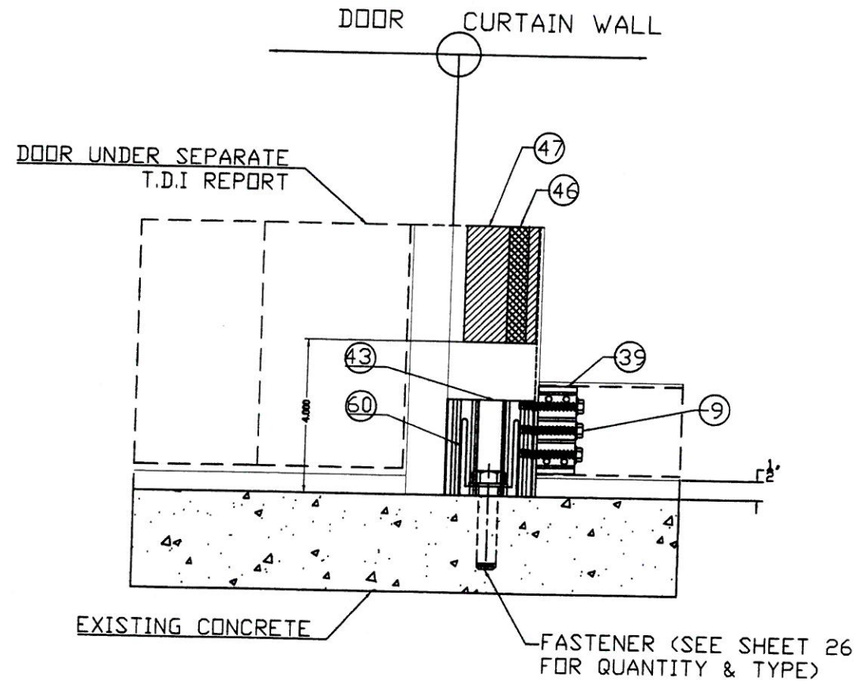

DOOR JAMB MULLION ANCHORING DETAIL WITH SIDELITE CONDITION

ELEVATION Y-Y

TEXAS DEPARTMENT OF INSURANCE - 2006

RELIANCE STORMMAX SSG CURTAIN WALL SYSTEM LARGE MISSILE IMPACT INSULATED LAMINATED GLASS

DRAWN BY: F.R.L

DATE: 10/16/14

DRAWING No: 14-079

SHEET 38 OF 40

Oldcastle BuildingEnvelope®
803 AIRPORT RD. TERRELL, TX 75160
www.OldcastleBE.com-Phone 800-869-4567

MFR. No.	DESCRIPTION	MFR. No.	DESCRIPTION	DATE

WALTER A. TILLIT Jr P.E.
PROFESSIONAL ENGINEER
6355 N.W 36 STREET, STE. 305
VIRGINIA GARDENS, FL 33166
PHONE(305) 871-1530 FAX (305) 871-1531
TEXAS LIC. # 90691
FIRM REGISTRATION # F-13790

1/5/16

P.E. SEAL/SIGNATURE/DATE

BRIDGE AND ZONE PLUG INSTALLATION

STEP 1

Trim off nubs with needle nose pliers.

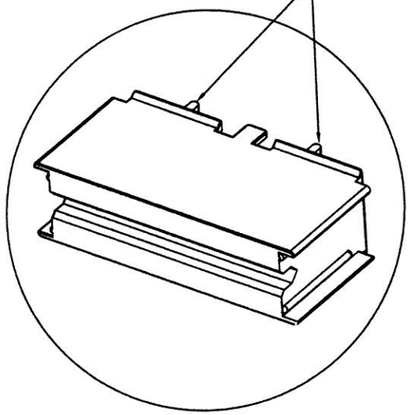

WW-350 Zone Bridge

STEP 2

Seal along tongue of horizontal and across face of mullion before installing zone bridge.

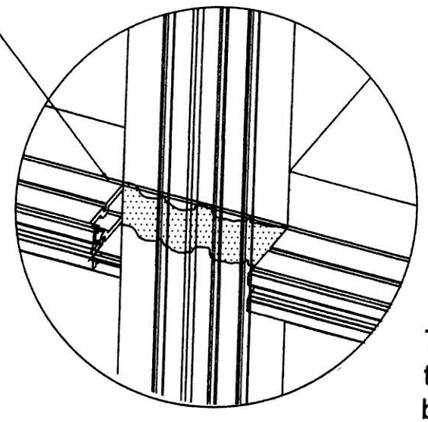

STEP 3

Force sealant into all races on face of mullion.

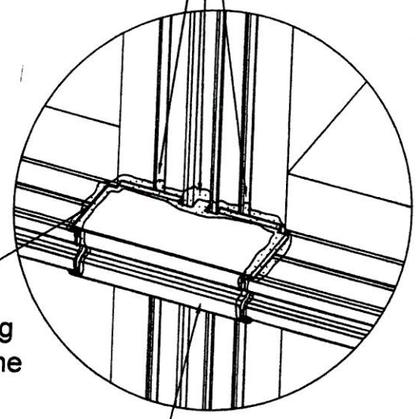

Tool sealant along top & sides of zone bridge to form a water tight seal.

WW-350 Zone Bridge

STEP 4

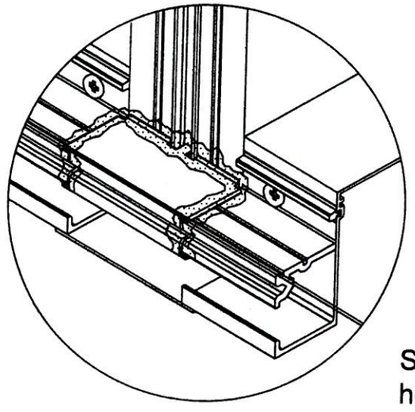

WW-350 Zone Bridge at Sill (Head Similar)

STEP 1

Seal along tongue of horizontal & across face and tongue of mullion before installing WW-352 zone plugs.

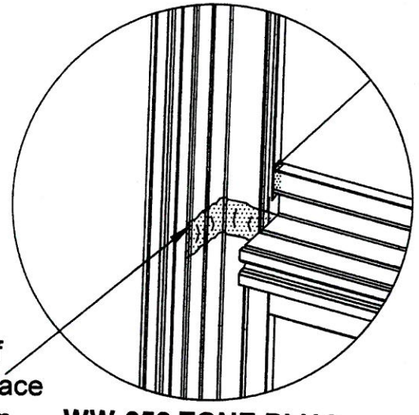

WW-352 ZONE PLUG AT JAMB

STEP 2

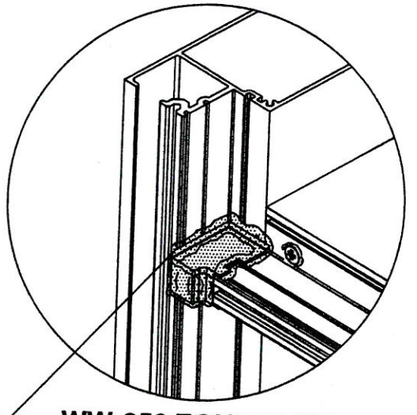

Seal head,jamb & sill zone plugs

WW-352 ZONE PLUG AT JAMB

TEXAS DEPARTMENT OF INSURANCE - 2006

RELIANCE STORMMAX SSG CURTAIN WALL SYSTEM LARGE MISSILE IMPACT INSULATED LAMINATED GLASS

DRAWN BY: F.R.L

DATE 10/16/14

14-079 DRAWING No

SHEET 39 OF 40

Oldcastle BuildingEnvelope®

803 AIRPORT RD. TERRELL TX 75160
www.OldcastleBE.com-Phone 800-869-4567

MFR. No.	DESCRIPTION	DATE	MFR. No.	DESCRIPTION	DATE

WALTER A. TILLIT Jr P.E.
PROFESSIONAL ENGINEER
6355 N.W. 36 STREET, STE. 305
VIRGINIA GARDENS, FL 33166
PHONE(305) 871-1530 FAX (305) 871-1531
TEXAS LIC. # 90691
FIRM REGISTRATION # F-13790

1/5/16

P.E. SEAL/SIGNATURE/DATE

PRESSURE PLATE AND FACE CAP INSTALLATION

FIGURE 1
Glazing Instructions
Horizontal Face Cap Fabrication

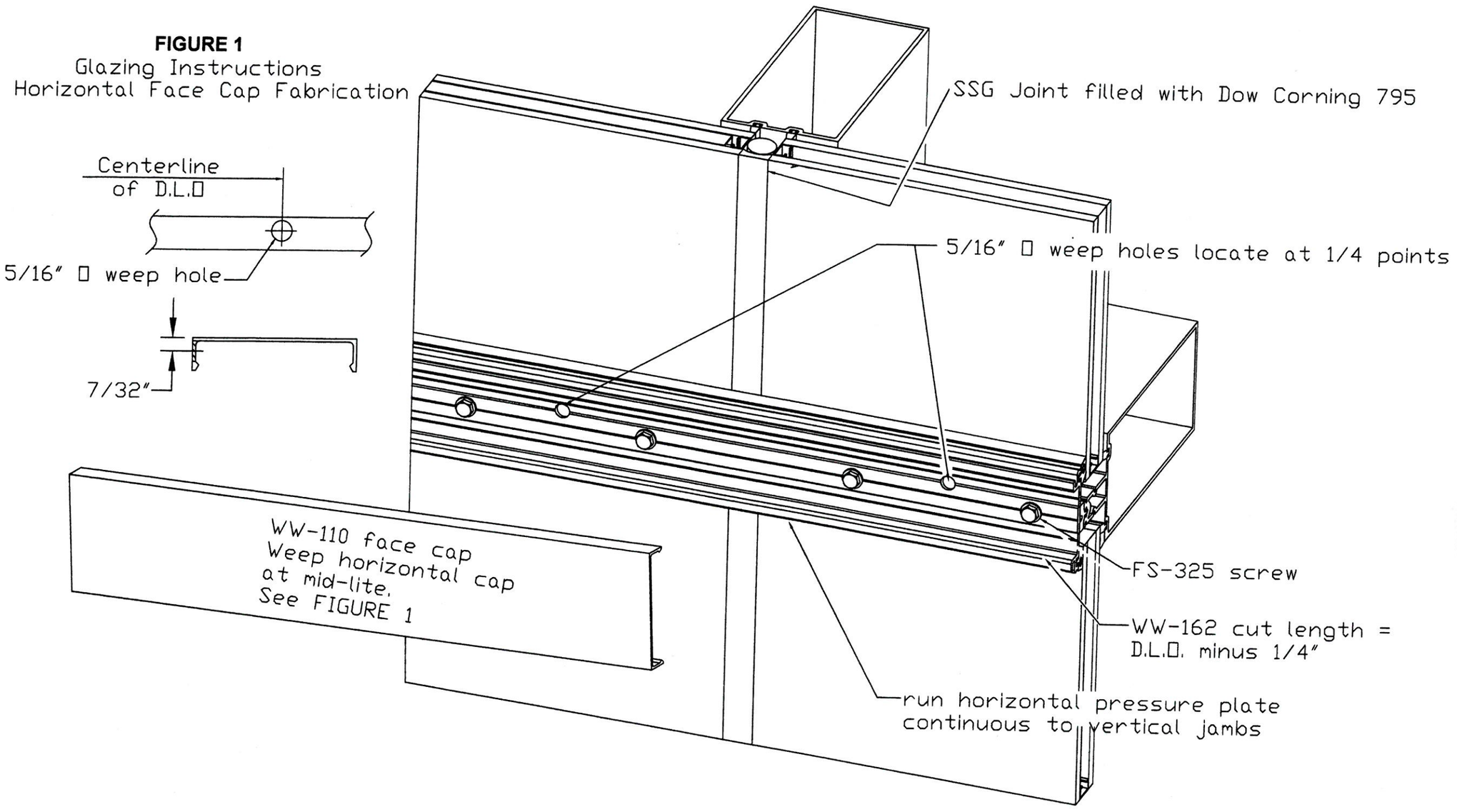

TEXAS DEPARTMENT OF INSURANCE - 2006

RELIANCE STORMMAX SSG CURTAIN WALL SYSTEM LARGE MISSILE IMPACT INSULATED LAMINATED GLASS

DRAWN BY: F.R.L
DATE: 10/16/14
14-079 DRAWING No
SHEET 40 OF 40

Oldcastle BuildingEnvelope®
803 AIRPORT RD. TERRELL TX 75160
www.OldcastleBE.com-Phone 800-869-4567

REV. No	DESCRIPTION	DATE
REV. No	DESCRIPTION	DATE

WALTER A. TILLIT Jr P.E.
PROFESSIONAL ENGINEER
6355 N.W 36 STREET, STE. 305
VIRGINIA GARDENS, FL 33166
PHONE(305) 871-1530 FAX (305) 871-1531
TEXAS LIC. # 90691
FIRM REGISTRATION # F-13790

1/5/15
P.E. SEAL/SIGNATURE/DATE